Jan. 4, 1966 R. R. LAMBERT 3,227,063

CEILING AIR DIFFUSER

Filed Feb. 1, 1962 3 Sheets-Sheet 1

FIG. 1.

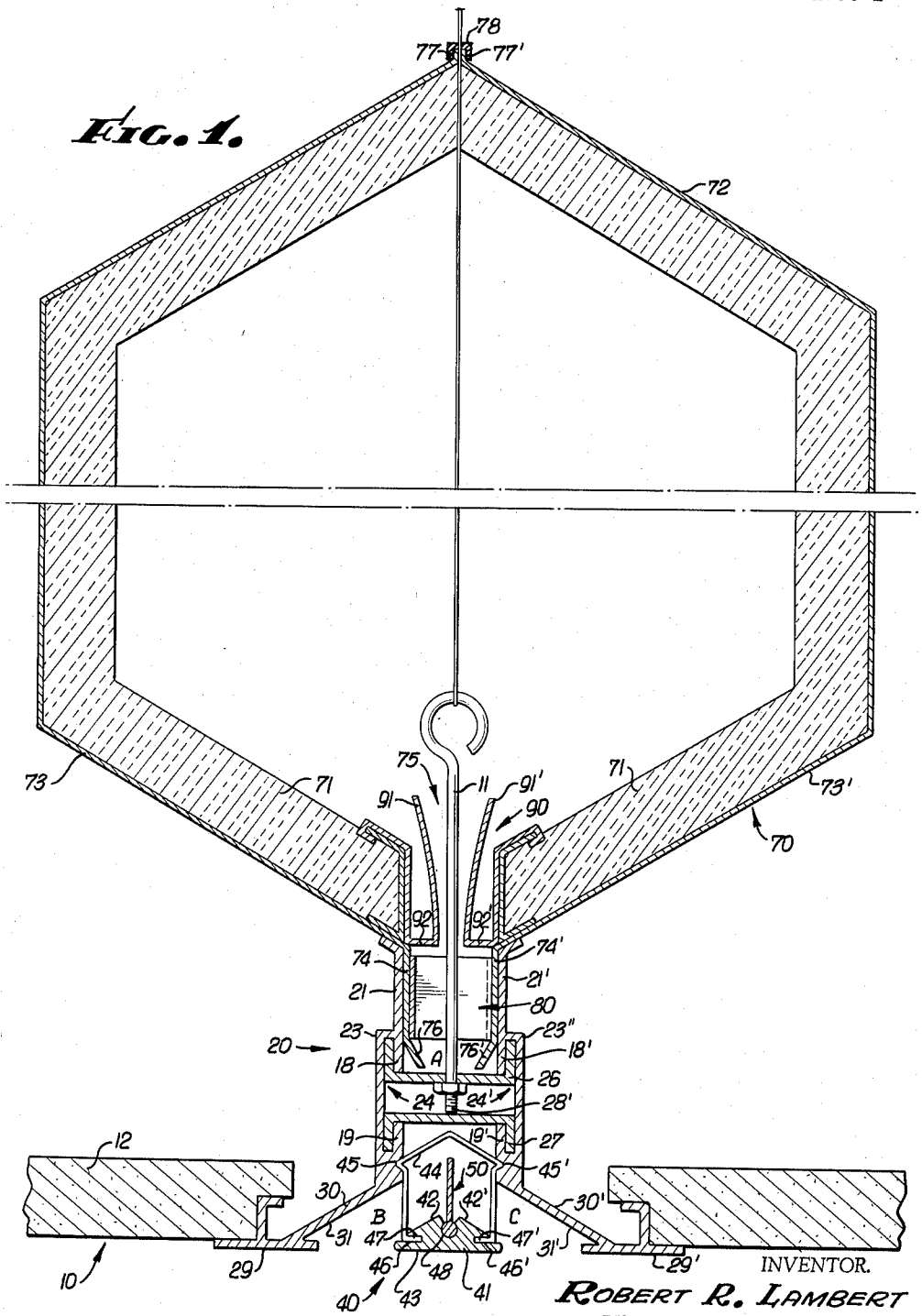

INVENTOR.
ROBERT R. LAMBERT
BY
Miketta and Glenny
ATTORNEYS.

Jan. 4, 1966 R. R. LAMBERT 3,227,063

CEILING AIR DIFFUSER

Filed Feb. 1, 1962 3 Sheets-Sheet 2

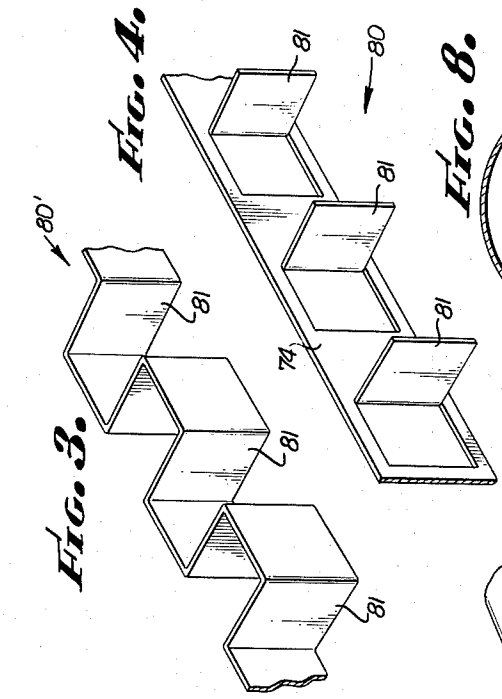

FIG. 3.

FIG. 4.

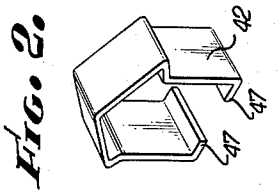

FIG. 2.

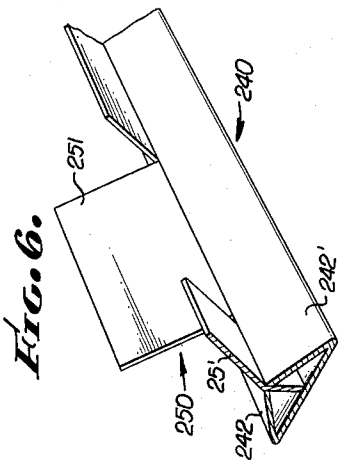

FIG. 6.

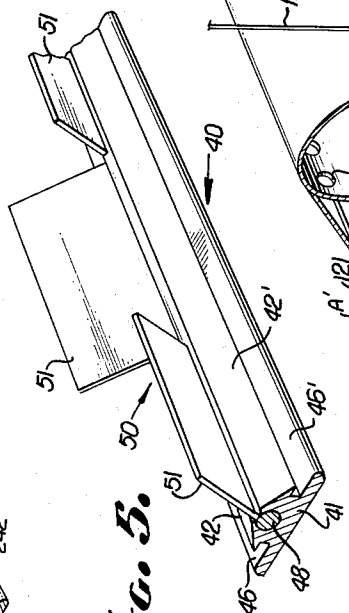

FIG. 5.

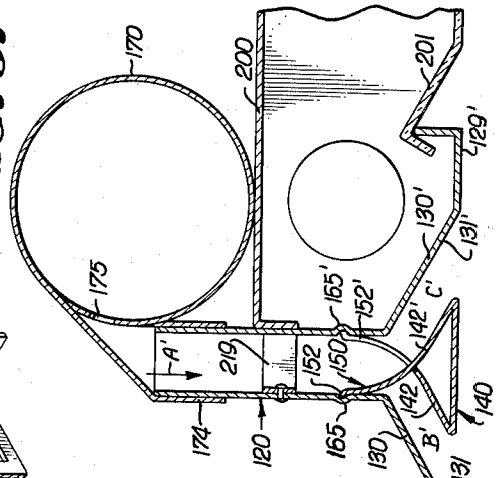

FIG. 8.

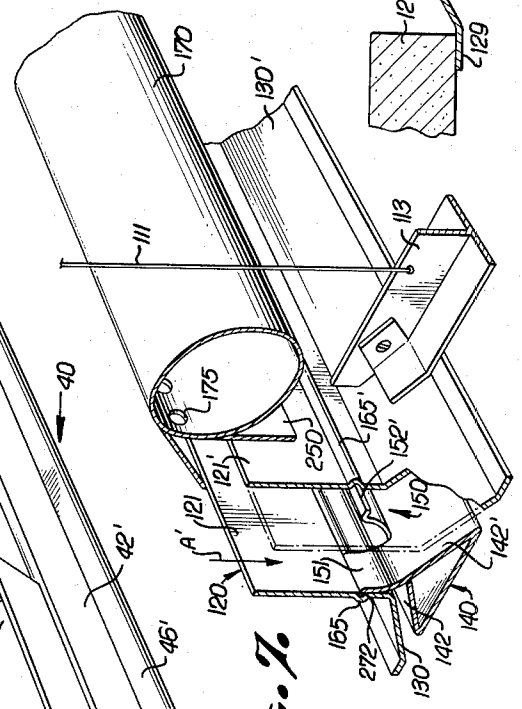

FIG. 7.

INVENTOR.
ROBERT R. LAMBERT
BY
Miketta and Jenney
ATTORNEYS.

Jan. 4, 1966 R. R. LAMBERT 3,227,063

CEILING AIR DIFFUSER

Filed Feb. 1, 1962 3 Sheets-Sheet 3

FIG. 9.

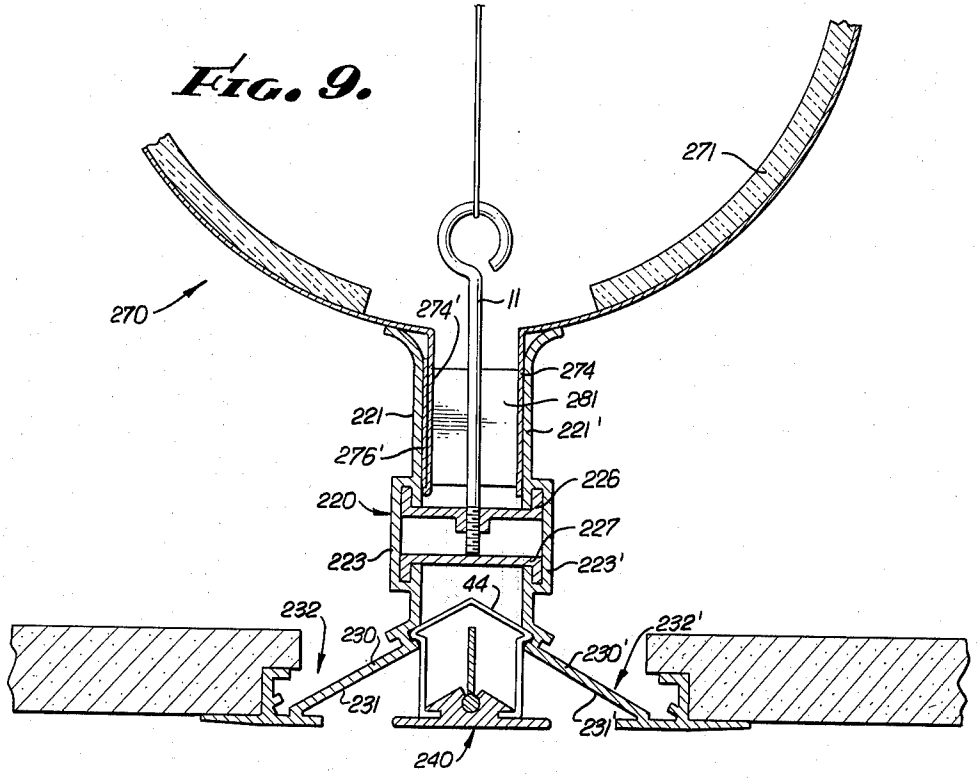

FIG. 10.

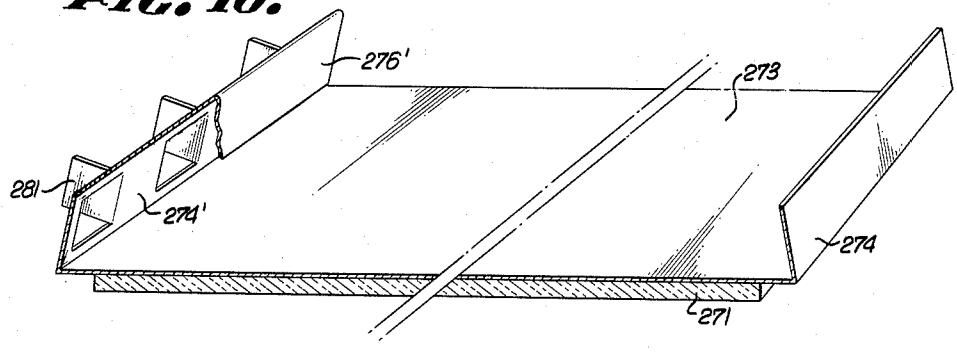

FIG. 11.

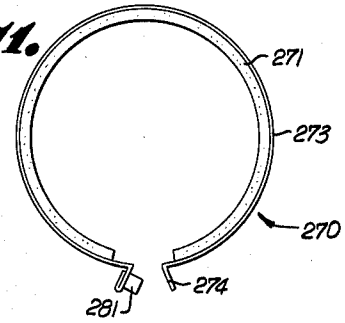

INVENTOR.
ROBERT R. LAMBERT
BY
Miketta and Glenny
ATTORNEYS.

United States Patent Office

3,227,063

Patented Jan. 4, 1966

3,227,063

CEILING AIR DIFFUSER

Robert R. Lambert, Glendora, Calif., assignor to Air Factors, Inc., Covina, Calif., a corporation of California

Filed Feb. 1, 1962, Ser. No. 170,459
13 Claims. (Cl. 98—40)

This invention relates in general to an air diffuser adapted for use in ceiling installations to diffuse conditioned air into a room or office from an extended area of the ceiling. More particularly, the invention relates to an air diffusing assembly adapted for integration into a suspended ceiling system of the type wherein a false, lowered ceiling is provided by supporting ceiling tiles or acoustical boards, lighting fixtures and conditioned air ducts on hangers mounted from structural portions of the actual ceiling of the building.

Architects and builders have found that by suspending a false ceiling from the actual ceiling of a room, various electrical conduits, telephone lines, piping for plumbing and other tubes, pipes and conduits normally embedded in the walls or floors may be suspended in the attic space provided by the lowered ceiling. Therefore, while the unsightly conduits etc. are hidden from view, they are readily made available for repairs and replacements by merely removing portions of the false ceiling. Such ceilings are normally provided by suspending a plurality of ceiling tiles or acoustical boards upon a framework or grid of metal runners. The grid or framework is suspended from the actual ceiling of the room by hanger rods. Various lighting fixtures and air conditioning ducts have also been inserted into such suspended ceiling systems requiring a consolidation of building activities to install the various ceiling components.

It is contemplated that each of the crafts required to assemble the ceiling system, such as carpentry, electrical, plumbing and sheet metal working all may be readily supplied by a single contractor who is responsible to the architect or builder for the entire ceiling installation.

It is a principal object of my invention, therefore, to disclose and provide a fully integrated suspended ceiling installation wherein the lighting fixtures, conditioned air diffusers and ceiling boards all may be readily integrated with each other to provide an economical, flexible and pleasingly appearing suspended ceiling which presents a substantially smooth ceiling surface to the room area below.

It is another object of my invention to disclose and provide an air diffuser for diffusing conditioned air from a suspended ceiling into a room area below it wherein the air diffuser is integrated into the ceiling system and becomes a part of the grid or framework supporting the ceiling, tile or acoustical board.

It is another object of my invention to disclose and provide an air diffuser for use in an integrated suspended ceiling system wherein air flow from said ceiling into the room area below it may be selectively controlled to allow concentration of air flow into particular areas of the room or to diffuse the air throughout the room.

It is a further object of my invention to disclose and provide an air header construction particularly adapted for use in a suspended ceiling air diffuser having spaced vertical walls forming a main air channel for conditioned air supplied by said header wherein said header is comprised of a plurality of indiividual units which may be stacked readily for storage and shipment prior to assembly and which may be easily assembled to the diffuser at a job site by merely positioning the header units above the suspended diffuser walls and slip fitting portions of the header to the air diffuser.

It is a still further object to disclose and provide air straightening means within the main air channel of the air diffuser, as hereinbefore indicated, to promote virtually lateral air flow from said diffuser and wherein the provision of such means in said channel is automatically accomplished upon the assembly of the air header to the diffuser.

It is another object of my invention to disclose and provide an air diffuser adapted for integration into a suspended ceiling system wherein a diffusing element provided in the ceiling air diffusing duct may be readily removed or replaced manually without the need for tools or trained personnel.

It is a further object of my invention to disclose and provide an air diffuser particularly adapted for use in extended areas of a ceiling wherein air flow from the diffuser may be selectively directed laterally thereof generally along the ceiling surface, and where the diffuser presents a generally smooth appearing lower surface to the room area below.

Generally stated, my invention contemplates the provision of a plurality of air headers suspended above a false or lowered ceiling with each interconnected by flexible conduit with a source of conditioned air, either heated or cooled. Each header is operably associated with an air diffuser which is provided along and extending into the false ceiling. The diffuser comprises a pair of spaced opposed walls or shells, forming an air pressure or plenum chamber, having divergent lower surfaces terminating in the ceiling surface. It is contemplated by my invention that the diffuser act as part of the suspended ceiling framework replacing a main runner thereof. To that end, the diffuser walls or shells are suspended from the actual ceiling on hanger rods and are provided with outwardly extending flanges on their outer surfaces to receive and support ceiling tile, acoustical boards or even electrical lighting fixtures. The diffuser shells or walls may further support the associated air header. The diffuser may extend along the ceiling only a few feet or it may extend longitudinally for the entire length, or width of the ceiling.

Upper portions of the diffuser walls or shells are interconnected with an associated air header such that conditioned air forced through the header may flow, partially by gravity and partially due to flow pressure, down from the header into the plenum chamber between the spaced diffuser walls. The diffuser walls may also be considered to form a main diffuser air channel which extends between the header and false ceiling and along the ceiling.

According to another particularly novel aspect of my invention, the air header is provided by a plurality of longitudinally disposed metal plate elements which form conduit or tube units. The unit may comprise two opposed concave or trough-like halves placed together or, preferably, a single flat plate which may be bent into rounded, tubular shape on the job site. In either case, the side walls of the tube terminate along a longitudinal portion in spaced, depending flanges forming an air discharge opening with spaced side walls or flanges. The spaced, depending flanges are adapted to slip fit in between the upper portions of the diffuser walls or shells to interconnect the header and diffuser. Air in the header is thereby channeled by the flanges into the main diffuser air channel between the shells. A change in direction of air flow from that along the air header to a downward direction through the main diffuser air channel may be greatly facilitated by the provision of novel air straightening means, which, according to my invention, comprise the provision of an air straightening core positioned between the aforementioned air header depending flanges. The core is preferably formed integrally with one of the

flanges and extends therefrom to the opposed flange. The air header with depending flanges and air straightening core may therefore be provided in a single unit adapted to be hung in a suspended ceiling installation as a unit by an air conditioning contractor. The air conditioning contractor need merely slip the air header flanges between the diffuser walls or shells, the shells having been installed by the carpenter, and is responsible for the provision of conditioned air to the main diffuser air channel. After the ceiling tile is suspended on the main runners of the ceiling, formed by the diffusers and cross runners, the same air conditioning contractor may install a diffuser strip at the lower ends of the diffuser walls, to controllably diffuse the air supplied through the main diffuser air channel. A single contractor is then responsible for the supply of conditioned air from the air header to the room area below, relying only on the proper positioning of the diffuser walls by another contracting party, the carpenter or ceiling applicator.

A diffuser strip, according to my invention, is provided between the diffuser walls or shells and is located particularly between the divergent lower surfaces which terminate in the ceiling. The diffuser strip is provided with downwardly sloping or inclined top surfaces which oppose the corresponding divergent low surfaces of the diffuser walls and form a pair of divergent air passages therebetween. Thus, air forced down between the diffuser walls is diverted into the divergent air passages by the diffuser strip. The diffuser strip may be provided of generally triangular cross-section and have a smooth flat bottom surface exposed to the room area below the ceiling. In a preferred embodiment, the diffuser strip has a Δ (delta) shaped cross-section.

As further particularly contemplated by my invention, the diffuser strip is provided with vane means on its upper portion which extend between the diffuser walls and into the main diffuser air channel. The vane means break up and selectively direct the air flow from the main channel and cause it to be diffused through the two air passages. As explained later in the detailed explanation of the invention, the vane means may diffuse the air in a predetermined manner or be selectably adjustable on the diffuser strip.

Further objects and various additional advantages of my invention will become readily apparent and a better understanding of the invention will be attained by a consideration of the following detailed description of a preferred, exemplary embodiment, according to my invention, and two exemplary modifications thereof. Reference will be made to the appended sheets of drawings in which:

FIG. 1 is an elevational section view of a preferred, exemplary embodiment of an air diffuser particularly adapted for use in integrated suspended ceiling installations, according to my invention;

FIG. 2 is a detail view of a portion of the air diffuser of FIG. 1;

FIG. 3 is a perspective view of a modified, exemplary embodiment of an air directing core means;

FIG. 4 is a detail view of the air straightening means of the embodiment of FIG. 1;

FIG. 5 is a detailed perspective view of the diffuser strip according to the invention;

FIG. 6 is a modified, exemplary embodiment of a diffuser strip according to my invention;

FIG. 7 is a perspective view of a modified form of air diffuser according to my invention;

FIG. 8 is a cross-section view of the embodiment of FIG. 7;

FIG. 9 is an elevational section view of an alternative embodiment of an air diffuser, according to the invention;

FIG. 10 is a detail view of the air header of the embodiment of FIG. 9 prior to being bent to be assembled to the diffuser walls; and

FIG. 11 is a detail view of the air header of FIG. 10 bent generally cylindrically to be inserted between the diffuser walls of FIG. 9.

Referring now particularly to the FIGS. 1 through 5, an exemplary embodiment of an air diffuser and integrated suspended ceiling installation, according to my invention, will be described in detail. It should be noted here that the embodiment of FIG. 1 is a preferred embodiment, but that other modifications and alterations as shown in the remaining figures, as well as others not shown, are contemplated within the scope of my invention.

The main runner, indicated generally at **20**, is formed of two spaced, opposed walls or diffuser shells **21** and **21'** which, with closed end walls not shown, form a pressure or plenum chamber between the air header indicated generally at **70** and the diffuser strip means indicated generally at **40**. Diffuser shells or walls **21** and **21'** may be made of extruded aluminum to easily provide the various flanges and channels integral with the walls or shells as contemplated within my invention.

Upper portions **21** and **21'** of opposed, spaced shells or walls, indicated generally at **20**, are preferably generally planar and parallel and may be provided with outwardly directed flanges **22** and **22'** to cooperate with air header connector means. Midportions **23** and **23'** of the diffuser walls are each provided with recessed channels indicated generally at **24** and **24'**, respectively. Recessed channels **24** and **24'** open inwardly of the diffuser walls, thus opposing each other, and have their openings partially closed by inbent flanges **18**, **19** and **18'**, **19'**. The inbent flanges preferably lie in the plane of the diffuser walls. The recessed channels, with the inbent flanges, are provided to cooperate with spacer and supporting means, indicated generally at **25**. Spacer support means, indicated generally at **25**, comprise a pair of U-shaped channels **26** and **27** which, when positioned back to back but in spaced relation, as shown in FIG. 1 and 9, lock into the recessed channels **24** and **24'** due to the locking engagement of the U-shaped channel flanges with the recessed channels and their inbent flanges.

Spacers **26** and **27** engage inwardly directed channels **24** and **24'** to accurately space the walls **21** and **21'**. This spacing may be varied by the size of the spacers **26** and **27** employed. Hanger rod **11** may extend downwardly through the top ported spacer **27** and abut a top surface of the lower spacer **26** with a threaded lower end. Upper spacer **26** is tapped and threaded to receive the lower end of hanger rod **11** so that turning of rod **11** will bind the spacers in the channels **25** and **25'** of the diffuser walls or shells. The ceiling tile **12**, may be supported on generally horizontal bottom flanges **29** and **29'**, as shown in FIG. 1, which present virtually flat lower surfaces to the room area below the diffuser.

Lower portions **30** and **30'** of the diffuser shell or walls, indicated generally at **20**, are downwardly divergent to provide outwardly and downwardly inclined lower surfaces **31** and **31'** depending from the opposed inner surfaces of the diffuser walls.

Diffuser strip means are provided below the plenum or pressure chamber formed between the diffuser shells or walls indicated generally at **20**, to cooperate with the downwardly divergent lower walls **30** and **30'** of the main runner in diffusing conditioned air from the air header into the occupancy space below. Such means may comprise a diffuser strip **41**, positioned between the planes of walls **21** and **21'** and particularly between the divergent lower surfaces **30** and **30'**.

Diffuser strip **41** may be made of extruded aluminum and is provided with a pair of downwardly and outwardly inclined top surfaces **42** and **42'** which are spaced from and opposed to the diffuser shell divergent lower surfaces **31** and **31'**, respectively. These surfaces **31**, **31'** and **42**, **41'** form two divergent air passages B and C leading from the main air channel A, between walls or shells and through the ceiling **10**. The sum of the cross-sectional

area of the two air passages B and C is preferably equal to that of the main air channel A. The surfaces 42 and 42' are converging in that they tend to come together at their upper ends but do not necessarily, as shown in FIG. 2.

The incline of the surfaces 31, 31' and 42, 42' may be of about 30° to the plan of the ceiling to direct air discharged therefrom generally laterally along the ceiling, providing good air diffusion. In rooms with rather high ceilings, a narrower diffuser strip 41 may be provided to direct the lateral flow of air in a more downward direction.

Diffuser strip 41 is preferably of generally triangular or "delta" (Δ) cross-section, as shown in FIGS. 1 and 5, having downwardly and outwardly inclined top surfaces 42 and 42' and a generally flat bottom surface 43 which lies flush with the bottom flanges 29 and 29', respectively. The diffuser strip is removably hung between the walls indicated generally at 20, by means of spring clips or diffuser hangers 44 which clip onto the depressions 45 and 45' in the diffuser walls at the upper portion thereof and are bent inwardly at lower portions 47, 47' thereof to fit into slots 46, 46' formed in the diffuser strip 41. An exemplary clip 44 is shown in detail in FIG. 2.

Vane means are associated with the diffuser strip to direct conditioned air forced from main channel A, formed between the diffuser walls, selectively into air passages B and C formed between surfaces 31 and 42 and 31' and 42', respectively. The converging top surfaces 42 and 42' of diffuser strip 41 may be interrupted at their upper ends by a top slot 48 formed within diffuser strip 41 and there abut the vane means positioned within such slot. Vane means 50 are comprised, in the exemplary embodiment of FIGS. 1 and 5 of a plurality of individual vanes 51, each pivotally mounted at a lower end thereof in the top slot 48 in diffuser strip 41. Each vane 51 may be manually adjusted individually to direct substantially all the air from the main air channel A (passing that particular vane 51) either into one of the passages B or C, or in a selectively variable amount between the two passages B and C.

The air diffusion from a particular main runner, or air diffuser assembly incorporated into such runner, may therefore be directed laterally of the runner either entirely in one direction or be distributed between the two lateral directions as desired. The vane means 50 of successive diffusers in a ceiling installation may thus be set to concentrate air flow toward a particular location, between adjacent diffusers or may be set for a generally even diffusion of conditioned air throughout the occupancy space below the diffusers. Such adjustment of the vanes may be accomplished manually without the need for tools or complicated adjustments.

Air header means 70 are provided above the main runner, indicated generally at 20, and may be provided with air discharge means in the lower walls thereof, in the form of elongated slot 75 in the preferred embodiment of FIG. 1, adapted to discharge conditioned air into the plenum chamber below, formed between the diffuser walls or shells indicated generally at 20. The cross-sectional area of the air discharge aperture formed by slot 75 must be less than that of the air header to allow proper distribution of conditioned air all along the diffuser. The header is connected at one end to a source of conditioned air, is closed at the other and may be made of metal only but preferably is made with a lining of fiber blass bat. The use of fiber glass bat allows the provision of a light weight header having excellent thermal insulating qualities.

Air header means 70 may comprise a plurality of longitudinally extending conduit or tube units 72 which are joined together to provide a continuous air duct. In some installations where only a short extent of diffuser is employed, a single unit may suffice for the header, it being supplied by a flexible conduit with conditioned air.

Such means or conduit units are provided by a metal plate element or elements to form a tube. In the embodiment of FIG. 1, the air header is comprised of two opposed concave, trough-like conduit halves 73 and 73' placed together to form a hexagonal tube. The hexagonal shape is desirable because the conduit halves 73 and 73' may be readily stacked, one on the other, during storage and shipment prior to assembly to the diffuser. Further, the hexagonal shape allows the reduction of air header diameter, by mating a successive conduit unit of smaller dimensions with a pre-existing one, wherein two adjoining outside walls of the successive sections or units may be flush to each other and virtually continuous. The side walls or conduit halves 73 and 73' of the air header units 72 each terminate in a downwardly depending, longitudinally extending flange 74 and 74', respectively. Flanges 74 and 74' are spaced from each other and adapted to slip fit between the spaced, opposed upper portions of side walls or shells 21 and 21'. The flanges 74 and 74' may have inwardly converged pliable lip portions 76 and 76' which may be manipulated to alter the effective width of the opening between the flanges 74 and 74' and thus adjust the effective width of the main air diffuser channel A. Top flanges 77 and 77' on sheath 72 mate along the top of the air header, may be held together by any suitable fastening means as is well known in the art, such as the metal clip 78 shown in FIG. 1 and are cut out occasionally to allow the hanger rod 11 to pass through. Insulation 71 may be provided on an inner surface of the air header and is merely compressed against itself to seal the air header at the top portion and may be held at the lower ends by channels 76 and 76' secured within the conduit halves 73 and 73', respectively.

The connector means or flanges 74 and 74' may serve both as part of a main air diffuser channel, between the header 70 and diffuser strip means, indicated generally at 40, and also to position and support the air header 70 above the main runner, indicated generally at 20, as shown in the exemplary embodiment of FIG. 1. The flanges 74 and 74' also serve as a form of air boot or neck, interconnecting the main runner and air header.

Air straightening means are provided to promote the lateral flow of conditioned air from the diffuser. Initially, air in the header, indicated generally at 70, flows generally horizontally therethrough, but, due to the force of gravity and flow pressure, it tends to fall downwardly into the main air channel A. However, the horizontally moving air tends to retain its forward momentum. Thus, such air flow would normally come out of channels B and C, not laterally thereof, but at some angle to the longitudinal extent of the diffuser, when viewed in a horizontal plane taken just below said diffuser. To provide true lateral air flow, the air should flow straight downwardly through the main air channel A and be directed laterally by the air channels B and C. According to the invention, an air straightening core, indicated at 80, FIGS. 1 and 4, may be provided, preferably between the metal sheath flanges 74 and 74'. The preferred embodiment of FIGS. 1 and 4 is integrally formed with the metal sheath by forming or knocking out vanes 81 in one of the sheath flanges 74. The vanes 81 thus space the flanges 74 and 74', when fitted between the upper portions 21 and 21' of the diffuser shells or walls, indicated generally at 20, and direct air from the air header downwardly between the walls. It is preferred that the height of the vanes 81, in FIGS. 1 and 4, be equal to or greater than the distance between vanes to ensure complete straightening of the air flow into a vertically downward direction of flow. An alternative form of air straightening core is indicated generally at 80' in FIG. 3. The core 80' may be formed of a single strip of metal that is bent to provide the vertical vane portion 81' as shown. It may be welded to one

of the metal sheath flanges 74 and, as in the core 80 of FIGS. 1 and 4, serve both as an air straightening means and a spacer for flanges 74 and 74'.

It has been found that in installations employing a long diffuser extending perhaps for the entire length or width of a ceiling, that very high pressures need be employed in the air header to provide adequate air flow at the far end of the diffuser. High air pressure causes not only high levels of noise in the distribution of air from the diffuser but excessively strong air currents below the diffuser at the end of the diffuser near the conditioned air supply. To allow use of such high pressures in the diffuser, according to the invention, without the aforementioned undesirable side effects, air pressure reducing means may be provided within the air header itself. As shown in FIG. 1, a smooth, contoured constricting passageway, indicated generally at 90, may be formed within the air header, by providing spaced opposed walls 91 and 91'. Walls 91 and 91' have lower, generally horizontal closure plate extensions 92 and 92', respectively, to close off the main air channel A, except from air passing through the constricted passageway, indicated generally at 90. High pressure air within the air header, indicated generally at 70, may therefore be reduced in pressure in passing through the constricted passageway, indicated generally at 90, straightened by the straightening core, indicated at 60, passed downwardly between the diffuser side walls or shells, indicated generally at 20, selectively directed by the vane means, indicated generally at 50, and diffused laterally of the diffuser through the air passages B and C formed between the upper diffuser strip surfaces 42, 42' and the divergent, downwardly inclined lower surfaces 31 and 31' of the diffuser walls. In actual practice, it has been demonstrated that conditioned air may be directed laterally, at right angles to the length of the diffuser, along the ceiling or downwardly therefrom by the ceiling air diffuser, according to the invention.

Referring now to FIGS. 6, 7 and 8, a simplified, alternative embodiment of a diffuser and diffuser assembly, according to my invention is shown. Here the air header 170 is provided with air discharge means comprising a plurality of generally circular apertures 175 in a side wall thereof, adapted to discharge conditioned air generally horizontally thereof into an air boot or neck 174. This arrangement of header 170 and air boot 174 facilitates the integration of the diffuser assembly in the suspended ceiling system when a lighting fixture 200 or the like is positioned alongside the diffuser walls, indicated generally at 120, as shown in FIGS. 7 and 8. It further facilitates the suspension of the diffuser shells or walls on the hanger rods 111, connected to the cross runners 113, the rods 111 not passing through the air header 170 as in the case of hanger rods 11 and header 70 in FIGS. 1 and 2.

Diffuser shells or walls, indicated generally at 120, are spaced by a spacer 219 and are provided with divergent lower surfaces 131 and 131' and with outwardly directed flanges 129 and 129'. The flanges 129 and 129' receive and support the ceiling tile 12, plates or boards. Flange 129' is shown adapted to form an integral portion of an electric light fixture 200 and support a translucent plate 201 of the fixture. The cross runner 113 hung on hanger rods 111, may be fastened to lower portions 130 or 130' of the diffuser shells, indicated generally at 20, at their ends as shown in FIG. 7.

The diffuser strip, indicated generally at 140 in FIGS. 7 and 8, is of triangular cross-section and is disposed between the walls or diffuser shells, indicated generally at 120, by the interaction of the vane means 150 and the upper wall portions 121 and 121'. The upper wall portions 121 and 121' are provided with a longitudinally extending recess 165 and 165', respectively, to cooperate with the vane means 150.

Vane means 150 in the modified diffuser of FIGS. 7 and 8, comprises a plurality of blades 151 inclined alternately toward the upper wall portions 121 and 121' of the main runner. Each blade 151 may be formed integrally with a top surface 142 or 142' of strip 140 and extends upwardly from such top surfaces where it is bent to incline therefrom at an angle to the strip. The blades are bent alternately as shown in FIG. 7 and are provided with abutment lip portions 152 and 152', respectively, to engage the recesses. The opening between the upper wall portions 121 and 121' is slightly narrower than the distance between the free ends of the adjacent blades 151, measured across the strip 140, causing a warping or springing of the blades when the diffuser strip is positioned between the diffuser shells or walls, indicated generally at 120. The free ends of the blades 151 may therefore be snapped into the recesses 165 and 165' to resiliently hold the diffuser strip in place. The provision of such vane means allows the diffuser strip and vane means to be readily removed or replaced by merely manually inserting or removing it from between the diffuser shells or walls.

A further alternative form of diffuser strip 240 and associated vane means 250 is shown in FIG. 6 where the individual blades 251 are welded to the bottom of the strip 240, within the strip, and are bent alternately toward the sides of the strip where they protrude from the convergent top surfaces 242 and 242'.

Vane means 150 or 250 provide a diffusion of conditioned air from the main air channel A' into the air passages B' and C' in a predetermined manner, the alternative inclination of the vanes being preferred. To change the air diffusion pattern, a diffuser strip with vanes arranged in other than alternative settings could be provided as desired to concentrate air flow in a particular direction.

A still further embodiment of the ceiling air diffuser, according to my invention, is shown in FIGS. 9, 10 and 11. The diffuser walls or shells, indicated generally at 220, have upper portions 221 and 221', adapted to receive the air header, indicated generally at 270, inwardly opening recessed channels 24 and 24', and lower portions 230 and 230' having downwardly divergent lower surfaces 231 and 231'. In this embodiment, the lower portions 230 and 230' are further provided with upwardly facing recessed channels, indicated generally at 232 and 232', to receive metal connector strips to facilitate joining successive sections of diffuser walls extending longudinally along the ceiling. Hanger 44 supports a broader based, generally triangular extruded diffuser strip, indicated generally at 240, by being snapped into the recesses 233 and 233' formed where the midportions 223, 223' join the lower portions 230, 230', respectively.

A modified form of air header, indicated generally at 270, is shown in FIG. 10 in its non-assembled form. A metal sheet or plate element 273, having insulation 271 attached thereto, may have flange members 274 and 274' bent inwardly toward the side opposite the insulation 271. Flanges 274 and 274' are bent inwardly, as shown in FIG. 10, five or ten degrees beyond the perpendicular to the sheet 273. Such overbending facilitates the sheet 273, forming a circular cross-section when bent into the tubular form. As shown in FIG. 11, just prior to insertion of flanges 274 and 274' in between the upper portions 221 and 221' of the diffuser walls. The flanges 274 and 274' are at acute angles to the adjacent sheet portions. To assemble the air header to the diffuser walls, it need merely be bent from its flat shape of FIG. 10 to its looped shape of FIG. 11, by the air conditioning contractor, and then be slip fitted in between the diffuser walls. The flanges 274 and 274' may have air straightening means, preferably the integrally formed vanes 281, which position the flanges and straighten air flow through the main air channel between the diffuser walls. The air straightening means may be provided integrally of one of the flanges, as in the embodiment of FIG. 4, or as an added element, as in the embodiment of FIG. 3, it being of principal importance to provide the air straightening means in associa-

tion with the air header flanges so that it is readily assembled along with the header to the diffuser walls in a single operation at the job site. When the vanes **281** are provided by off-setting an integral portion of the flange **274'**, and additional flange element **276'** is provided to prevent air flow through the openings left by the vanes **281** in that flange, such element **276'** may be made by initially providing flange **274'** with a greater width than flange **274** and folding back the element **276'** upon flange **247'** after forming the vanes **281**. The provision of this additional element **276'** on flange **274'** may not only serve to close the aforementioned openings but, if not tightly crimped against flange **274'**, may serve to resiliently aid a snug fit of flanges **274** and **274'** in between the spaced diffuser walls.

As is apparent from the foregoing detailed descriptions of a preferred, exemplary embodiment and modifications thereof, the air diffuser, according to my invention, is particularly adapted for use in a suspended ceiling installation. The diffuser shells or walls may be substituted for the main runner of the grid or framework of the suspended ceiling allowing complete integration of my diffuser and assembly into the ceiling components including ceiling tile or boards, lighting fixtures and other ducts, conduits or wires employed. The same diffuser shells may be employed in main runners supporting only tile and lighting fixtures without the diffuser assembly or may, with an adapter, serve to position and laterally support the upper portion of a wall or room partition. The distance between runners, formed by the diffuser shells, as well as the distance between the diffuser shells themselves may be easily varied providing flexibility and ready adaptability of the ceiling construction to differeing building or architectural requirements.

The diffuser strip and vane means elements may be readily removed, replaced or adjusted manually and without the need for expensive tooling or time consuming operations. The diffuser may extend the entire length of a ceiling or only part. If a portion of the diffuser is not needed, the diffuser may be sealed by replacing the diffuser strip with an insert. An interrupted diffuser system along the ceiling may be provided by the use of such inserts and a longer diffuser, operating at the same air pressure, may thereby be effected. High pressures may be used particularly where the pressure reducing means, positioned within the air header, are employed. By employing my invention, the architect or builder is allowed considerable flexibility and freedom of design while constructing an eye pleasing economical suspended ceiling installation having complete integration of lighting, air conditioning and ceiling.

While I have described only a preferred embodiment and two modifications thereof, it should be remembered that other modifications, alterations and adaptations of diffusers, diffuser assemblies and integrated suspended ceiling installation may be made within the scope of my invention which is defined and limited only by the following claims.

I claim:

1. A longitudinally extending, narrow air diffuser for use in suspended ceiling installations, comprising:
- a ceiling runner including a pair of longitudinally extending, substantially vertical, spaced walls and inclined lower wall surfaces, said lower wall surfaces being divergent downwardly;
- a diffuser strip having a lower generally horizontal face and convergingly inclined upper surfaces; and
- resilient support means mounted on said diffuser strip for resiliently engaging inner portions of said vertical spaced walls to removably support said diffuser strip between said diverging lower wall surfaces, said strip and lower wall surfaces forming a pair of oppositely inclined longitudinally extending air channels therebetween in communication with the space between said vertical spaced walls of said ceiling runner.

2. A longitudinally extending, narrow air diffuser for use in suspended ceiling installations, comprising:
- a ceiling runner provided with a pair of longitudinally extending, substantially vertical, spaced walls, and inclined lower wall surfaces, said lower wall surfaces being divergent downwardly;
- a flange extending laterally from the lower portion of each of said walls, said flanges lying in a horizontal plane and adapted to cooperate with ceiling fixtures;
- a diffuser strip positioned between the diverging lower wall surfaces, said strip having a lower horizontal face substantially in the plane of a ceiling and convergingly inclined upper surfaces spaced from said diverging lower wall surfaces to form therewith a pair of oppositely inclined, relatively narrow, longitudinally extending air channels in communication with the space between the substantially vertical walls of said runner;
- air directing means mounted on an upper portion of said strip for distributing air from the space between said substantially vertical walls into said air channels; and
- recess means on each of said substantially vertical spaced walls; and
- strip supporting means for removably mounting said diffuser strip between said diverging lower wall surfaces, said supporting means including resilient portions to engage said recess means on said vertical spaced walls.

3. An air diffuser adapted to be used with suspended ceiling installations comprising:
- a pair of spaced walls having divergent lower surfaces;
- a diffuser strip having downwardly inclined top surfaces;
- resilient means mounted on said diffuser strip for removably assembling said diffuser strip between said walls with said diffuser strip top surfaces opposing said diverging lower surfaces of said spaced walls to form divergent air passages therebetween; and
- air directing vane means mounted on an upper portion of said strip having side surfaces thereof disposed in the path of air forced toward said strip from between said walls for diverting said air into said divergent air passages in a predetermined manner.

4. An air diffuser adapted to be used with suspended ceiling installations of the character described, comprising:
- a pair of longitudinally extending spaced side walls having divergent lower surfaces, said side walls including longitudinally extending opposed recesses;
- a diffuser strip having downwardly inclined top surfaces;
- means for removably mounting said diffuser strip between said walls with said diffuser strip top surfaces opposing said diverging lower surfaces of said spaced side walls to form divergent air passages therebetween; and
- air directing vane means mounted on an upper portion of said diffuser strip to divert air forced toward said strip from between said walls into each of said divergent air passages in a predetermined manner, said vane means including a plurality of upwardly inclined vanes mounted along the diffuser strip, said vanes being alternately inclined toward said walls and presenting free end portions resiliently engaging said opposed recesses.

5. An air diffuser as in claim 4 wherein said air directing vane means includes a plurality of air vanes and means for pivotally mounting a lower end of each of said vanes on an upper portion of said strip.

6. A longitudinally extending, narrow air diffuser for use in suspended ceiling installations, comprising:
- a ceiling runner provided with a pair of longitudinally

extending, substantially vertical, spaced walls, said walls having opposed inwardly opening recessed channels in midportions thereof, inbent flanges associated with said recessed channels narrowing the recessed channel openings and lying in the plane of said walls and inclined lower wall surfaces, said lower wall surfaces being divergent downwardly;

spacer support means including a pair of generally U-shaped, horizontally disposed, channels positioned back to back but in vertically spaced relation, an upper channel having upwardly directed side flanges and a ported web, said channels being disposed between said walls with said U-shaped channel flanges lying in said recessed channels under said inbent flanges, hanger means extending downwardly through said ported web of said upper channel and abutting said lower channel at a lower end thereof and constraining means on said lower end of said hanger means for upwardly constraining said upper U-shaped channel relative to said hanger means holding said U-shaped channels in spaced relation locked within said recessed channels to support and space said walls;

a diffuser strip having a lower horizontal face and convergingly inclined upper surfaces; and

means for mounting the diffuser strip between the ceiling runner inclined lower wall surfaces with said diffuser strip inclined upper surfaces spaced from said ceiling runner lower wall surfaces to form therewith a pair of oppositely inclined longitudinally extending air channels in communication with the space between the substantially vertical walls of said ceiling runner.

7. In an air diffusing assembly particularly adapted for use in suspended ceiling installations including a pair of spaced, generally vertical diffuser side walls having downwardly divergent lower surfaces and air diffusing means disposed between said side walls and adjacent said lower portions forming divergent air channels with said lower portions, the provision of air header means connected with said diffuser side walls to supply conditioned air to said divergent air channels, said air header means comprising:

a pair of opposed, inwardly opening concave members forming an air plenum, said concave members having lower walls terminating in spaced depending flanges forming an air discharge opening from said plenum, said depending flanges being adapted to slip fit between said spaced diffuser walls;

insulation material on inner surfaces of said concave members; and

air straightening core means associated with at least one of said depending flanges and extending therebetween to space said depending flanges between said diffuser walls and to direct air from within said plenum downwardly between said diffuser walls.

8. A ceiling air diffuser assembly characterized by the ease of assembly of air supply means and air diffuser means to a ceiling runner incorporated into a suspended ceiling installation comprising:

a ceiling runner including a pair of walls with inclined lower surfaces;

means for suspending said walls in spaced opposed relation as part of a suspended ceiling installation, said inclined lower surfaces being downwardly divergent;

air supply means for supplying air to said runner including an air conduit with spaced depending flanges forming an elongated air discharge opening in said conduit, said flanges being received between said walls when said supply means is assembled to said runner to supply aid from said conduit to the space between said walls and to support said air supply means on said runner; and

air diffuser means for diffusing air from said space out of said assembly including an air diffuser strip and means for removably assembling said diffuser strip to said runner between said divergent lower walls to form a pair of divergent said channels therebetween, said last named means including resilient members mounted on said strip for resiliently engaging and removably holding to said runner.

9. The ceiling air diffuser assembly of claim 8 in which combination spacer and air straightening means comprising a plurality of vertical vanes are mounted to at least one of said air conduit flanges to space said flanges between said walls and to straighten air flow from said conduit straight down into said runner between said runner walls toward said diffuser means.

10. The ceiling air diffuser assembly of claim 8 in which said air diffuser means includes a plurality of air directing vanes and vane mounting means for mounting each of said vanes on an upper portion of said strip to selectably direct air from said air supply means into said divergent air channels.

11. The ceiling air diffuser assembly of claim 10 in which said vane mounting means includes means for pivotally mounting each said vane on said diffuser strip to allow selectable pivotal adjustment of each vane on said strip to selectably direct air from said air supply means into said divergent air channels.

12. In an air diffuser assembly including a frame portion having spaced walls with divergently inclined lower surfaces and means for supplying conditioned air to the space between said walls, the provision of a readily removable air diffuser means between said lower surfaces to provide a pair of divergent air discharge channels therebetween, said air diffuser means including an elongated air diffuser strip having upwardly inclined convergent upper surfaces and resilient holding means on said strip for resiliently engaging said walls releasably holding said strip between said frame lower surfaces.

13. In an air diffuser assembly including a frame portion having spaced walls with divergently inclined lower surfaces and air diffuser means positioned between said lower surfaces to provide a pair of divergent air discharge channels communicating with the space between said walls, the provision of an air supply means capable of ready assembly to said frame to supply conditioned air to the space between said walls, said air supply means comprising an air conduit having longitudinally extending outwardly bent flanges along a side thereof forming an elongated air discharge opening in said conduit therebetween, said flanges being received between said frame walls when said air supply means is assembled to said frame, and a plurality of air straightening vanes mounted on at least one of said flanges to automatically space said flanges within said walls on their assembly thereto hold said air supply means in position over said frame.

References Cited by the Examiner

UNITED STATES PATENTS

2,937,589	5/1960	Rachlin	98—40
2,947,238	8/1960	O'Day	98—40
2,959,116	11/1960	O'Day	98—40
3,004,142	10/1961	Archer	98—40
3,031,944	5/1962	Davidson	98—40
3,067,669	12/1962	O'Day	98—40
3,093,058	6/1963	La Vigne	98—40
3,132,579	5/1964	La Vigne	98—40

WILLIAM F. O'DEA, *Acting Primary Examiner.*

CHARLES E. O'CONNELL, ROBERT A. O'LEARY, *Examiners.*