C. W. WEST.

FOUNTAIN BRUSH.

APPLICATION FILED AUG. 12, 1912.

1,068,719. Patented July 29, 1913.

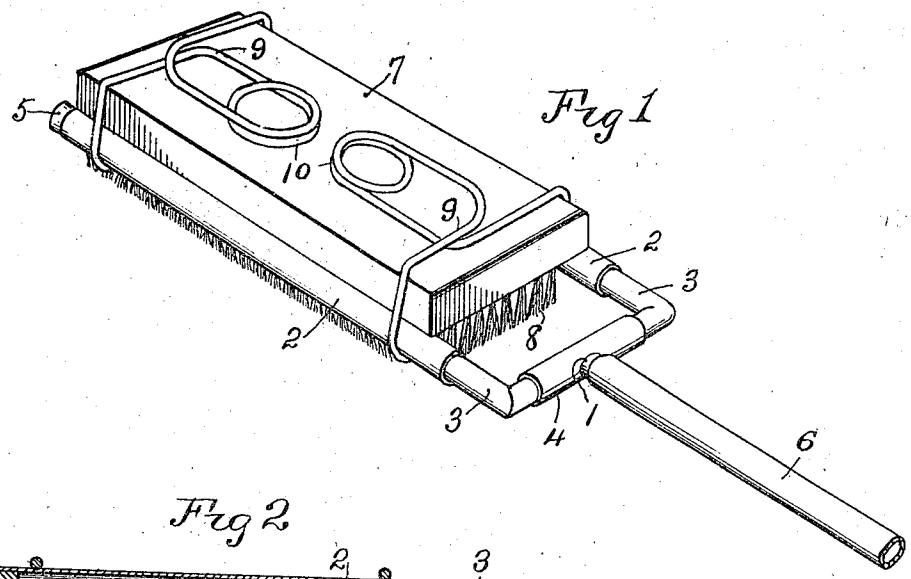

Fig 1

Fig 2

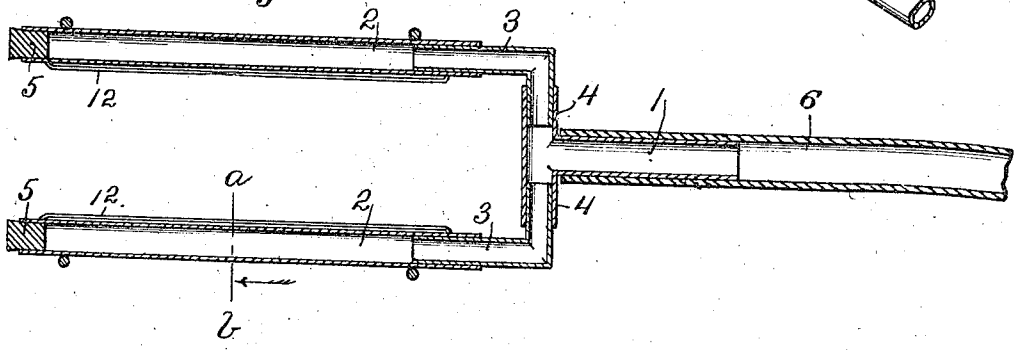

Fig 3

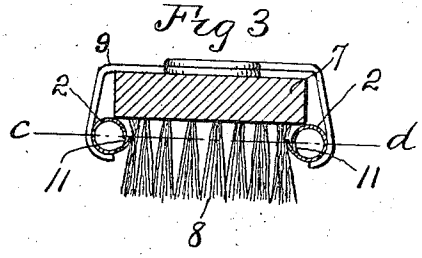

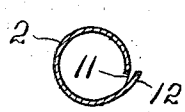

Fig 4

WITNESSES:

R. E. Hamilton

E. B. House.

INVENTOR.

Charles W. West

BY

Warren D. House

His ATTORNEY.

UNITED STATES PATENT OFFICE.

CHARLES W. WEST, OF KANSAS CITY, MISSOURI, ASSIGNOR OF ONE-HALF TO S. J. HAMSHAW, OF KANSAS CITY, MISSOURI.

FOUNTAIN-BRUSH.

1,068,719. Specification of Letters Patent. Patented July 29, 1913.

Application filed August 12, 1912. Serial No. 714,532.

To all whom it may concern:

Be it known that I, CHARLES W. WEST, a citizen of the United States, residing at Kansas City, in the county of Jackson and State of Missouri, have invented a certain new and useful Improvement in Fountain-Brushes, of which the following is a specification.

My invention relates to improvements in fountain brushes.

The object of my invention is to provide an apparatus by which the bristles of a brush may be kept supplied with clean fresh water.

Another object of my invention is to provide an apparatus by which the bottom of the body of the brush and the upper ends of the bristles of the brush may be kept clean.

My invention provides further a fountain brush comprising two tubular arms and a body pivoted to the arms so as to be capable of being swung vertically to different positions so as to be used conveniently as a handle for operating the device.

Other novel features are hereinafter fully described and claimed.

In the accompanying drawings which illustrate the preferred form of my invention, Figure 1 is a perspective view of my improvements applied to an ordinary brush, such as a scrub brush. Fig. 2 is an enlarged horizontal sectional view of the tubular conductor on the line *c*—*d* of Fig. 3. Fig. 3 is a cross section of the device shown in Fig. 1. Fig. 4 is a cross section on the line *a*—*b* of Fig. 2.

Similar reference characters designate similar parts in the different views.

The fountain brush comprises a conductor having a tubular body 1, communicating with two tubular arms, which are preferably longitudinally extensible and which are adjustable toward and from each other. In the preferred form, which is illustrated, each arm comprises a longitudinal tube 2, in which is longitudinally slidably fitted one end of a right angled, tubular member 3, the other arm of which is pivotally and slidably mounted in a lateral arm 4, two of which are provided at the adjacent end of the body 1. In the other ends of the members 2, are respectively mounted stoppers 5, by which these ends of the said members are closed. Water or other liquid is supplied to the body 1, by means of a flexible hose 6, which may be connected to any suitable water supply, such as a faucet, not shown.

As shown in Figs. 1 and 3, the members 2, which are parallel with each other, are adapted to be mounted at opposite sides of a brush, having the usual body 7 and bristles, or equivalent devices 8, secured to the underside thereof.

In attaching the members 2, to the brush, they are preferably placed against the bristles 8 and against the underside of the body 7, in which positions they may be releasably secured by any suitable means, as for example, by spring clamping wires 9, which extend over the top of the body 7 and have inwardly curved lower ends which embrace the members 2 and yieldingly hold them in the operative positions.

The spring members 9 are preferably provided each with central coils 10, which permit the spring members to be expanded to a considerable extent, when it is desired to affix the device to a wide brush. The tension of the springs 9 is such that the members 2 are forced against the bristles 8 and against the underside of the body 7.

Each member 2 is provided with a discharge opening, consisting preferably in the longitudinal slot 11, disposed at the inner side of the member 2, said member having at the lower side of said slot an outwardly and upwardly extending longitudinal lip 12, which serves to deflect the water or other liquid discharged through the slot 11 obliquely upwardly and inwardly against the underside of the body 7, which in turn also acts as a deflector for diffusing the liquid throughout the bristles 8. As the liquid is discharged upwardly against the bottom of the body 7, said bottom and the upper ends of the bristles 8 are kept clean from the accumulation of dirt.

By making the arms of the device longitudinally extensible, it is adapted to be applied to brushes of different lengths. By pivoting the body member 1 to the members 3, the body 1 and hose 6 may readily be swung vertically to any desired angle so as to serve as a handle by which the device may be operated when the brush is used for scrubbing or similar purposes.

In operating my device, the parts having

been assembled as hereinbefore described, the hose 6 is attached to a faucet or other water supply, upon which the water will be discharged through the arms and slots 11 thereof against the underside of the body 7 of the brush. The water will then pass downwardly through the bristles 8. The brush may be now used in the ordinary manner.

With my improved apparatus, the water supplied to the brush is always clean and the brush will always remain in a clean and sanitary condition.

I do not limit my invention to the structure illustrated and described, as many modifications, within the scope of the appended claims, may be made without departing from the spirit of my invention.

Having thus described my invention, what I claim and desire to secure by Letters Patent, is:—

1. In a fountain brush, a brush having a body, a conductor having two tubular arms disposed at opposite sides of the brush and adjustable toward and from each other, and having each a discharge opening, and yielding means for forcing the arms toward each other and for attaching them to the body.

2. In a fountain brush, a brush body, a conductor having a body and two tubular arms, the arms being secured to the brush body at opposite sides thereof, each arm having a discharge opening, the conductor body being adjustable on the arms to various positions.

3. A fountain brush comprising a conductor having two tubular arms adjustable toward and from each other and having each a discharge opening, and means for attaching the arms to a brush body.

4. A fountain brush comprising a conductor having two tubular parallel extensible arms adjustable toward and from each other and having each a discharge opening, and means for attaching the arms to a brush.

5. A fountain brush comprising a conductor having two parallel tubular extensible arms adjustable toward and from each other and having each a discharge opening, and yielding means for forcing the arms toward each other and for attaching them to a brush.

6. A fountain brush comprising a conductor having a body and two tubular parallel arms each having a discharge opening, the arms being adjustable toward and from each other and the body being pivoted to the arms, and means for attaching the arms to a brush.

7. A fountain brush comprising a conductor having a body and two tubular extensible parallel arms each having a discharge opening, the arms being adjustable toward and from each other and the body being pivoted to the arms, and means for attaching the arms to a brush.

In testimony whereof I have signed my name to this specification in presence of two subscribing witnesses.

CHARLES W. WEST.

Witnesses:
E. B. HOUSE,
J. C. IRWIN.

Copies of this patent may be obtained for five cents each, by addressing the "Commissioner of Patents, Washington, D. C."