April 28, 1925. 1,535,350

E. C. STACY

METHOD OF MAKING SWIVEL LINKS

Filed July 2, 1924

Fig. 1.

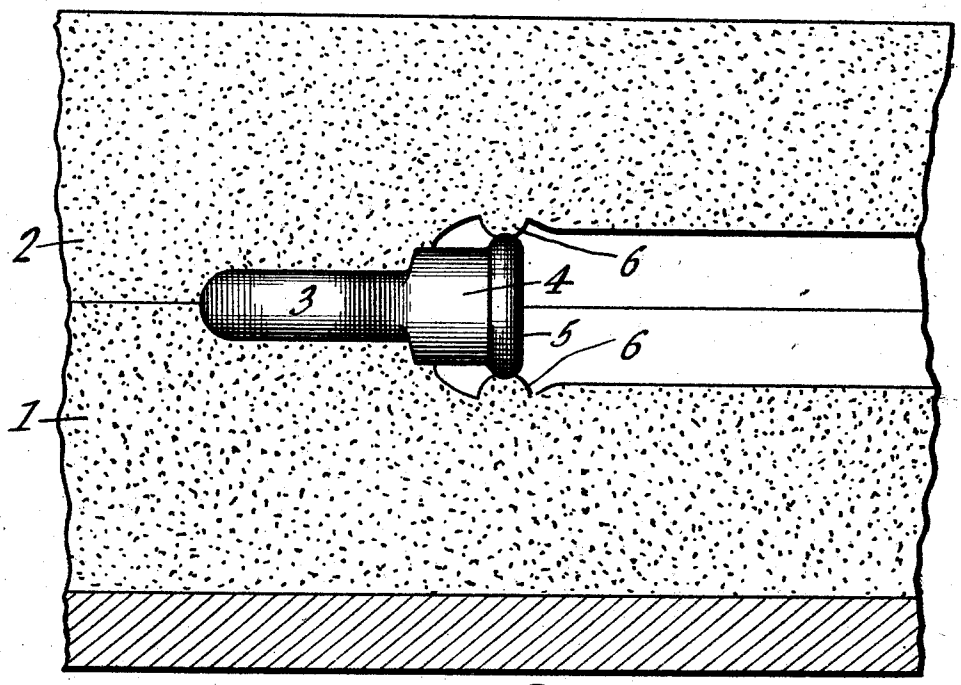

Fig. 2.

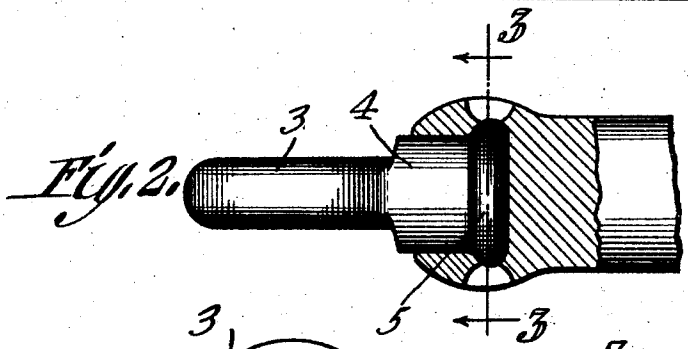

Fig. 3.

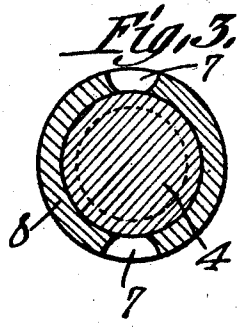

Fig. 4.

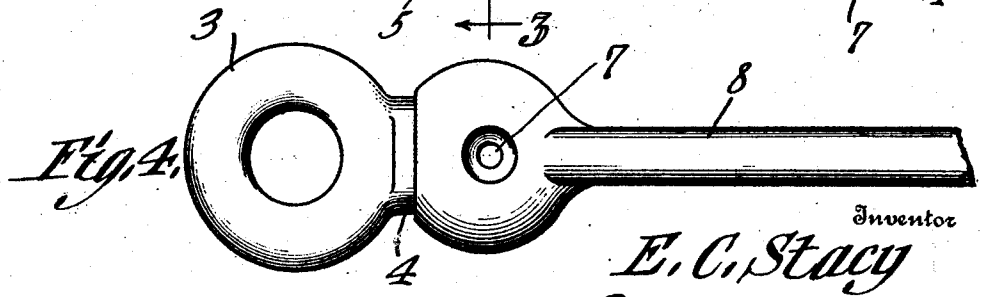

Inventor

E. C. Stacy

By C. A. Snow & Co.

Attorneys

Patented Apr. 28, 1925. 1,535,350

UNITED STATES PATENT OFFICE.

EUGENE C. STACY, OF TIFFIN, OHIO.

METHOD OF MAKING SWIVEL LINKS.

Application filed July 2, 1924. Serial No. 723,778.

To all whom it may concern:

Be it known that I, EUGENE C. STACY, a citizen of the United States, residing at Tiffin, in the county of Seneca and State of Ohio, have invented a new and useful Method of Making Swivel Links, of which the following is a specification.

This invention relates to a method of making swivel links, the link being more especially designed for use in connection with load binders such as shown, for example, in my copending applications of even date herewith.

In a load binder, it is desirable to have a link, yoke or the like in which the eye portion is mounted for rotation. Heretofore in the production of devices of this character it has been the practice to properly position the eye portion of the member within a mold after which the metal for producing the link or yoke portion has been poured into the mold so as to surround a part of the eye portion. When pouring hot metal into a mold containing cold metal, a gas is generated which will always escape at the point or points of least resistance. This gas is due primarily to a slight amount of moisture which condenses upon the cold metal and is converted into gas by the intense heat of the molten metal coming into contact with the cold metal. Heretofore in the production of links or the like having swivel heads, there has been a considerable waste of time and material due to the large percentage of defective castings produced because of the uncontrolled venting of the generated gases.

It is an object of the present invention to provide a means whereby the generated gases produced during the formation of a casting having a swivel or the like will be caused to vent at predetermined points with the result that perfect castings will be produced and loss due to defective venting is reduced to the minimum.

With the foregoing and other objects in view, which will appear as the description proceeds, the invention resides in certain novel steps in the method hereinafter pointed out, it being understood that changes in the precise embodiment of the invention herein disclosed may be made within the scope of what is claimed without departing from the spirit of the invention.

In the drawings—

Figure 1 is a section through a mold showing the eye member of a swivel link positioned therein ready to be combined with molten metal admitted to the mold.

Fig. 2 is a view partly in elevation and partly in section through a portion of the swivel link produced by the method constituting the present invention.

Fig. 3 is a section on line 3—3, Fig. 2.

Fig. 4 is a plan view of the structure shown in Fig. 2.

Referring to the figures by characters of reference 1 and 2 designate opposed portions of a mold between which is supported the eye portion 3 of the swivel link to be produced. This eye portion is of metal previously cast and includes a cylindrical stem 4 having an annular rib or flange 5. The sand in the mold is so shaped by the pattern as to provide two or more nodes 6, which extend up to and contact with the flange or rib 5. Thus it will be seen that when molten metal is admitted to the mold it will flow around the stem 4 and rib flange 5 and also around the nodes 6. Consequently the link thus produced will have the stem 4 and rib 5 embedded therein but recesses 7 will be provided in the link through the provision of the nodes 6 which will open into the space occupied by the rib 5.

When the metal is poured into the mold any moisture which may have condensed upon the stem 4 and rib 5 is converted into gas which will flow along the surface of the stem 4 and seep into the sand forming the nodes 6. This course will be followed by the gases because it is the path of less resistance and, consequently, the article 8 produced will not be formed with blows or defective places where it opens around the stem 4 but, instead, will be left with perfectly outlined recesses 7 through which the gases have escaped.

It has been found in practice that the production of swivel links by the method herein disclosed effects a great saving because imperfect castings are reduced to the minimum and more efficient articles are produced than by methods heretofore followed.

What is claimed is:—

1. The herein described method of producing a swivel link which consists in placing an eye member within a mold, forming sand nodes within the molds so as to extend toward and touch the swivel member, and then pouring molten metal into the mold,

said nodes constituting means for providing seepage of gas generated around the eye member during the pouring of the metal.

2. The herein described method of producing swivel links and the like which includes the placing within a mold of a swivel member having a round stem and an annular flange, forming a sand node within the mold to engage the rib, and then pouring molten metal into the mold, the sand node constituting a vent for gases generated adjacent the swivel member during the pouring of the metal.

3. The herein described method of producing swivel links which includes forming a sand node within a mold, said node projecting into the cavity in the mold, positioning within the mold a swivel member having a round stem and an annular flange, said flange being in contact with the node, and subsequently, pouring molten metal into the cavity around the stem, said node constituting a vent for gases generated adjacent the swivel member.

In testimony that I claim the foregoing as my own, I have hereto affixed my signature in the presence of a witness.

EUGENE C. STACY.

Witness:
W. M. MYERS.