June 24, 1941. M. H. ARVESON 2,246,654

HYDROCARBON CONVERSION SYSTEM

Filed Dec. 30, 1939 3 Sheets-Sheet 1

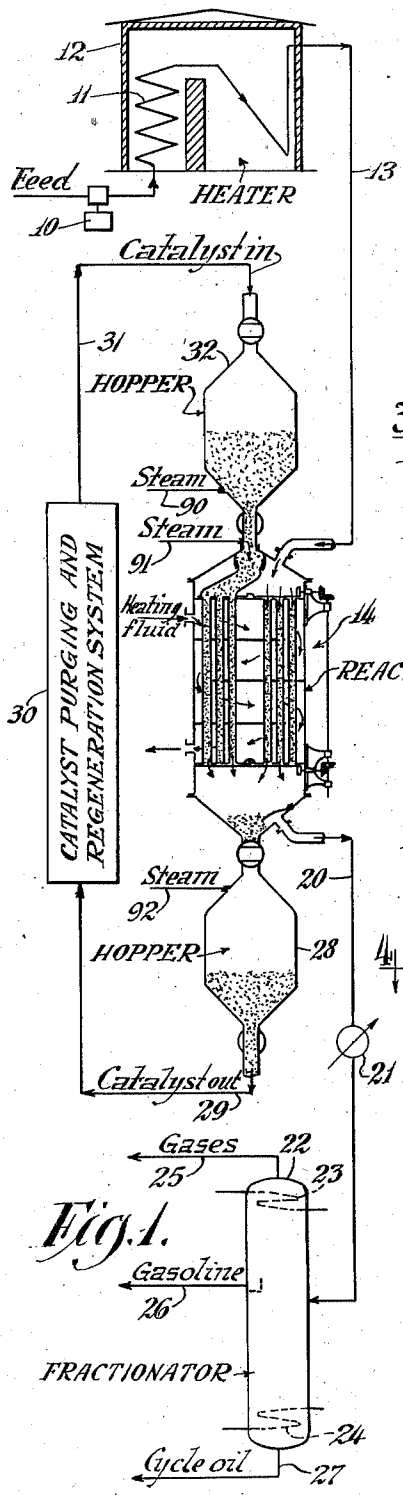

Fig. 1.

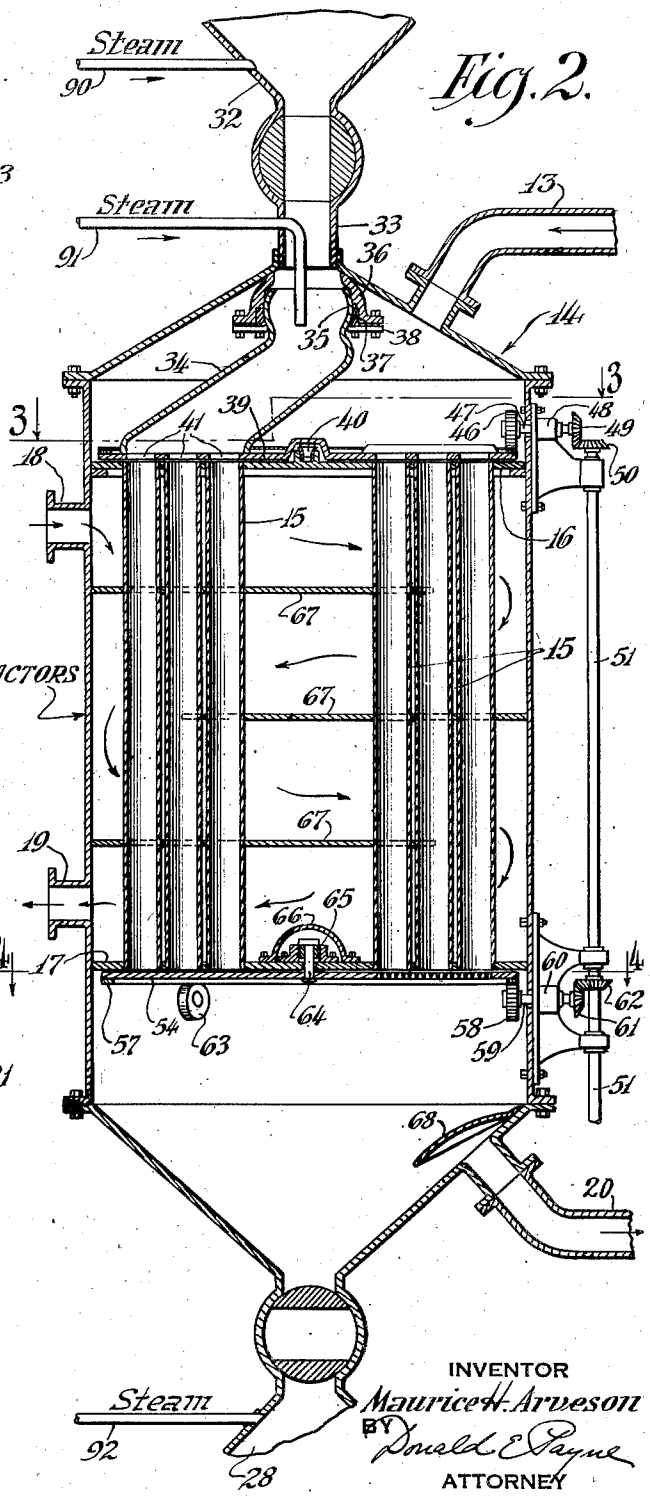

Fig. 2.

INVENTOR
Maurice H. Arveson
BY Donald E. Payne
ATTORNEY

June 24, 1941. M. H. ARVESON 2,246,654

HYDROCARBON CONVERSION SYSTEM

Filed Dec. 30, 1939 3 Sheets-Sheet 2

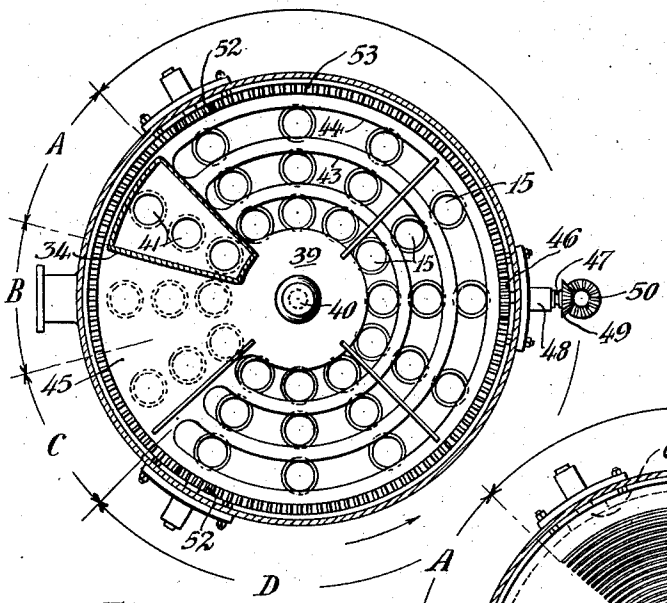

Fig. 3.



Fig. 5.

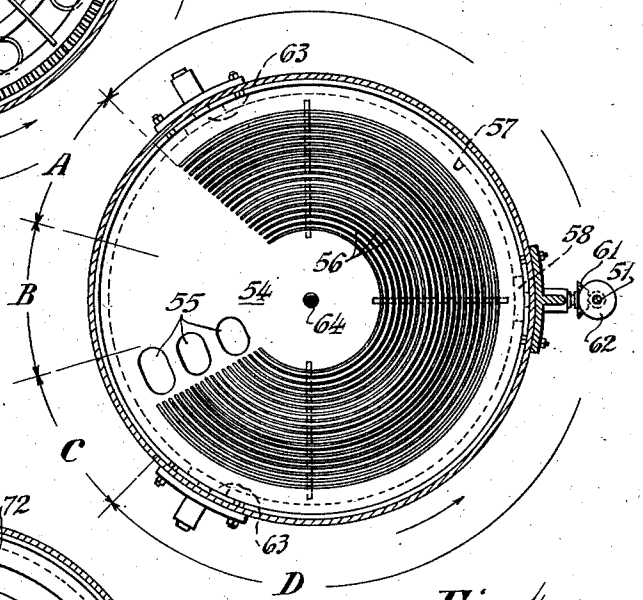

Fig. 4.

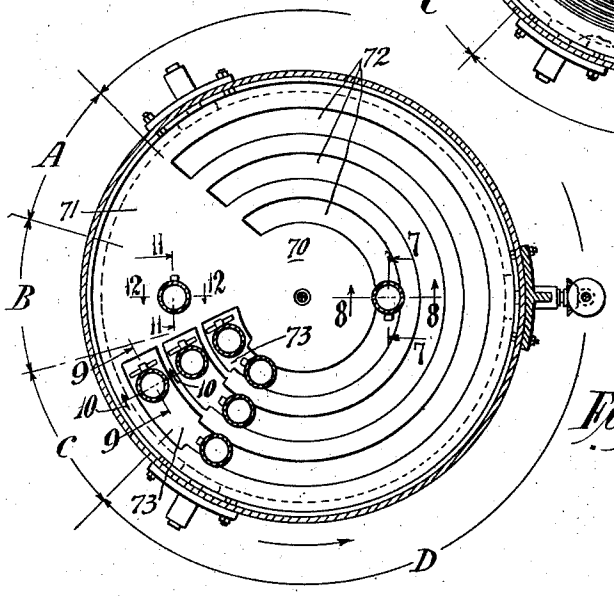

Fig. 6.

INVENTOR
Maurice H. Arveson
BY Donald C. Payne
ATTORNEY

June 24, 1941. M. H. ARVESON 2,246,654

HYDROCARBON CONVERSION SYSTEM

Filed Dec. 30, 1939 3 Sheets-Sheet 3

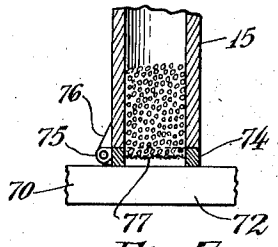

Fig. 7.

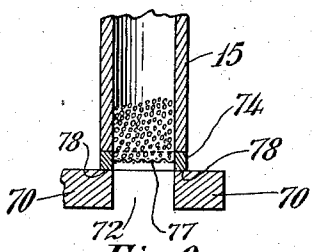

Fig. 8.

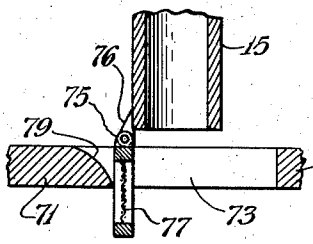

Fig. 9.

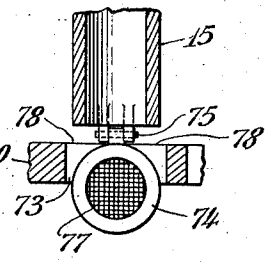

Fig. 10.

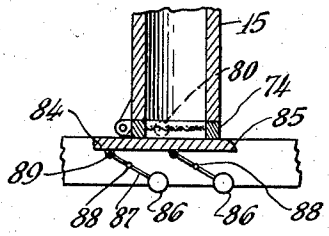

Fig. 15.

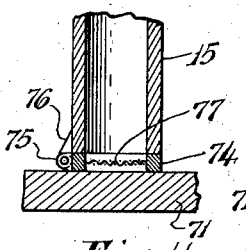

Fig. 11.

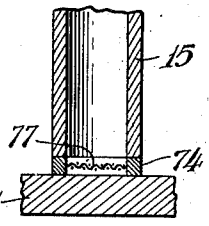

Fig. 12.

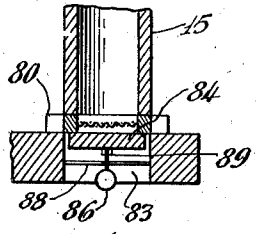

Fig. 16.

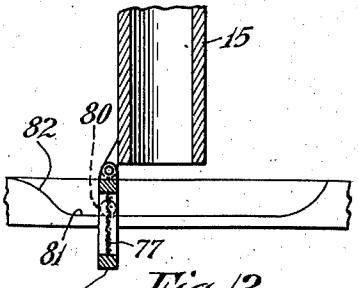

Fig. 13.

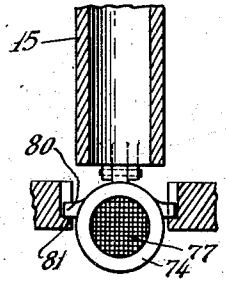

Fig. 14.

INVENTOR
Maurice H. Arveson
BY
Donald E. Payne
ATTORNEY

Patented June 24, 1941 2,246,654

UNITED STATES PATENT OFFICE

2,246,654

HYDROCARBON CONVERSION SYSTEM

Maurice H. Arveson, Flossmoor, Ill., assignor to Standard Oil Company, Chicago, Ill., a corporation of Indiana

Application December 30, 1939, Serial No. 311,886

16 Claims. (Cl. 196—52)

This invention relates to an improved hydrocarbon conversion of a type suitable for use in processes of catalytic cracking, isomerization, reforming, aromatization, polymerization, alkylation, desulfurization, hydrogenation, dehydrogenation, etc. More particularly the invention relates to an improved method and means for charging and removing catalyst to a catalyst reactor without interrupting the conversion in the reactor.

Large scale catalytic cracking plants have heretofore been of two types: (1) the stationary or fixed bed type, and (2) the moving bed or continuous type. The object of my invention is to provide a new type of catalytic system which will avoid the disadvantages of both previous types while retaining advantages of both.

Fixed bed catalyst systems are exemplified by the so-called Houdry plants wherein nested perforated tubes are imbedded throughout the catalyst mass for charging and withdrawing gases and vapors to and from said mass. The cost of such a reactor is enormous and it requires an exhorbitantly large number of valves most of which must be automatically operated. When used for catalytic cracking the on-stream period is only a matter of minutes and the catalyst is regenerated in situ, the regeneration usually requiring two or three times as long as the on-stream period. Wide temperature ranges are involved in going over from on-stream to regeneration and from regeneration back to on-stream periods, thus placing a severe mechanical strain on the apparatus structure and making it impossible to obtain uniform reaction conditions during the on-stream catalytic conversion period. The problem of temperature control during regeneration makes it necessary to employ such exhorbitantly expensive expedients as fused salt heat exchangers throughout the catalyst mass. The continuously changing temperature conditions (and also pressure conditions) within the chamber make it impossible for the chamber to effect conversion with maximum efficiency throughout the on-stream period and this in turn means lowered yields, lowered product quality and increased losses to gas and coke. An object of my invention is to provide a system which will avoid the difficulties hereinabove enumerated and the many other difficulties which are inherent in fixed bed catalyst conversion operations.

In moving bed operations the catalyst itself flows through the reaction chamber either concurrent with or countercurrent to the flow of hydrocarbon vapors undergoing conversion and the spent catalyst material is regenerated outside of the conversion zone and then returned for further use. In this system the temperature and pressure conditions in the conversion zone are maintained constant, and the conversion is continuous under substantially optimum conditions so that maximum product quality and maximum yields are obtainable. In such systems, however, the problem of regulating catalyst flow through the tubes has not been and perhaps cannot be satisfactorily solved. If any particular tube discharges too rapidly or for some other reason is emptied it forms a bypass through which the hydrocarbons flow without coming in contact with the catalyst material. If catalyst material becomes stagnant there is a tendency for coke formation and tube plugging which may require removing the entire tube. An object of my invention is to avoid these and the many other inherent disadvantages of continuous or moving bed catalyst systems while at the same time retaining the advantages of said systems.

A further object of the invention is to provide an improved catalytic reactor with positive means for renewing catalyst therein (i. e. discharging spent catalyst therefrom and adding fresh catalyst thereto) without interrupting the flow of hydrocarbon vapors through the reactor, without permitting the by-passing of hydrocarbon vapors through empty tubes and without requiring the regulation of catalyst flow through the tubes. A further object is to avoid catalyst abrasion and disintegration which has heretofore been caused by means for regulating catalyst flow; in other words, it is my object to reduce to a minimum the production of catalyst fines and the loss of catalyst from this and other sources.

A further object is to provide an improved catalytic conversion system which will operate under substantially constant conditions of temperature and pressure and produce maximum yields of high quality motor fuel with minimum losses to gas and coke. A further object is to provide improved means for preventing incoming catalyst from being fouled by carbon deposits resulting from contact of hydrocarbon vapors with catalyst prior to the introduction of the catalyst into the conversion tubes. A further object is to provide an improved means for distributing catalyst material in reaction tubes or beds. A further object is to provide improved means for discharging catalyst from a catalyst bed while the reactor is on-stream. A further object is to provide method and means for completely emptying one

section of a reactor and then filling that section of the reactor with catalyst without disturbing other catalyst sections and without permitting any appreciable flow of gases or vapors through the tube during the emptying step, while empty, and during the filling step. Other objects of the invention will be more fully understood as the following detailed description thereof proceeds.

I have discovered that the advantages of moving bed catalyst systems may be obtained without the inherent disadvantages of said systems by dispensing entirely with the regulating means heretofore employed for controlling the rate of catalyst flow through the reactor, stopping the vapor flow through each tube when the catalyst therein becomes spent, completely discharging the catalyst therefrom without permitting vapor flow therethrough, filling the tube with fresh catalyst while it remains effectively cut out of the system and then passing hydrocarbons through the tube until the catalyst therein becomes spent once more.

Although the invention is subject to various forms and modifications I prefer to employ a cylindrical chamber provided with a plurality of catalyst tubes or sectors which may be surrounded by a heat exchange medium. A rotating upper member seals the ends of the tubes which are being emptied, charges fresh catalyst into the empty tube sector or cell and prevents the introduced hydrocarbons from contacting freshly introduced catalyst prior to the actual placement of the catalyst in the tubes. A lower rotating member holds the catalyst in those tubes through which hydrocarbon vapors are being passed, permits the discharge of catalyst materials which have become spent, and seals the lower ends of the tubes which are empty or which are being filled with catalyst material. These upper and lower members are rotated in unison either continuously or intermittently so that the catalyst in each tube is on-stream for a time sufficient for its maximum effectiveness, then completely emptied of spent catalyst material, recharged with fresh catalyst material and returned to on-stream position. The invention will be more readily understood from the following detailed description read in conjunction with the accompanying drawings wherein similar parts are designated by like reference characters in the several figures and wherein,

Figure 1 is a vertical cross section of a simplified form of my improved catalytic reactor shown in conjunction with a schematic flow diagram of other parts of the conversion system;

Figure 2 is an enlarged vertical section of the reactor shown in Figure 1;

Figure 3 is a horizontal cross section taken along the line 3—3 of Figure 2;

Figure 4 is a cross section through the reactor taken along the line 4—4 of Figure 2;

Figure 5 is a detail cross section of the grating illustrated in Figure 4;

Figure 6 is a section taken along the line 4—4 of Figure 2 showing a modified lower plate structure for use with hinged screens;

Figure 7 is a detail section taken along the lines 7—7 of Figure 6;

Figure 8 is a detail section taken along the lines 8—8 of Figure 6;

Figure 9 is a detail section taken along the lines 9—9 of Figure 6;

Figure 10 is a detail section taken along the lines 10—10 of Figure 6;

Figure 11 is a detail section taken along the lines 11—11 of Figure 6;

Figure 12 is a detail cross section along the lines 12—12 of Figure 6;

Figures 13 and 14 are detail sections similar to Figures 9 and 10 wherein a cam surface coacts with a lug on the hinged screen frame for positioning the latter, and

Figures 15 and 16 show a modification of the structure shown in Figures 11 and 12, wherein a vertically movable closure plate is held against the lower end of the tubes by pivoted weights.

While the invention is applicable to innumerable hydrocarbon conversion processes it will be described in connection with a catalytic cracking process for converting gas oil to high quality motor fuel. The catalyst for such a process is preferably of the silica alumina type and it may consist essentially of natural clay such as bentonite which has been acid-treated or otherwise activated to remove objectionable impurities (an example of which is acid-treated bentonite commercially marketed as Super Filtrol). Alternatively, the catalyst may consist essentially of silica gel with a metal oxide associated therewith or deposited thereon; a preferred catalyst of this type is silica gel having about 15% to 25% of alumina deposited thereon by impregnation, adsorption, coprecipitation or other known means. Oxides of other metals such as thorium, magnesium, copper, nickel, manganese, titanium, beryllium, cerium, zirconium, boron, etc. may be used with or in place of alumina.

For hydrogenation, dehydrogenation, reforming and aromatization the catalysts are preferably Group VI metal oxides deposited on alumina, although other metal oxides such as vanadium oxide, cerium oxide, etc. may be used. For polymerization the catalyst may consist of kieselguhr impregnated with phosphoric acid or it may comprise copper pyrophosphate on activated carbon. For isomerization or desulfurization the catalyst may be bauxite, active alumina, activated clays, etc. The catalysts per se form no part of the present invention and they will not be described in further detail. It should be understood, however, that any type of catalyst may be used which will effect the desired conversion and the catalyst may be in granular, molded, pelleted, extruded or any other form. Preferably the catalyst particles are of fairly uniform size, although the particle size may range from about 1 inch to about 200 mesh.

Referring to Figures 1 and 2 of the drawings, gas oil is forced by pump 10 through coils 11 of pipe still 12 and introduced by transfer line 13 into the upper part of reactor 14. In this reactor there are a plurality of substantially vertical tubes 15 with their upper ends welded to tube sheet 16 and their lower ends welded to tube sheet 17. The space in the reactor vessel which is outside of the tubes and which is bounded by tube sheets 16 and 17 may contain any heating fluid such as flue gases, fused salts, mercury, diphenyl, etc. introduced through line 18 and withdrawn through line 19. The temperature of the catalyst in tubes 15 may be about 800° to 1000° F., preferably about 900° F., and the space velocity of hydrocarbon vapors through the catalyst tubes is about 0.2 to 4.0, preferably about 1, volumes of charging stock (liquid basis) per volume of catalyst space per hour. The pressure in the reactor is about atmospheric to 100 pounds per square inch, preferably about 25 to 50 pounds per square inch. The details of the reactor per

se are described more fully in succeeding paragraphs.

The treated vapors are withdrawn through line 20 and cooler or heat exchanger 21 to fractionating system 22 which is diagrammatically illustrated as a tower having reflux coils 23 and reboiler coils 24. Gases are taken overhead through line 25, gasoline is withdrawn through line 26 and heavier products such as cycle oil are withdrawn through line 27.

Spent catalyst is withdrawn from the base of reactor 14 through sealed hopper 28 and returned by line 29 to any suitable system 30 for stripping hydrocarbons out of the catalyst, regenerating the spent catalyst and removing oxygen from the regenerated catalyst. The removal of hydrocarbons from the catalyst or "purging" may be effected by stripping with steam, a hydrocarbon gas or any other suitable inert gas, or it may be effected by the use of a vacuum. The regeneration may be effected in a burner utilizing recirculated flue gas as illustrated in Wilson Patent No. 1,520,493. Preferably the regeneration is effected under a pressure of about 25 to 125 pounds per square inch since such pressure lowers the kindling point of the carbonaceous material in the catalyst and makes possible the use of larger amounts of recirculated flue gas (for absorbing and withdrawing the heat of regeneration) without unduly increasing the velocity of the gases flowing through the regeneration system. Regeneration may likewise be effected in a louvered type continuous system described and claimed in my copending application Serial No. 309,448. Since regeneration per se forms no part of the present invention it will not be described in further detail. The regenerated catalyst which is preferably at a temperature of about 850° to 900° F. is returned by line 31 to seal hopper 32 from which it is introduced into reactor 14.

Referring more specifically to the reactor structure, the catalyst from hopper 32 discharges through valved conduit 33 into the rotating feeder pipe 34, the upper part of which is formed into a curved annular flange 35 rotating in and closely fitting against the inner curved bearing surface of member 36 which may be the lower end of conduit 33 or a separate element welded to the top of chamber 14. Packing material 37, such as asbestos, held by bolted plate 38 helps to maintain the vapor seal and hold curved flange 35 against bearing 36 while permitting the rotation of feeder 34 around a vertical axis.

The lower discharge end of feeder pipe 34 is welded to a rotating disk plate 39 which is centered by central bearing member 40. Plate 39 has holes 41 under feeder tube 34 through which catalyst may flow from feeder pipe 34 into tubes 15. Plate 39 is also provided with annular slots 43 and 44, which slots extend from the juncture of feeder pipe 34 to a point about 270° therefrom, the width of said slots being substantially the same as the inside diameter of the tubes. Between the ends of these slots and the other side of the juncture with feeder 34, plate 39 is provided with imperforate portion 45. This portion of the plate acts as a seal for tube ends during the discharge of spent catalyst from the tubes.

The lower part of rotatable plate 39 is machined to give a fairly tight fit with the upper ends of the tubes. This plate is rotated by pinion wheel 46 mounted on shaft 47 extending through packing gland 48 and driven by beveled gear 49 meshing with beveled gear 50 which in turn is fixed to shaft 51 driven by any suitable motor not shown. Idling pinions 52 hold the plate in place during its rotation, pinions 46 and 52 meshing with ring gear or rack 53.

In the position illustrated in Figure 3 and with plate 39 moving counterclockwise in the direction of the arrow the catalyst material from feeder 34 is filling the tubes through openings 41 in zone A, the tubes in zone B are empty, the tubes in zone C are discharging spent catalyst and the tubes in zone D are on-stream. As the plate continues to rotate the tubes in zone A will go on-stream, the tubes in zone B will be filled, the tubes in zone C will be in the neutral zone and the next tubes in succession will be emptied. This operation will be more fully understood after the description of the catalyst discharge means.

Adjacent and bearing against the bottom of tubes 15 is another rotatable plate 54 (see Figure 4) which is imperforate in zones A and B, provided with somewhat horizontal elongated apertures 55 in zone C and provided with recesses 56 in zone D. The recesses may be in the form of apertures or annular slots, the preferred structure being a wedge-shaped grating, as indicated by Figure 5. The function of these slots, apertures or similar structures is to form a support for catalyst material in the tubes and to permit the flow of hydrocarbon vapors from the tubes to the lower part of the reaction chamber. The wedge-shaped structure illustrated in Figure 5 is effective for preventing the clogging of the grating structure with catalyst particles.

The outer edge of plate 54 is provided with the beveled gear or annular rack 57 driven by pinion 58 mounted on shaft 59 extending through packing gland 60 and carrying a beveled gear 61 meshing with beveled gear 62 keyed to shaft 51. Idling pinion supports 63 cooperate with pinion 58 in supporting plate 54 and holding it in place to maintain a close fit between the upper part of the plate and the lower ends of tubes 15.

As plate 54 is rotated in the indicated counterclockwise direction it will be seen that the upper ends of the tubes in zones A and B are sealed while the tubes in zone C are discharging spent catalyst through apertures 55, all of the remaining tubes being on-stream with vapors flowing through the grating or the annular slots 56. The imperforate section of plate 54 which is in zones A and B seals the lower ends of the tubes which are being filled and the tubes which have just been emptied. This imperforate section extends for sufficient area to prevent any overlapping of tubes which are being filled and emptied respectively. While the tubes in zone C are being emptied through slots 55 the upper ends of those tubes are sealed by the imperforate portion 45 of upper plate 39. Thus all tubes which are not actually on-stream are effectively sealed against the passage of hydrocarbon vapors therethrough. It will be understood, of course, that plates 39 and 54 are rotated together at the same speed, either continuously or intermittently. I prefer to allow sufficient registration of the apertures 55 at the lower ends of the tubes to completely discharge the catalyst from said tubes but it should be understood that a more rapid rotation of the plates may effect only partial removal of the catalyst from the tubes.

To center plate 54 and hold it snugly against the lower ends of tubes 15 I provide shaft 64 which turns in bearing 65. A gas-tight cap 66

makes it unnecessary to use a packing gland at the point where shaft 64 extends through tube sheet 17, although such packing gland may be, of course, used.

Baffles 67 may be employed in the reactor around the tubes to prevent short circuiting of the heating fluid. Baffle 68 prevents discharged catalyst material from escaping through line 20 with reaction products.

A preferred modification of my catalyst chamber is illustrated in Figures 6 to 16, inclusive, and while this form is slightly more complicated than the form hereinabove described it offers the further advantage of preventing abrasion and catalyst disintegration due to the shearing effect of the rotating grating under the catalyst tubes. In this preferred modification the upper plate and catalyst distributing mechanism may be as previously described, but instead of employing a simple plate with perforations or grooves, as illustrated in Figure 4, I employ a hinged screen at the base of each tube with means for holding these screens snugly against the ends of the tubes while the tubes are on-stream, means for permitting the screens to pivot on their hinge for discharging spent catalyst and means for sealing the tubes prior to and during the catalyst charging step.

Referring to Figure 6, I provide a plate 70 which is supported and rotated in exactly the same manner as plate 54 hereinabove described. This plate contains an imperforate section 71 illustrated in zones A and B. It contains a plurality of concentric slots 72 which may extend approximately 270° around the plate and which slots are similar to slots 43 and 44 in plate 39. The width of these slots is approximately equal to the inside diameter of the tubes or, more exactly speaking, to the inside diameter of the screen supports as will be hereinafter described. In zone C I increase the width of the slots to make them wider than the outside diameter of the screen supports, thus providing tube dumping apertures 73 which are equivalent in function to the apertures 55 of plate 54.

Referring to Figures 7 to 12, I provide each tube 15 with an annular screen support 74 which fits snugly against the lower end of the tube. This annular screen support is secured to one side of hinge 75, the other side of the hinge being secured to tube sheet 17 or to the lower end of the tube itself by a suitable bracket 76. Annular screen support 74 carries a screen or grating 77 for supporting catalyst material in tubes 15 while permitting the flow of vapors therethrough.

In zone D the annular screen support 74 is held against the end of tube 15 by bearing surfaces 78 on plate 70 on both sides of slot 72. Thus as plate 70 rotates in a counter-clockwise direction there is no abrasion of catalyst material against the rotating plate but merely a sliding contact between the rotating plate and the annular screen support. When zone C reaches each particular screen support bearing 78 is discontinued and the enlarged slot opening permits the screen support to pivot downwardly on its hinge as shown in Figure 9. Thus in zone C the spent catalyst may be discharged from the tube.

As the plate continues to rotate the screen support is forced back into position against the lower end of the tube by surface 79 on the imperforate section 71 of plate 70 so that when zones B and A are under the tubes this imperforate section 71 of plate 70 effectively seals the lower ends of the tubes and prevents gases and vapors from flowing into or out of said tubes. This position of the tubes is shown in Figures 11 and 12. While the tubes are thus sealed and catalyst screen supports are supported and sealed by imperforate plate section 71 the tubes are recharged with fresh catalyst as hereinabove described. On continued rotation of the plate the screen supports are held in place by bearing surfaces 78 while hydrocarbons pass through the catalyst through slot 72.

Instead of supporting the edges of annular screen supports 74 on bearing surfaces 78 I may make the slots 72 slightly greater in width than the outside diameter of screen supports 74 and I may provide the screen supports with lugs 80 as illustrated in Figures 13 to 16. These lugs slide on bearing surfaces 78 in zone D but in zone C there is a cam-like depression 81 in bearing surface 78 which permits the screen support to pivot on its hinge and discharge spent catalyst. Cam surface 82 forces the screen support back against the lower ends of the tubes in the same manner that inclined surface 79 repositions the screen supports.

Instead of employing a simple imperforate plate section 71 I may provide zones A and B with annular slots or recesses 83 provided with annular plates 84 machined to fit snugly against the lower surfaces of annular screen supports 74 and to seal the same. Plates 84 are preferably provided with inclined surfaces 85 which serve somewhat the same function as inclined surfaces 79 and 82. These plates may be held tightly against the annular screen support 74 by means of weights 86 mounted on the ends of bars 87 which are pivoted on pins 88 and pivotally connected to the lower part of plates 84 by connection 89. By making the distance between weight 86 and pivot 88 materially longer than the distance between pivot 88 and connection 89 the desired leverage may be obtained for exerting sufficient upward pressure against plate 84 to effectively seal the lower ends of tubes 15 against both the weight of catalyst and pressure.

In all of the modifications hereinabove described it will be seen that I have provided means for emptying and refilling tubes in a reaction chamber without permitting or at least reducing to a very minimum the entrance of hydrocarbon vapors into said tubes during and between said filling and emptying steps. It will be noted that I have avoided the necessity of controlling or regulating the continuous flow of catalyst material through the catalyst tubes and at the same time I have obtained all of the advantages of the continuous moving bed catalyst system. In the modification described in Figures 6 to 16 I have provided means for preventing catalyst abrasion. In short I have obtained all of the advantages of continuous operation without the inherent difficulties of that system and at the same time I have obtained the advantages without the disadvantages of a fixed bed catalyst system.

To positively insure against leakage of hydrocarbon vapors into feeder pipe 34 or into the sealed hoppers, an inert gas may be introduced thereinto through lines 90, 91, 92 etc. to maintain the necessary pressure.

My invention is not limited to the particular structure or to the particular modifications herein disclosed since many alternative structures and modifications of the invention will be apparent to those skilled in the art from the above description. The word "tube" or "tubes" in the follow-

ing claims are hereby defined to include not only circular conduits but conduits of any other contour, in other words, a "tube" is a conduit which may be alternately filled with catalyst at one end and from which catalyst may be discharged at the other.

I claim:

1. In a catalytic hydrocarbon conversion system comprising a catalytic reaction chamber containing a plurality of tubes adapted to contain catalyst, the method of effecting continuous operation, which method comprises periodically emptying catalyst from at least one of said tubes while other of said tubes remain on-stream, charging fresh catalyst into said emptied tube while other of said tubes remain on-stream and preventing the by-passing of hydrocarbon vapors through said tube while it is empty and while catalyst material is being discharged therefrom and charged thereto.

2. The method of effecting continuous catalytic conversion which comprises mounting a plurality of catalyst tubes in a reaction chamber, maintaining certain of said tubes full of catalyst while other of said tubes are being emptied and filled with catalyst material, preventing the passage of vapors through each tube while it is empty and while it is being emptied and filled, removing spent catalyst material from the reaction zone without interrupting the flow of hydrocarbon vapors in said zone, and introducing catalyst to said reaction zone without interrupting the flow of hydrocarbon vapors in said zone.

3. The process of claim 2 wherein catalyst introduced into the system is kept out of contact with hydrocarbon vapors until it is positioned in said tubes.

4. The method of renewing catalyst in one of a plurality of tubes adapted to contain catalyst without interrupting the flow of hydrocarbons through other of said tubes, which method comprises enclosing a plurality of tubes in a catalytic reaction chamber, sealing the top of one of said tubes and opening the bottom thereof to permit the discharge of spent catalyst therefrom in a catalyst discharge zone, sealing the bottom of said tube while catalyst is being introduced into the top thereof in a catalyst charging zone and spacing the discharge zone sufficiently far from the charging zone to prevent the simultaneous charging and discharging of said catalyst tube.

5. The method of claim 4 which includes the further step of maintaining a positive inert gas pressure in the catalyst charging zone sufficient to prevent leakage of hydrocarbons thereinto.

6. In a catalytic conversion system a catalyst reactor chamber, a plurality of tubes adapted to contain catalyst substantially vertically mounted in said chamber, means for selectively introducing catalyst into the top of at least one of said tubes while the top of at least one of said tubes is closed and the top of at least one of said tubes is open to the flow of hydrocarbon vapors, means for removing catalyst from the base of one of said tubes while the top of said tube is closed, means for closing the bottom of said tube while it is being charged with fresh catalyst and means for holding catalyst in the tube while permitting the flow of hydrocarbon vapors therethrough.

7. The apparatus of claim 6 which includes means in said reactor chamber for maintaining catalyst out of contact with vapors until said catalyst is deposited in said tubes.

8. In a catalytic conversion system a plurality of substantially vertical concentrically arranged tubes adapted to contain catalyst, an upper plate containing an imperforate section, a catalyst distributing section and a slotted section, a lower plate containing a catalyst discharge section, a tube sealing section and a slotted section for the passage of hydrocarbon vapors therethrough, means for simultaneously rotating both of said plates and for maintaining the imperforate and sealing section of the upper plate closely against the upper end of each tube while it is being emptied and for maintaining the tube sealing section of the lower plate closely against the lower end of each tube while it is being filled.

9. In catalytic conversion apparatus a plurality of tubes adapted to contain catalyst, a closed catalyst chamber surrounding said tubes, screen supports hinged adjacent the lower ends of said tubes, means for periodically holding said supports against said lower tube ends, means for periodically moving said holding means out of holding position so that said hinged supports may swing away from said tube ends, and means for periodically sealing said tube ends against the flow of hydrocarbon vapors.

10. In catalytic conversion apparatus comprising a closed catalyst reaction chamber containing a plurality of tubes adapted to contain catalyst and an apertured element relatively movable with respect to the lower end of said tubes, means including a movably mounted screen support at the base of each tube for keeping the catalyst out of contact with the movable element while the catalyst is on-stream, means for successively aligning the aperture of said element with each screen support so that it may move away from the tube for discharging catalyst from said tube, and means for moving the screen support back to its original position after catalyst has been discharged from said tube.

11. The apparatus of claim 10 which includes means for sealing the lower ends of the tubes after catalyst has been discharged therefrom.

12. In catalytic conversion apparatus, a reactor chamber, a plurality of tubes adapted to contain catalyst therein, means for continuously introducing hot vapors into the reactor chamber and withdrawing reaction products therefrom, means for introducing catalyst material into said chamber without interrupting the conversion therein while preventing the escape of vapors through the catalyst inlet, means for maintaining the top of each tube closed while said tube is being emptied, means for maintaining at least one end of each tube closed while the tube is empty, means for maintaining the bottom of each tube closed while the tube is being filled, means for holding the catalyst in each tube while vapors are passed therethrough, and means for removing spent catalyst from the reactor chamber while preventing the escape of gas therewith.

13. The apparatus of claim 12 wherein the means for maintaining at least one end of the tube ends closed comprises an imperforate portion of a rotatable plate.

14. The apparatus of claim 12 wherein the means for maintaining at least one of the tube ends closed comprises a plate and a gravity-actuated means for urging said plate against said tube ends.

15. In catalytic conversion apparatus, a reaction chamber, a plurality of tubes adapted to contain catalyst in said chamber, means for

selectively charging catalyst material into at least one of said tubes while other of said tubes are on-stream without by-passing hydrocarbon vapors through the tube which is being charged, means for discharging spent catalyst from at least one of said tubes while other of said tubes remain on-stream without passing hydrocarbon vapors through the tube which is being discharged, means for withdrawing spent catalyst from the reaction chamber without permitting the escape of substantial amounts of hydrocarbon vapors, and means for introducing catalyst to the reaction chamber without permitting the escape of substantial amounts of hydrocarbon vapors at the point of catalyst introduction.

16. In catalytic conversion apparatus, a catalytic reaction chamber, a plurality of tubes adapted to contain catalyst in said reaction chamber, closure means at the top and bottom of said tubes and means for operating said closure means whereby each tube is closed at its lower end while catalyst is being charged thereto, each tube is closed at its upper end when catalyst is discharged therefrom and each tube is open at both ends for the passage of hydrocarbon vapors therethrough while the tube is on-stream.

MAURICE H. ARVESON.