US00D577166S

(12) United States Design Patent

Rosenzweig

(10) Patent No.: US D577,166 S
(45) Date of Patent: ** Sep. 16, 2008

(54) **SURFACE CLEANER**

(75) Inventor: **Mark Rosenzweig**, Chestnut Hill, MA (US)

(73) Assignee: **Euro-Pro Corporation**, West Newton, MA (US)

(**) Term: **14 Years**

(21) Appl. No.: **29/281,163**

(22) Filed: **Jun. 15, 2007**

Related U.S. Application Data

(62) Division of application No. 29/208,111, filed on Jun. 24, 2004, now Pat. No. Des. 549,909.

(51) **LOC (8) Cl.** **15-05**
(52) **U.S. Cl.** **D32/38**
(58) **Field of Classification Search** D32/15, D32/17, 18, 19, 21, 22, 25, 31, 32, 33, 38, D32/39, 34, 35, 40, 50, 51; 15/41.1, 42–44, 15/46, 48, 79.1, 342, 349, 364, 388, 246.2, 15/250, 362, 412
See application file for complete search history.

(56) **References Cited**

U.S. PATENT DOCUMENTS

D293,142 S 12/1987 Kubota

(Continued)

Primary Examiner—Clare E Heflin
Assistant Examiner—Barbara Fox
(74) *Attorney, Agent, or Firm*—Womble Carlyle Sandridge & Rice, PLLC

(57) **CLAIM**

The ornamental design for a surface cleaner, as shown and described.

DESCRIPTION

FIG. **1** is a front perspective view of a first embodiment of a surface cleaner according to my novel design;

FIG. **2** is a rear perspective view of the first embodiment of the surface cleaner according to my novel design;

FIG. **3** is a top view of the first embodiment of the surface cleaner according to my novel design;

FIG. **4** is a front view of the first embodiment of the surface cleaner according to my novel design;

FIG. **5** is a rear view of the first embodiment of the surface cleaner according to my novel design;

FIG. **6** is a left side view of the first embodiment of the surface cleaner according to my novel design;

FIG. **7** is a right side view of the first embodiment of the surface cleaner according to my novel design;

FIG. **8** is a bottom view of the first embodiment of the surface cleaner;

FIG. **9** is a front perspective view of a second embodiment of the surface cleaner;

FIG. **10** is a rear perspective view of the second embodiment of the surface cleaner according to my novel design;

FIG. **11** is a top view of the second embodiment of the surface cleaner according to my novel design;

FIG. **12** is a front view of the second embodiment of the surface cleaner according to my novel design;

FIG. **13** is a rear view of the second embodiment of the surface cleaner according to my novel design;

FIG. **14** is a left side view of the second embodiment of the surface cleaner according to my novel design; and,

FIG. **15** is a right side view of the second embodiment of the surface cleaner according to my novel design.

The broken lines are for illustrative purposes only and form no part of the claimed design.

1 Claim, 11 Drawing Sheets

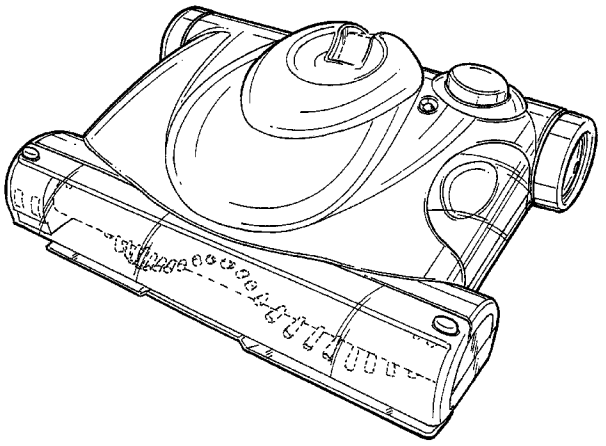

U.S. PATENT DOCUMENTS

D305,373	S		1/1990	Yamamoto et al.
D412,380	S	*	7/1999	Wareham D32/32
D418,267	S	*	12/1999	Lin D32/32
D427,399	S	*	6/2000	Thur et al. D32/33
D458,719	S		6/2002	Waldron et al.
D460,843	S		7/2002	Saimen et al.
D475,823	S	*	6/2003	Medema et al. D32/32
D501,589	S		2/2005	Carr et al.
D507,087	S		7/2005	Archer
D513,351	S		12/2005	Archer
D516,760	S		3/2006	Choi
7,013,521	B2		3/2006	Grey
D524,498	S	*	7/2006	Luebbering et al. D32/32
D537,220	S	*	2/2007	Porter et al. D32/32
D538,985	S	*	3/2007	Porter et al. D32/31
D541,498	S	*	4/2007	Moine et al. D32/32
2004/0074027	A1		4/2004	Grey
2004/0181888	A1		9/2004	Tawara et al.
2004/0221406	A1		11/2004	Grey
2004/0255411	A1		12/2004	Grey
2005/0022337	A1	*	2/2005	Roney et al. 15/412

* cited by examiner

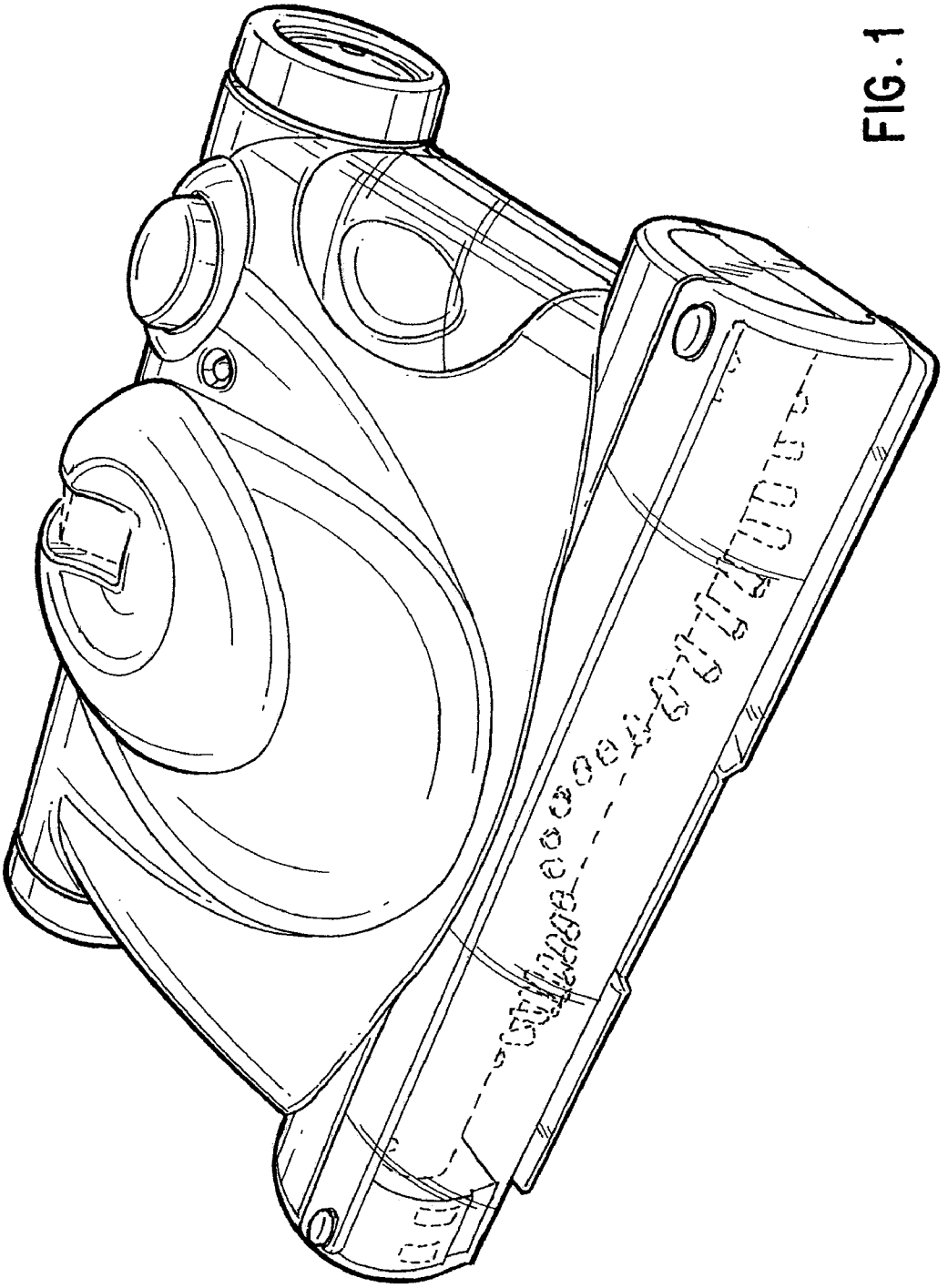

FIG. 1

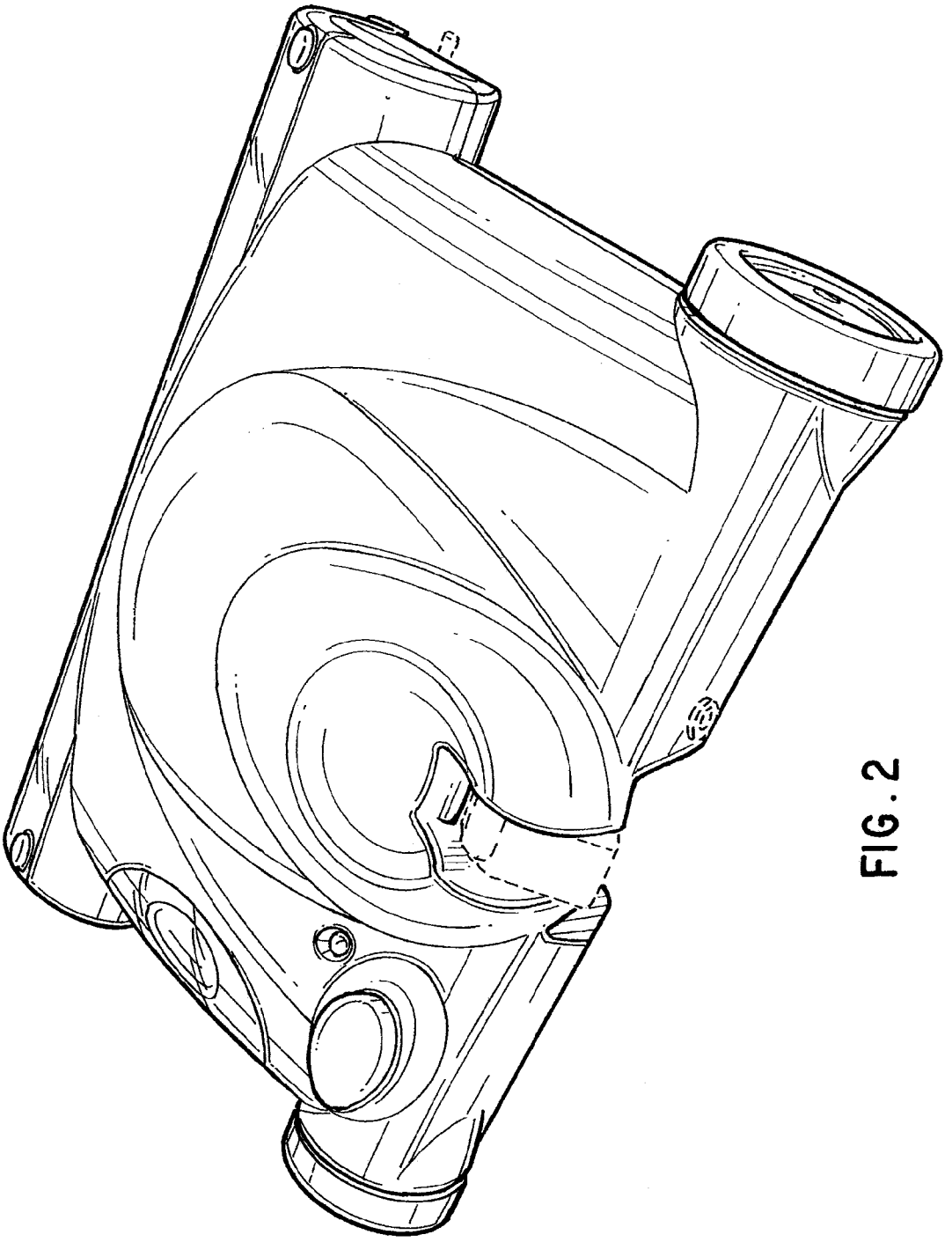

FIG. 2

FIG. 3

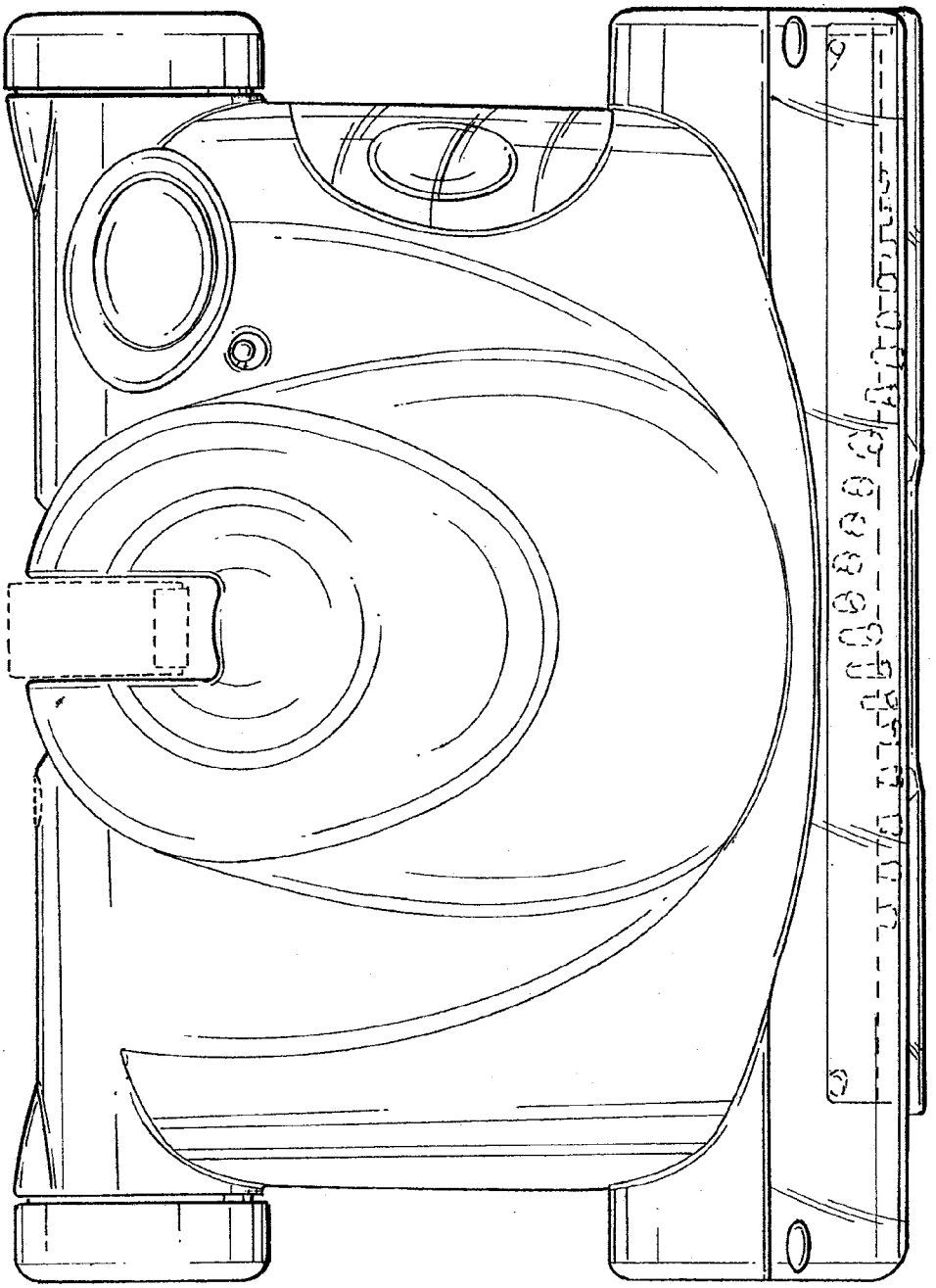

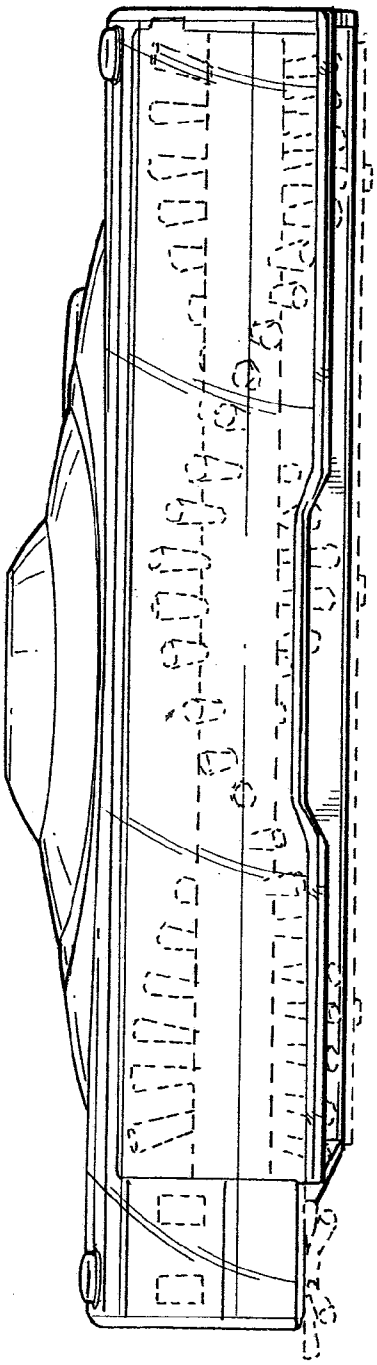

FIG. 4

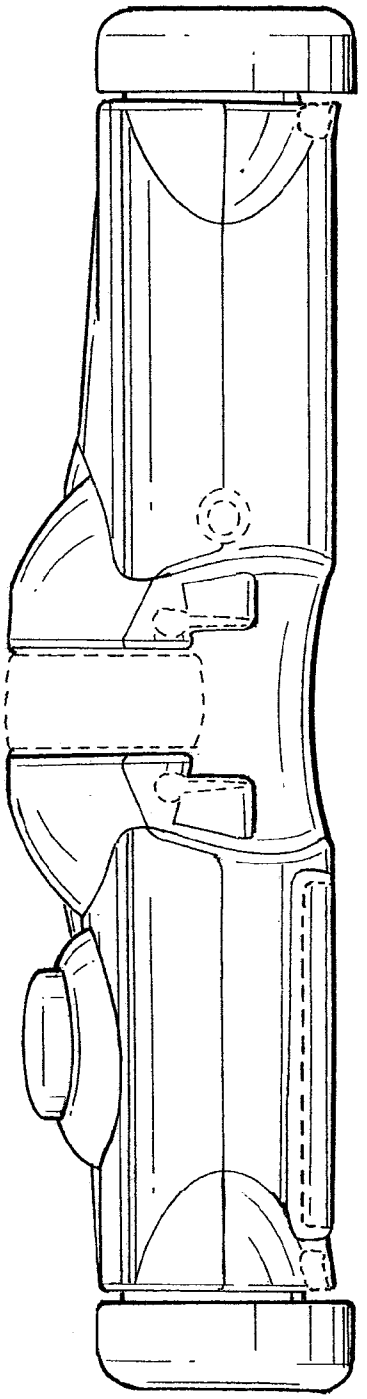

FIG. 5

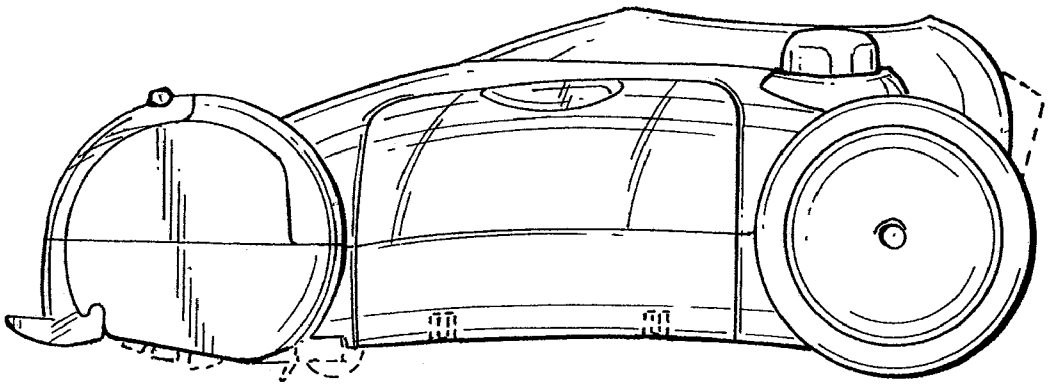

FIG. 6

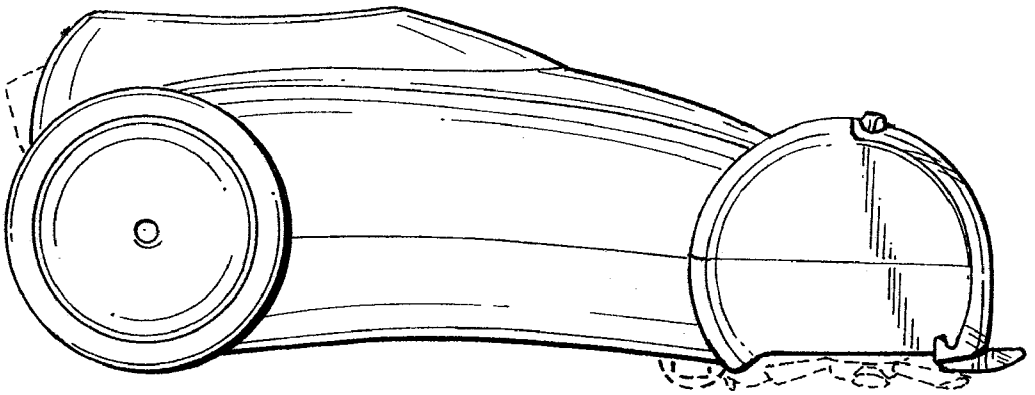

FIG. 7

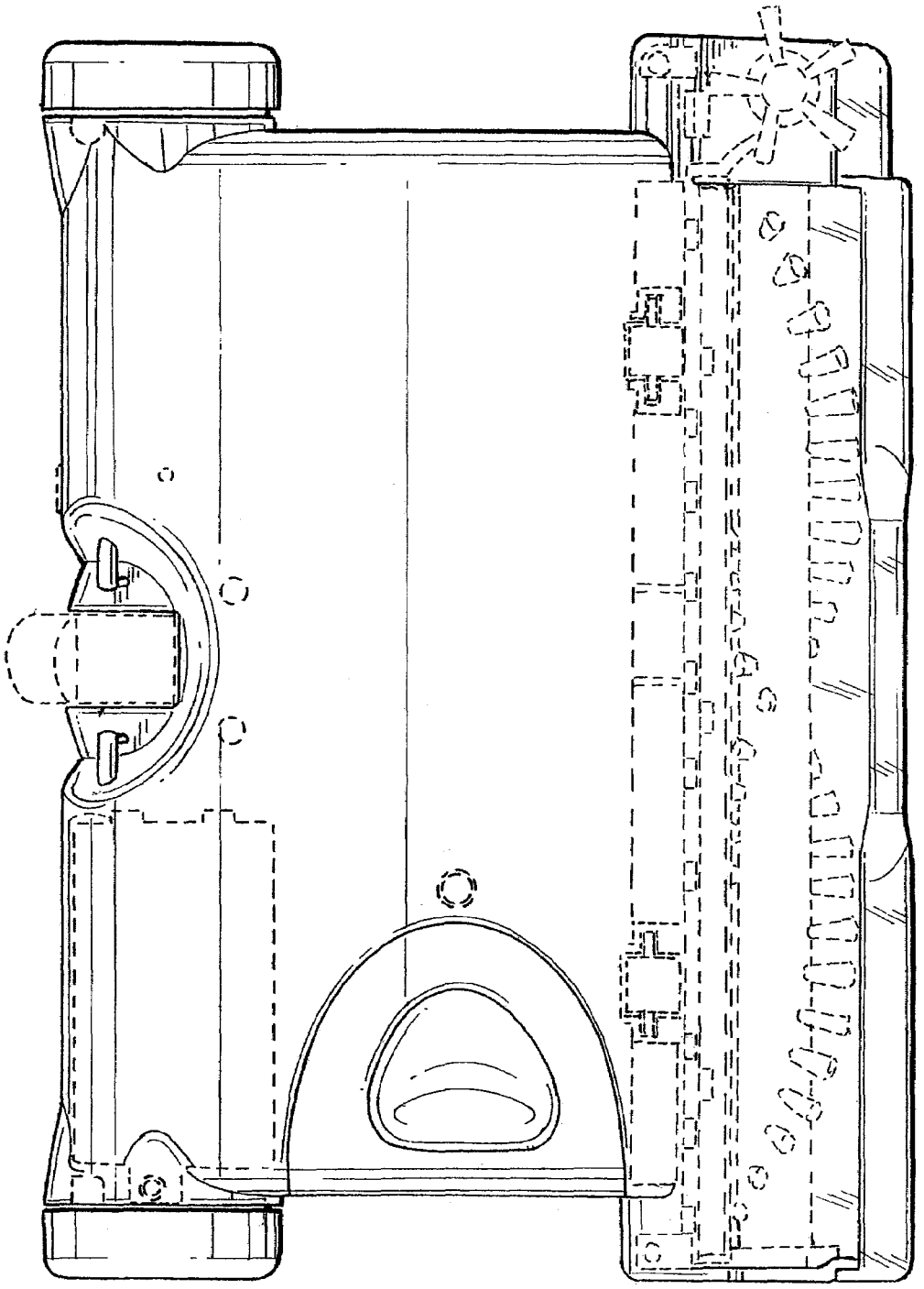

FIG. 8

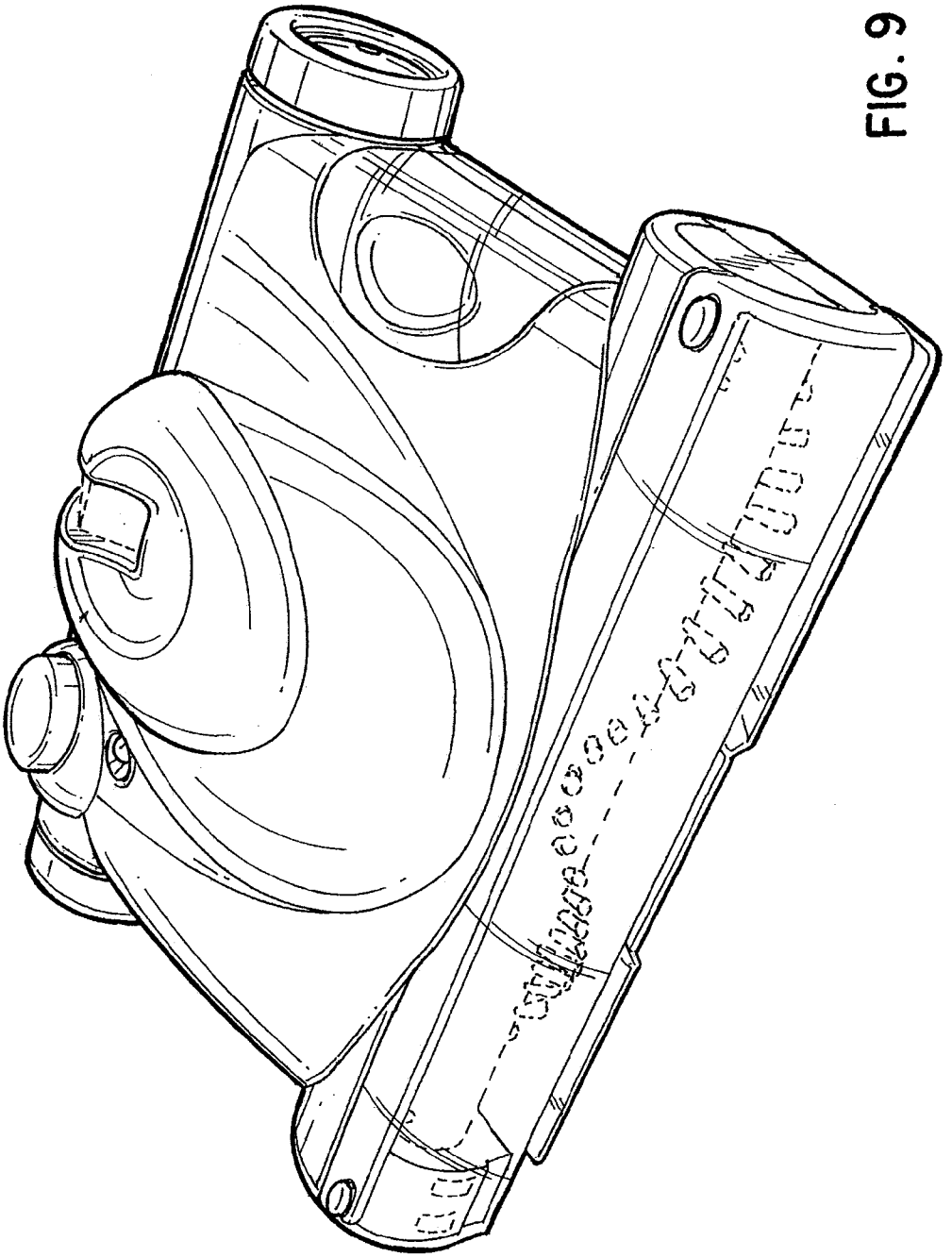

FIG. 9

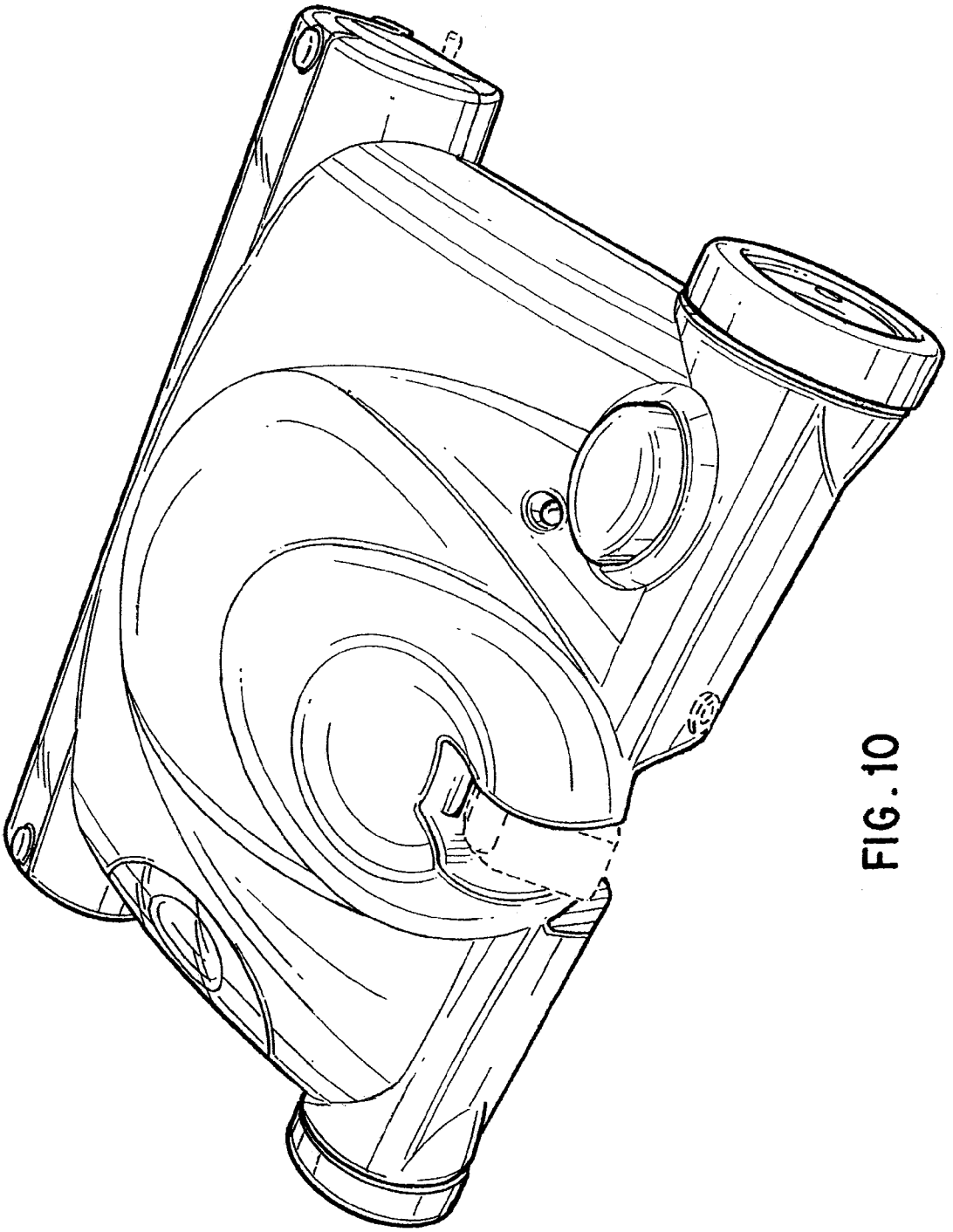

FIG. 10

FIG. 11

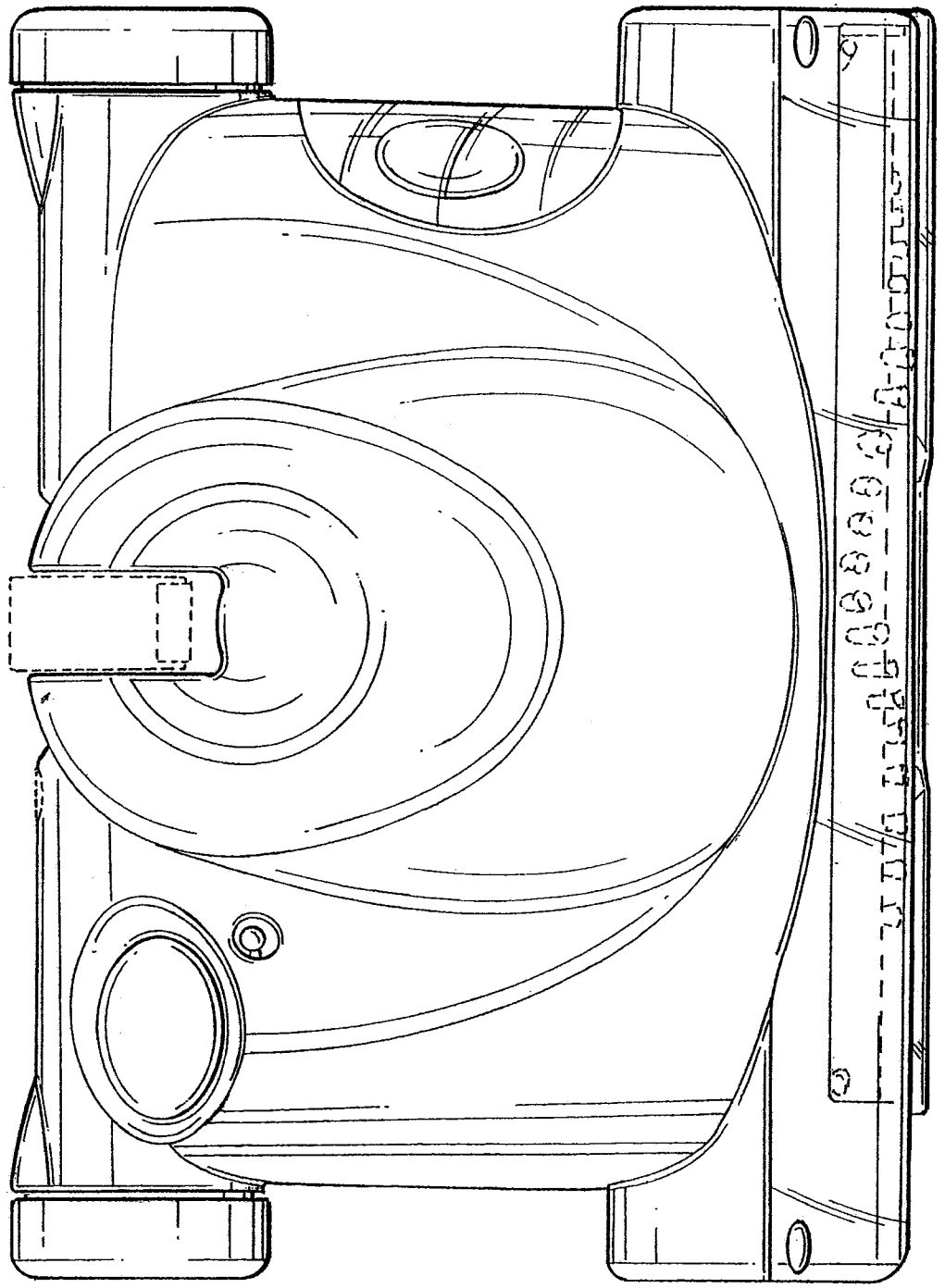

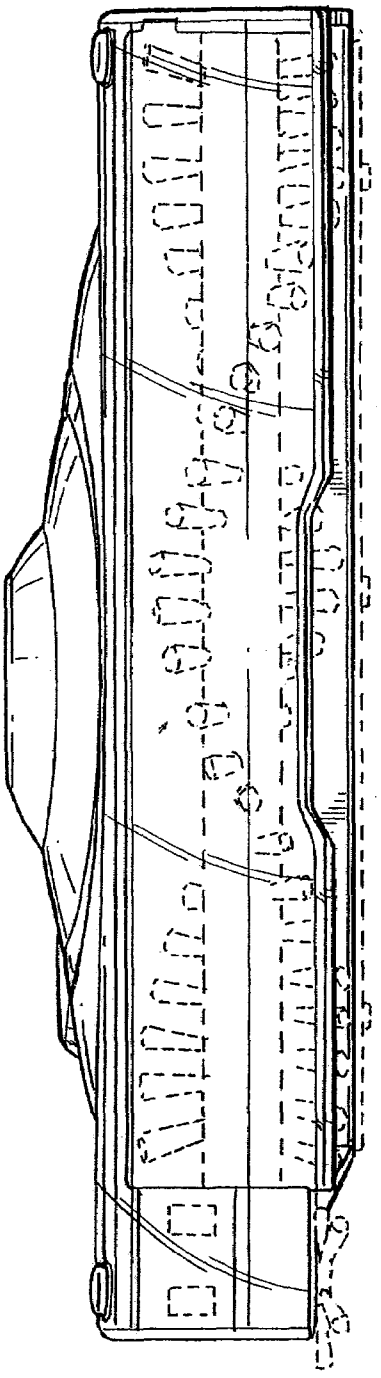

FIG. 12

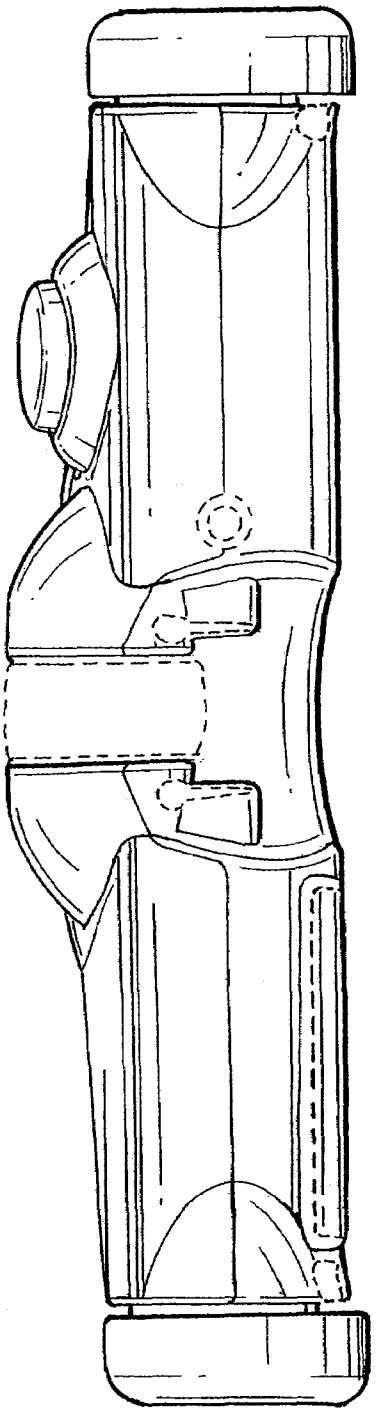

FIG. 13

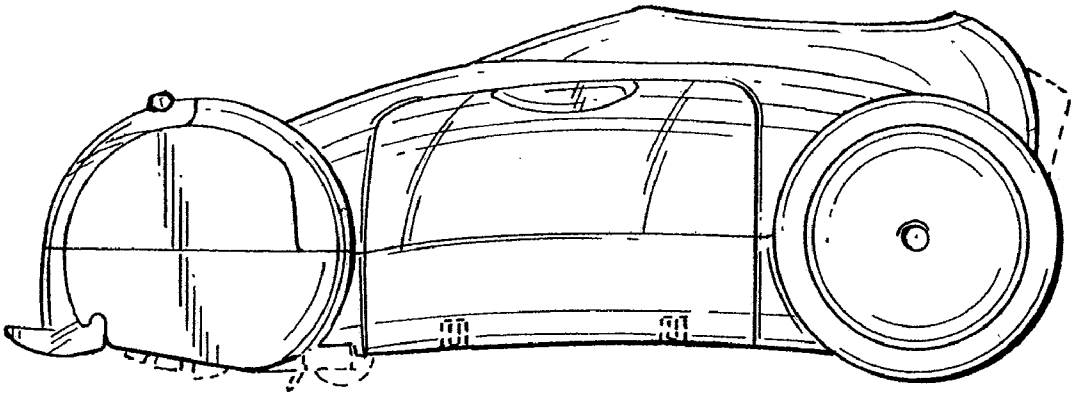

FIG. 14

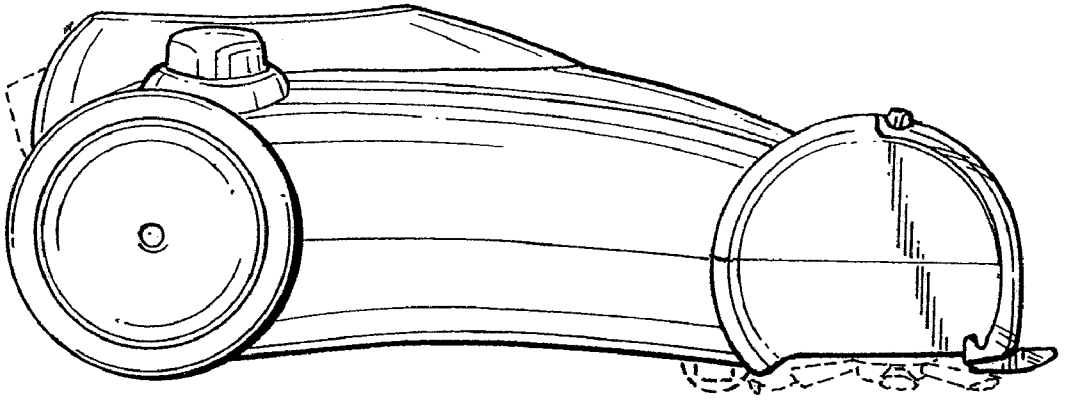

FIG. 15