July 6, 1965 T. WALTER 3,192,538

SWIMMING POOL

Filed May 9, 1963 4 Sheets-Sheet 1

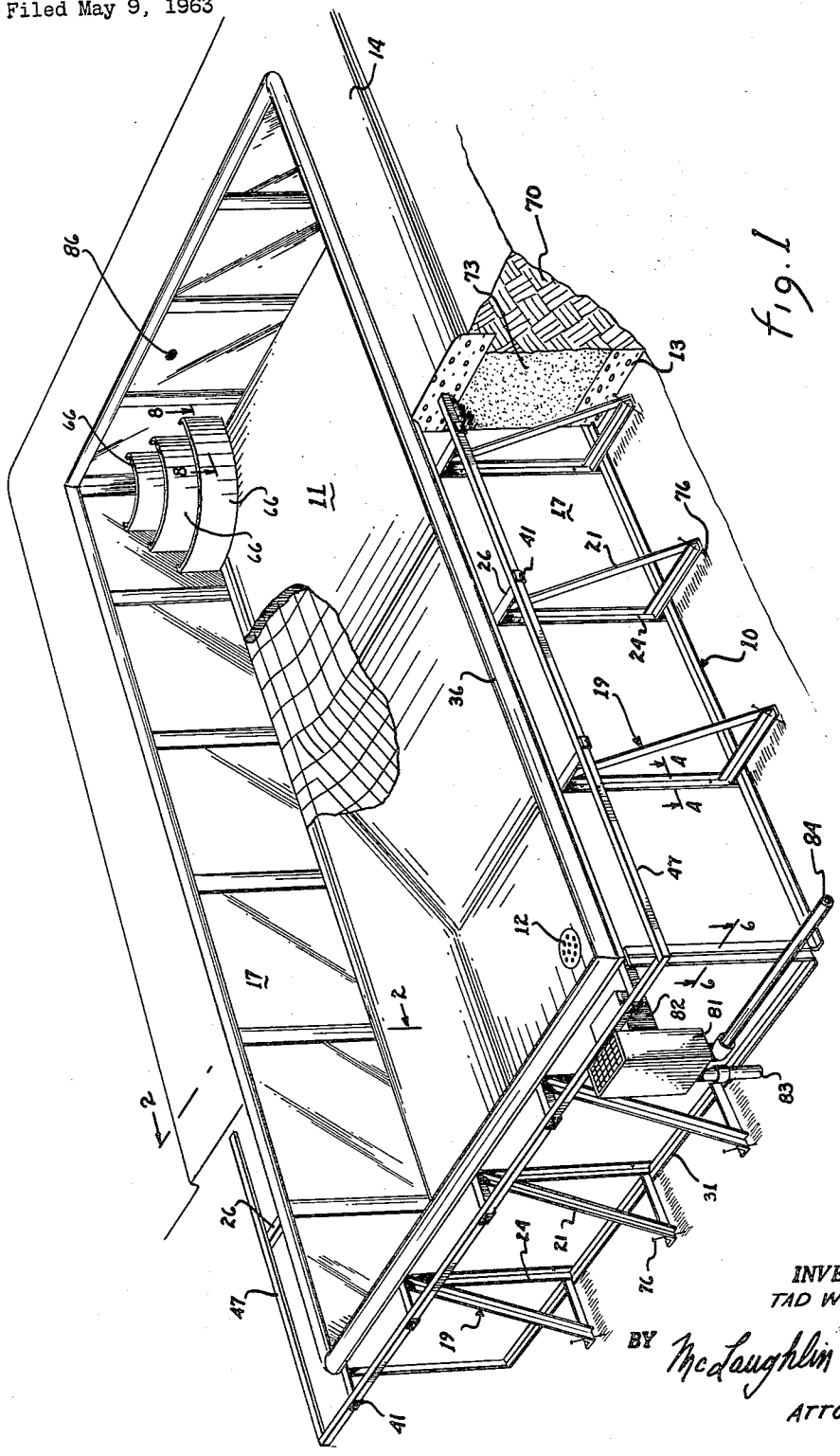

Fig. 1

July 6, 1965 T. WALTER 3,192,538

SWIMMING POOL

Filed May 9, 1963 4 Sheets-Sheet 2

Fig. 2

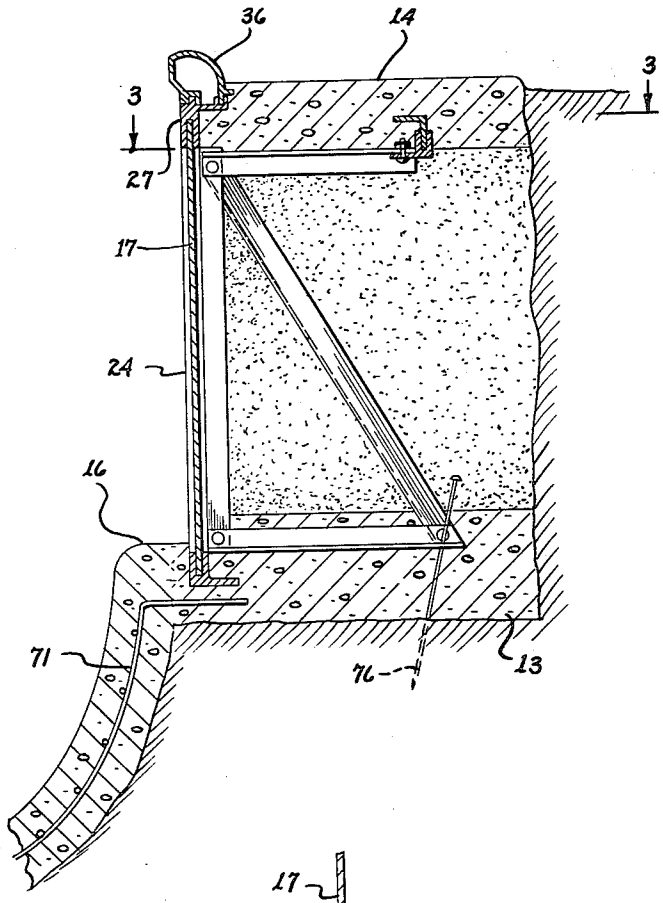

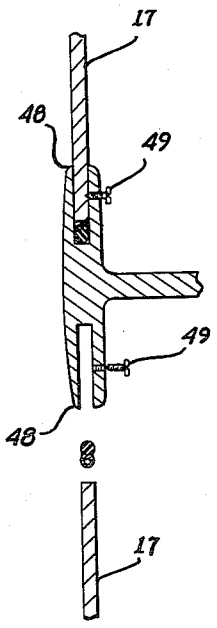

Fig. 4

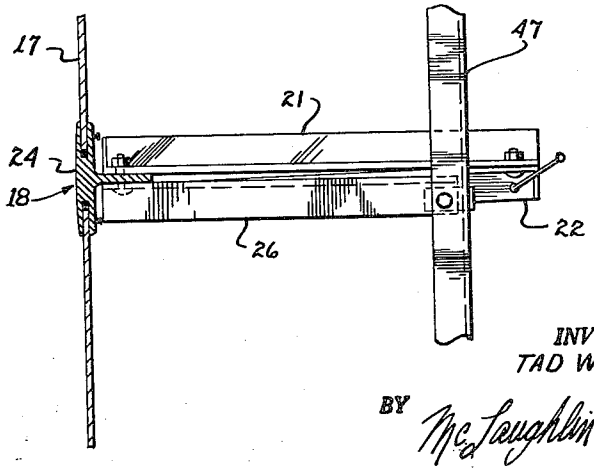

Fig. 3

INVENTOR.
TAD WALTER

BY McLaughlin & Cahill

ATTORNEYS

July 6, 1965 T. WALTER 3,192,538

SWIMMING POOL

Filed May 9, 1963 4 Sheets-Sheet 3

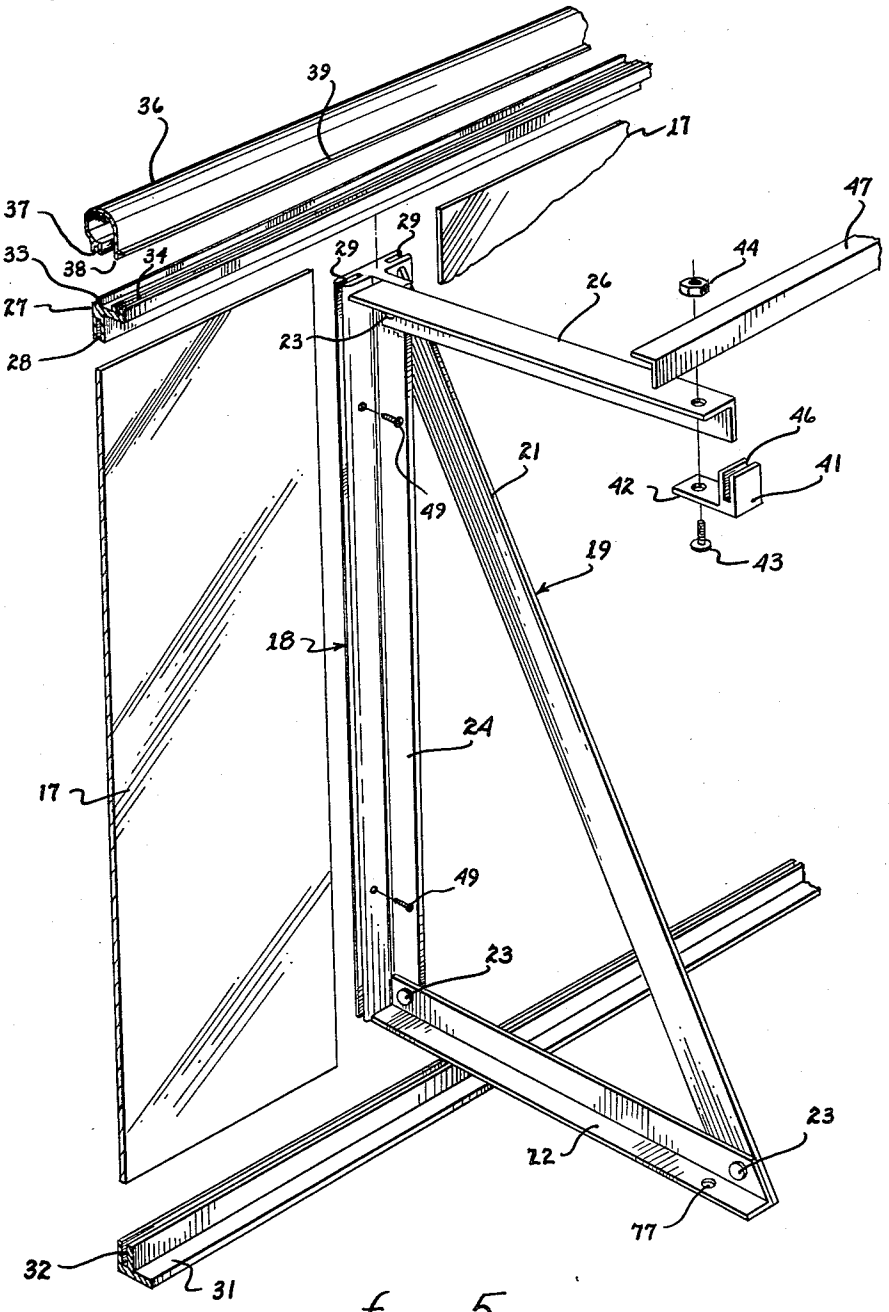

Fig. 5

INVENTOR.
TAD WALTER

BY McLaughlin & Cahill

ATTORNEYS

July 6, 1965 T. WALTER 3,192,538

SWIMMING POOL

Filed May 9, 1963 4 Sheets-Sheet 4

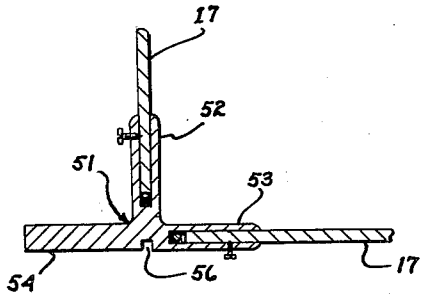

Fig. 6

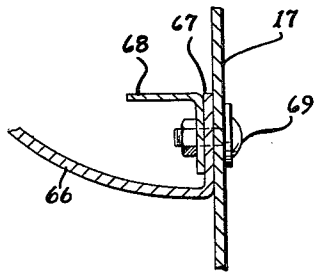

Fig. 8

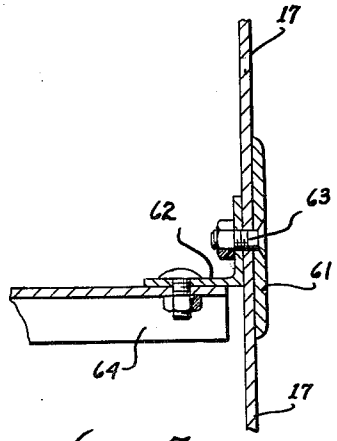

Fig. 7

INVENTOR.
TAD WALTER

BY McLaughlin & Cahill

ATTORNEYS

United States Patent Office

3,192,538
Patented July 6, 1965

3,192,538

SWIMMING POOL

Tad Walter, 2631 E. Prince Road, Tucson, Ariz.

Filed May 9, 1963, Ser. No. 279,175
4 Claims. (Cl. 4—172)

My invention relates in general to the production of swimming pools and is directed to an improved new structure and improved method for producing such structure.

Conventionally most swimming pools are formed of reinforced concrete utilizing temporary or permanent forms of some kind or another, or they may be made of concrete block or the like and a bottom of concrete then applied and in some manner or other bonded to the bottom course of concrete block. The concrete is commonly applied either by a so-called gunniting process or poured and troweled in that area not covered by the forms. Conventionally, also, the so-produced concrete pool is then coated in some way or other, more commonly with plaster, but frequently with a permanently applied or removable liner of plastic. Paints of various kinds have also been resorted to. All of such pools are not only expensive to produce, but they are also difficult and expensive to maintain.

Many attempts have been made to reduce the cost of swimming pools, particularly to reduce the initial and maintenance costs of relatively small private pools. It has been proposed to produce an entire pool of metal or partly of metal and partly of concrete, or the like. One such proposal utilizes a steel bottom and cast concrete sides. Regardless of the treatment given to the steel bottom, rapid deterioration occurs and leakage between the steel bottom and concrete sides readily occurs. Most coating applications applied to such pools are also difficult to maintain and require frequent replacement.

Attempts have also been made to make pools of other metals such as aluminum and weld the aluminum sheets together, theoretically, to produce a relatively small swimming pool which requires little or no maintenance. Anodising of the aluminum surface or partial oxidation of the surface theoretically prevents further oxygen attack of the metal and also produces a pool having such a finish and appearance as to be aesthetically acceptable without the application of an inner lining or coating of any kind. Such aluminum pools, while offering certain advantages from a theoretical standpoint, have not been satisfactory particularly in that it is difficult to weld and otherwise treat and fabricate aluminum parts under the conditions found in a swimming pool. There are still other reasons why such pools have not been satisfactory as those skilled in the art understand.

The principal object of the present invention is the provision of an improved swimming pool.

Another object is the provision of a swimming pool employing throughout a vertical wall portion pre-formed, including extruded aluminum parts, which provides a completely smooth upper pool interior.

Still another object is the provision of a swimming pool having a concrete bottom and concrete sloping sides and a single thickness, suitably supported aluminum plate forming an upper uniform side wall.

Other specific objects and features of the invention will be apparent from the following detailed description taken with the accompanying drawings, wherein:

FIG. 1 is a perspective view, partly broken away, showing a completed pool;

FIG. 2 is an enlarged fragmentary sectional view taken along the line 2—2 of FIG. 1;

FIG. 3 is a plan sectional view taken along the line 3—3 of FIG. 2;

FIG. 4 is a fragmentary enlarged sectional view taken along the line 4—4 of FIG. 1 and showing the manner in which the plates are secured together;

FIG. 5 is an enlarged fragmentary exploded view showing the various parts of the aluminum structure, including particularly the triangular gusset assembly for holding the plates in a vertical position;

FIG. 6 is a partly enlarged fragmentary sectional view taken on the line 6—6 of FIG. 1, showing the manner in which the plates are supported at the corners;

FIG. 7 is a fragmentary sectional view showing the construction for supporting the plates when larger-than-normal-size plates are used, and

FIG. 8 is a fragmentary sectional view taken on the line 8—8 of FIG. 1 and showing a step detail.

Referring now to the drawings, the pool of my present invention comprises a firm upper structure of substantially uniform pattern throughout, formed of aluminum and indicated generally by the reference character 10 in FIG. 1. It includes also a bottom of concrete indicated generally by the reference character 11 with the usual shallow end and deeper end providing a mid-point sump because of sloping walls indicated generally in FIG. 2 and a drain 12 leading to a circulating system (not shown in detail) placed at the lower-most part of the sump. The concrete includes a bottom of footing 13, a deck and a step 16 projecting slightly outwardly from the aluminum portion and overlapping the lowermost part of the aluminum frame a matter of some two to four inches.

The frame itself comprises a plurality of heavy-duty aluminum plates 17 preferably formed of 3003H14 aluminum alloy and suitably about 3/16 inch thick. These are held together by a T-shaped plate supporting extrusion 18 forming a part of a gusset-like support assembly 19. This assembly includes, in addition to the T-shaped plate supporting extrusion 18, a diagonal bar 21 and a longitudinal bottom bracing bar 22 comprising a 90° angle. The members 21 and 22 are secured by suitable rivets 23 to the upright flange portion 24 of the T-shaped extrusion and a third rivet 23 secures together the bottom longitudinal bracing bar 22 and the diagonal bracing bar 21. A top longitudinal bracing bar 26 is also secured to the flange portion 24 by the same rivet which attaches the diagonal bracing bar 21. The purpose and function of the longitudinal top bracing bar 26 will be made apparent shortly.

A rigid top runner 27 contains a bottom slot 28 into which the top edges of the plates 17 extend. The T-shaped extrusions 18 also have a pair of oppositely positioned slots 29 to receive side edges of the plates 17. A rigid bottom runner 31 in the general form of an angle has, also, an upper slot 32 into which the bottom edges of the plates 17 extend. When the plates have been assembled with the top and bottom rigid runners and with the T-shaped extrusions 18 forming a part of a gusset-like support assembly 19, the relationship of the parts is generally as shown in FIGS. 2 and 3. Provisions are made for a sealing which will be explained later. As shown particularly in FIGS. 2 and 5, the rigid top runner 27 has an upper projection 33 aligned with the bottom slot 28 in a vertical direction and a top slot 34 in an offset portion of the rigid top runner and extending in parallel relation to the top projection 33. A snap-on coping strip 36 has a bottom slot 37 (FIG. 5) into which the upper projection 33 of the rigid top runner 27 projects as appears clear in FIG. 2. The snap-on coping strip also has a continuous bottom projection 38 which projects into the top slot 34 of the rigid top runner and a horizontal projection 39 which can be seen with particular clarity in both FIGS. 2 and 5.

The longitudinal top bracing bars 26 carry special brackets 41 at their ends with a horizontal portion 42

secured to the end of the longitudinal top bracing bars 26 by means of a bolt 43 and nut 44. The portion of the bracket 41 extending above the longitudinal top bracing bar 26 is provided with a groove or slot 45 into which the horizontal portion of a continuous angle bar 47 extends.

The T-shaped extrusion 18 has its ends adjacent the grooves 29, as noted particularly at the point 48 in FIG. 4. This is the inside portion of the pool and, of course, it is not too important what the cross-sectional shape of the swimming pool may be so long as it is strong enough to furnish adequate support. A plurality of nuts 49 are provided which may fit in tightly against the plates 17 in an assembly to hold them firmly in position until the concrete has been poured in both the footing and deck portion.

At each of the corners a special T extrusion 51 is provided as shown in FIG. 6. Contiguous legs 52 and 53 at right angles to each other contain slots or grooves to accommodate the plates 17 which are at this point at right angles to each other. A third leg 54 is completely imperforate, but there is a shallow groove 56 on the outside aligned with the groove in the leg 52. Although this does not so appear in FIG. 1, the inclusion of top and bottom portions in the concrete is usually adequate to support the structure at the corners. It will be noted by reference to FIG. 1 that the outer supporting angle bar 47 at the side and at the ends of the pool join and as we will see, they are imbedded in the concrete of the deck 14. The rigid top runner 27 at sides of the pool also continues on and joins the bar 47. If desired, however, at the corners, a regular triangular gusset-like support assembly 19, or two of them, may be employed at the corners in the event such use would appear necessary for strengthening purposes.

In general I provide a length of about four feet for the plates 17, or even somewhat shorter, because such length is provided adequate structural support by means of the triangular gusset-like assembly 19 and the special extrusion 18. I may, however, provide somewhat longer sheets than would normally be adequately supported by the structure shown in FIGS. 2 and 5 in detail. I then provide between the triangular extrusions 18 a vertical reinforcing member 61 exhibiting the same general appearance within the pool as the extrusion 18. A vertical angle 62 is then secured to the plate 61 by nuts and bolts 63 which extend entirely through the plate 17 at a point mid-way between the extrusions 18. A diagonal member 64 may be used as a support generally equivalent to the diagonal member 21. I may also employ top and bottom longitudinal bracing bars for embedding in the deck and footing respectively.

One manner of providing steps in the pool is to use a plurality of slightly overlapping curved retainers 66 in the form of rolled sheet metal aluminum with supporting integral end pieces 67 secured against the contiguous portion of the plate 17 and reinforced in position by means of an angle iron 68 with the entire assembly secured together by means of nuts and bolts 69. Concrete or other suitable material may then be poured in back of the retainer 66 and provided with a suitable top finish forming steps for entering the pool.

When producing a pool in accordance with the present invention an excavation is made which is about two or three feet wider than the expected dimensions of the pool in the area of the aluminum frame, but approximately the normal shape and size within the frame. This means, then, that a kind of shelf will be formed in which the aluminum frame work is constructed. The framework is first put together following the general arrangement shown particularly in FIGS. 1 and 5. Wherever slots are provided, it is generally preferred that butyl rubber sealer be introduced into the slots before assembly. As shown particularly in FIG. 4, however, an additional flexible sealing gasket of double width and formed suitably of rubber or vinyl plastic, or any other sealing material which will resist oxidation, is introduced before the parts are actually assembled. After the parts of the metal frame have all been assembled, there will then be a space of two feet or somewhat more, if desired, between the back portion of the plates and the earth as represented by the reference character 70 in FIG. 1. The footing 13 is then poured preferably after reinforcing rods 71 (FIG. 2) extending upwardly from the sidewalls of the pool are bent over in sufficient number to tie the bottom portion of the pool to the footing 13. A filler 73 which will contain substantially no voids and which will continue to form a bent, packed layer is then introduced. This filler may be sand, finely crushed gravel or any other material providing substantially no voids, which will not settle, and which will provide a firm support for the plates 17 between the plates and ground 70. The deck 14 may then be poured in place and finished, although this may be left to a later operation if desired. It will be noted that the deck includes the brackets 41 and the supporting angle bar 47. It also partially includes the rigid runner 27, flange portion 24 and at least the side projection 39 of the snap-on coping strip 36.

When the frame has been suitably tied together, it frequently requires no further bracing. A plurality of long positioning spikes 76 are provided, and these are driven through holes 77 in the horizontal bracing bar 42 and into the ground to maintain the frame in fixed relation to the excavation.

The cement or concrete portion of the pool may be finished in accordance with usual customs, using the reinforcing rods 71. A step 16 is formed substantially entirely around the pool except at the shallowest end where the step and bottom form a continuation of each other. Normally, it is unnecessary to "gunnite" the bottom of the pool, nor is there any necessity for providing forms for the concrete side walls which must be continuous with the bottom surface of the pool. The bottom concrete surface may be treated in any usual way, such as by plastering, painting, tiling, the addition of a plastic liner, etc. The aluminum may be left untreated for a long period of time, but I have obtained very good results by coating the entire face with an epoxy paint applied entirely over the inside of the pool, including the aluminum portion and the concrete portion. Normally, two coats of polyurethane resin suitably applied will produce a coating that will last for several years.

The pool of the present invention is not only much more economical to install than pools of the prior art, but maintenance costs are very much reduced as contrasted with maintenance costs of comparable pools of the same general size. My pool may also be treated in any of the conventional ways to provide a continuous supply of safe water. For convenience of illustration, but not by way of limitation, I show a filter 81 receiving water, for example, from a weir 82 and from the drain 12 through a line 83. A return line 84 delivers the filtered water back to the pool. Any usual means for introducing a source of chlorine in solid or gaseous form may be used, and any other conventional accessories or maintenance processes may be used. In other words, the pool of my invention is conventional in the sense that it is subject to use of all conventional mechanisms and processes, such, for example, as maintaining suitable cleanliness, safe water conditions, preferred pH water control and the like.

I have described my invention in detail so that those skilled in the art may understand the manner of practicing the same, but the scope of the invention is defined by the claims.

I claim:

1. A swimming pool of the character described of rectangular shape, said swimming pool including

(a) a plurality of vertical T-shaped members having oppositely positioned grooves therein, four of such

T-shaped bars at corners having such grooves facing at right angles to each other,

(b) a plurality of flat plates disposed in the grooves of said T-shaped members, but projecting slightly above and below such members,

(c) a bottom generally right angular rigid runner having a top groove into which bottom edges of said plates project,

(d) a rigid top runner of generally angular shape having a continuous bottom groove into which top edges of said plates project,

(e) an upper projection on said rigid top runner aligned with said groove,

(f) means forming an upper groove spaced from said upper projection,

(g) a hollow rounded snap-on coping member having a bottom groove and bottom projection respectively engaging said rigid top runner,

(h) said coping also having a continuous outwardly facing narrow projection,

(i) a gusset-like triangular support assembly including

(1) a bottom horizontal bracing bar, and

(2) a diagonal bracing bar

(j) said rigid runner, T-shaped member, horizontal bracing bar and diagonal bracing bar all mutually interconnected to form a single assembly,

(k) a plurality of top horizontal bracing bars parallel with said bottom horizontal bracing bars,

(l) a longitudinal supporting angular bar in a nature of a runner secured to outer ends of said plurality of top horizontal bracing bars,

(m) a concrete footing engaging over said rigid runner and a portion of said plates and on the horizontal bracing bars and bottom end of said diagonal bracing bar, and

(n) a concrete or the like deck enclosing at least said longitudinal supporting angle bar and said outward projection on said snap-on coping, a body of comminuted materials substantially free of voids disposed between said plates and a portion of earth and between said footing and coping,

(o) a unitary body of concrete all mutually connected to said footing above identified and projecting slightly above said plates so as to overlap a bottom portion thereof, and comprising

(1) rounded side walls at a deeper portion of the pool,

(2) a bottom, and

(p) said concrete body having a relatively narrow projection forming a continuous safety step around the pool at side walls of said pool at said deeper portion said step being substantially coextensive with said pool bottom at the shallowest portion of the pool.

2. A swimming pool comprising

(a) a combination of aluminum parts, including flat plates forming a unitary top body having substantially vertically disposed walls,

(b) said aluminum parts also including a plurality of bracing frame portions securing said aluminum plates in substantially vertical straight alignment,

(c) said frame portions including

(1) T-shaped members having a pair of oppositely disposed, aligned grooves into which vertical edges of said flat sheets project, thereby to effect a vertical joint between said plates,

(2) runner means groovedly engaging top and bottom edges of said plates, thereby to maintain said top and bottom edges of said vertically joined plates in substantial alignment, and

(3) a horizontal bracing bar and a diagonal bracing bar joined to said T-shaped extrusion near the bottom and top thereof, respectively, and to each other at a point remote from said T-

shaped extrusion, thereby to form substantially a right triangle with said T-shaped extrusion, said triangle extending outwardly from said walls,

(d) a concrete footing engaging over said bottom runner means, a portion of said plates, said horizontal bracing bar and the bottom end of said diagonal bracing bar,

(e) said concrete footing coextensive with a unitary body of concrete projecting slightly above the bottom edge of said plates, said body comprising,

(1) rounded side walls at the deeper portion of the pool, and

(2) a bottom, and

(f) a concrete or the like deck outside the pool and engaging with said top runner means.

3. A swimming pool comprising

(a) a combination of aluminum parts, including flat plates forming a unitary top body having substantially vertically disposed walls,

(b) said aluminum parts also including a plurality of bracing frame portions securing said aluminum plates in substantially vertical straight alignment,

(c) said frame portions including

(1) T-shaped members having a pair of oppositely disposed, aligned grooves into which vertical edges of said flat sheets project, thereby to effect a vertical joint between said plates,

(2) T-shaped corner members having such grooves facing at substantially right angles to each other,

(3) runner means groovedly engaging top and bottom edges of said plates, thereby to maintain said top and bottom edges of said vertically joined plates in substantial alignment,

(4) a horizontal bracing bar and a diagonal bracing bar joined to said T-shaped extrusion near the bottom and top thereof, respectively, and to each other at a point remote from said T-shaped extrusion, thereby to form substantially a right triangle with said T-shaped member, said triangle extending outwardly from said walls,

(5) a longitudinal top bracing bar extending substantially horizontally outwardly from said wall and connected with said diagonal bracing bar and said T-shaped member near the junction thereof,

(6) a horizontal angle bar connected to said top bracing bar near the end of said top bracing bar remote from said wall, said angle bar extending substantially parallel to said wall,

(d) a concrete footing engaging over said bottom runner means, a portion of said plates, said horizontal bracing bar and bottom end of said diagonal bracing bar,

(e) said concrete footing coextensive with a unitary body of concrete projecting slightly above the bottom edge of said plates, said body comprising

(1) rounded side walls at the deeper portion of the pool, and

(2) a bottom, and

(f) a concrete or the like deck outside the pool and engaging with said top runner means, said top bracing bar and said angle bar.

4. A swimming pool comprising

(a) a combination of aluminum parts, including flat plates forming a unitary top body having substantially vertically disposed walls,

(b) said aluminum parts also including a plurality of bracing frame portions securing said aluminum plates in substantially vertical straight alignment,

(c) said frame portions including

(1) T-shaped members having a pair of oppositely disposed, aligned grooves into which vertical

edges of said flat sheets project, thereby to effect a vertical joint between said plates,

(2) T-shaped corner members having such grooves facing at substantially right angles to each other,

(3) runner means groovedly engaging top and bottom edges of said plates, thereby to maintain said top and bottom edges of said vertically joined plates in substantial alignment, said top edge-engaging runner means having an upper projection aligned with the edge-engaging groove therein and means forming an upper groove spaced from said upper projection,

(4) a horizontal bracing bar and a diagonal bracing bar joined to said T-shaped extrusion near the bottom and top thereof, respectively, and to each other at a point remote from said T-shaped extrusion, thereby to form substantially a right triangle with said T-shaped member, said triangle extending outwardly from said walls,

(5) a longitudinal top bracing bar extending substantially horizontally outwardly from said wall and connected with said diagonal bracing bar and said T-shaped member near the junction thereof,

(6) a horizontal angle bar connected to said top bracing bar near the end of said top bracing bar remote from said wall, said angle bar extending substantially parallel to said wall,

(7) a hollow rounded snap-on coping member having a bottom groove and bottom projection

respectively engaging said top runner means, said coping also having a continuous outwardly facing narrow projection,

(d) a concrete footing engaging over said bottom runner means, a portion of said plates, said horizontal bracing bar and bottom end of said diagonal bracing bar,

(e) said concrete footing coextensive with a unitary body of concrete projecting slightly above the bottom edge of said plates, said body comprising

(1) rounded side walls at the deeper portion of the pool, and

(2) a bottom, and

(f) a concrete or the like deck outside the pool and engaging with said top runner means, said outward projection on said snap-on coping, said top bracing bar and said angle bar.

References Cited by the Examiner

UNITED STATES PATENTS

2,018,920	10/35	Mette	61—39
2,140,978	12/38	Beeby	50—153
2,869,140	1/59	Weidemann	4—172 XR
2,888,818	6/59	Leuthesser	4—172 XR
3,016,546	1/62	Lerner	4—172
3,069,695	12/62	Hegerfeld	4—172

FOREIGN PATENTS

223,363	9/62	Austria.

LEWIS J. LENNY, *Primary Examiner.*