Oct. 24, 1944. R. F. FOSTER 2,361,187

HIGH FREQUENCY TRANSFORMER ARRANGEMENT

Filed April 9, 1943

Fig. 1.

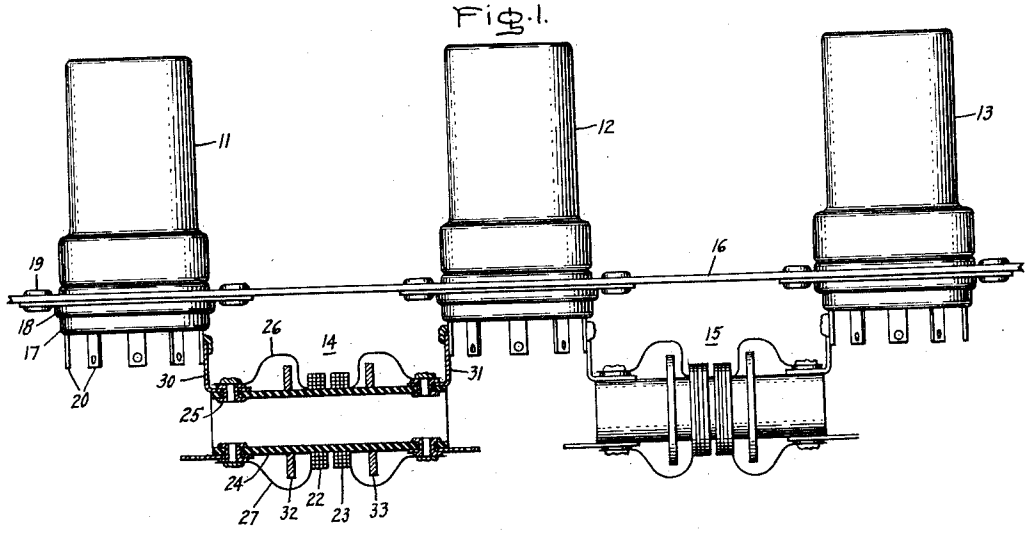

Fig. 2.

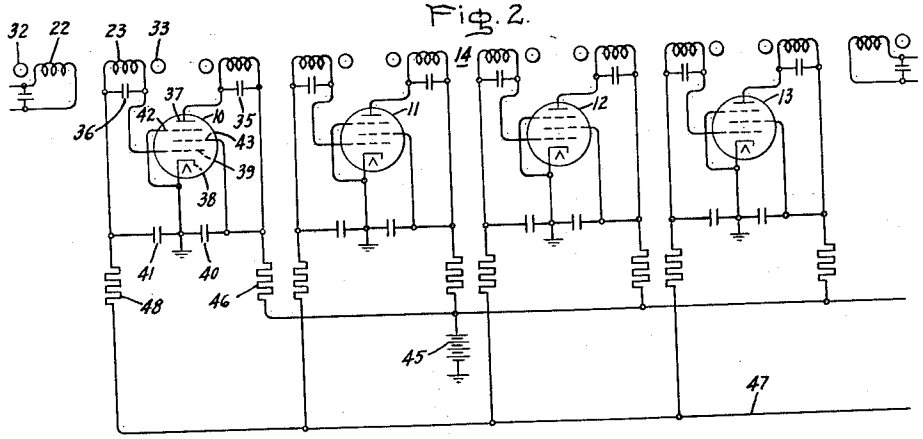

Fig. 3.

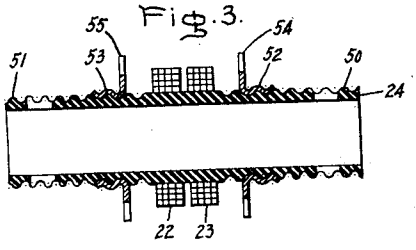

Fig. 4.

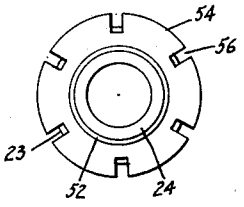

Fig. 5.

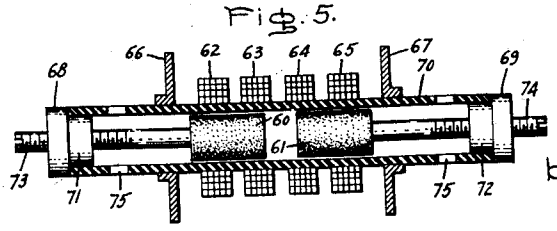

Inventor:
Raymond F. Foster,
by Harry E. Dunham
His Attorney.

Patented Oct. 24, 1944

2,361,187

UNITED STATES PATENT OFFICE

2,361,187

HIGH FREQUENCY TRANSFORMER ARRANGEMENT

Raymond F. Foster, Stratford, Conn., assignor to General Electric Company, a corporation of New York

Application April 9, 1943, Serial No. 482,501

5 Claims. (Cl. 179—171)

My invention relates to amplifiers and in particular to wide band amplifiers such as are used in the video circuits of television receivers. It is an object of my invention to provide an improved transformer arrangement for use in such amplifiers.

A further object of my invention is to provide an improved tuning arrangement for high frequency transformers.

Another object of my invention is to provide an improved shielding arrangement for disposition between the coils of successive transformers in a plurality of coaxially aligned high frequency transformers.

Still another object of my invention is to provide an improved high frequency transformer arrangement which is readily constructed from inexpensive and available materials and which is easily assembled and adjusted to provide a desired tuning condition.

The features of my invention which I believe to be novel are set forth with particularity in the appended claims. My invention itself, however, both as to its organization and method of operation, together with further objects and advantages thereof, may best be understood by reference to the following description taken in connection with the accompanying drawing, in which Fig. 1 illustrates certain portions of a receiver embodying my invention; Fig. 2 is a diagram of certain portions of the receiver circuit embodying the transformers illustrated in Fig. 1; Fig. 3 is a modification of the transformer arrangement shown in Fig. 1; Fig. 4 is an end view of the transformer arrangement shown in Fig. 3; and Fig. 5 illustrates another modification of the invention.

In Fig. 1 the electron discharge devices 11, 12, 13 may be employed in successive stages of a radio receiver. The device 11 is coupled to the device 12 by means of the transformer arrangement 14 and device 12 is coupled to device 13 by means of transformer arrangement 15. The electron discharge devices 11—13 are supported from a metal chassis 16 by means of tube sockets 17 and the metal supporting rings 18 secured to the chassis 16 by means of rivets 19. Extending below the sockets 17 is the usual plurality of contacts 20.

The transformer arrangements 14 and 15 comprise a primary coil 22 and a secondary coil 23 magnetically coupled therewith. The coils 22 and 23 are supported in spaced coaxial relation to each other on a tubular coil form 24 of insulating material. A plurality of contact studs 25, in the form of tubular rivets, are secured to the opposite ends of tubular insulator 24. The ends of coils 22 and 23 are electrically connected by suitable leads 26, 27 to the rivets 25 by soldering, or any other desirable means. The transformer assembly is supported directly from the contacts 20 of the tube sockets 17 by the substantially rigid leads 30, 31 soldered to one of the contacts 20 of each of the sockets and secured to coil form 24 by the rivets 25. Preferably, the contacts 20 of the sockets are arranged so that lead 30 is connected to the plate, or anode, contact of discharge device 11 and lead 31, to the control electrode, or grid, contact of electron discharge device 12. In this manner the transformer arrangement takes advantage of the 180° spacing which occurs between the external grid and plate electrodes of a single-ended electron discharge device, i. e., the type of electron discharge device in which all of the electrodes extend directly from the base of the device. By this arrangement, also, the axis of the tubular insulator 24 intersects the vertical axes of the devices 11 and 12 at right angles and the plurality of transformers 14 and 15 may be substantially coaxially aligned.

In order to provide means for adjusting the self-inductance of the windings 22 and 23 without varying substantially the mutual inductance of this pair of windings, as well as to provide means to isolate magnetically the windings of one transformer from those of another, a pair of metallic rings 32 and 33 is provided on each of the coil forms 24 and each of the rings 32, 33 is located opposite the outer face of a respective one of the pair of windings 22, 23. Thus, the ring 32 is supported by the insulator 24 opposite the outer face of coil 22 and ring 33 is located opposite the outer face of coil 23. The rings 32 and 33 preferably are formed of a non-ferrous material, such as aluminum, and the position of these rings upon the tubular insulator 24 is adjustable so that they may be brought closer to the coils 22 and 23 or moved farther away in order to tune the same. In this manner, each of the rings functions as a short-circuited conductive winding and operates to change the inductance of its associated coil without varying substantially the mutual coupling of the pair of coils. Moreover, this change in the self-inductance of the coils is accomplished with very slight change in the Q or quality of the associated coil. For example, when the rings are formed of aluminum, the inductance of the associated coil may be varied as much as 50% with very slight

change in the quality of that coil. A change of 25% may be obtained by sliding the ring from a position approximately ⅜ inch away from the coil to a position ½ inch away. With this amount of variation in spacing, no decrease in the quality of the coil is noticed.

The rings 32 and 33 function additionally to provide a very good electromagnetic shield for the windings of the transformers 14 and 15 so that substantially no flux lines are present at the ends of the coil form 24, which flux, if present at the end of the coil form 24 at the end of transformer 15, for example, would thread the windings of transformer 14 to cause feedback of energy from the higher to the lower stages of the amplifier.

In mounting the coils 22 and 23 on the insulator 24 and connecting the leads 26 and 27 to associated circuits, the leads 26 connected to the inner layers of the coils are joined preferably to those portions of the receiver circuits which operate at potentials varying from ground potential, such as the anode and control electrode circuits, while the leads 27 connected to the outer layers of the coils 22 and 23 are joined to the portions of the circuits which operate at ground potential. In this manner, the outsides of the windings 22 and 23 are relatively at ground potential to the high frequency radio currents which thread these coils and feedback between different portions of the receiver circuits is kept to a minimum.

In Fig. 2, I have shown the portions of a receiver circuit which may represent, for example, the intermediate frequency amplifier circuits of a superheterodyne receiver. In the figures corresponding reference numbers have been used to designate corresponding parts. The electron discharge devices 10, 11, 12, 13 may comprise successive stages of the intermediate frequency circuit. The winding 22 in the input circuit of device 10 may be connected to preceding portions of the receiver circuit, such as the radio frequency amplifiers and a first detector, and the winding 23 in the output circuit of device 13 may be connected to a second detector circuit and supply currents to the output circuits of the receiver. The windings 22, 23 are tuned broadly to desired operating frequencies by means of capacitances 35, 36. Final adjustment of the tuning of these circuits is effected by means of the tuning rings 32, 33.

The devices 10—13 have been shown as pentodes having an anode 37 connected to one terminal of coil 22 of the transformer, a cathode 38 connected to ground through capacitor 40 to the opposite terminal of coil 22 and through capacitor 41 to one terminal of coil 23. The opposite terminal of coil 23 is connected to the control electrode 39 of the associated device. The grids 42 of the devices may be connected directly to the cathodes to act as the usual suppressor grids. The screen grid 43 of each of the devices is connected to the cathode and ground through capacitor 44. Operating potential for the anodes and screen electrodes of the devices may be supplied from any suitable source, such as the battery 45 through decoupling resistors 46. Automatic volume control potentials may be supplied over a conductor 47 to the input circuits of the respective stages through grid bias resistances 48.

In the transformer arrangement shown in Fig. 3, the coil form 24 is shown as having threaded portions 50 and 51 on its opposite ends to cooperate respectively with threaded flanges 52 and 53 on the metallic rings 54 and 55. In this arrangement of the transformer, the self-inductance of the windings 22, 23 carried on the form 24 is adjusted by advancing the non-ferrous metallic rings 54 and 55 along the threads 50 and 51.

In Fig. 4 there is shown an end view of the transformer arrangement of Fig. 3. This view illustrates the slots 56 cut in rings 54 and 55 to facilitate advancing the rings along the threads on the supporting insulator by the use of any suitable tool, such as a screw driver.

In the transformer arrangement shown in Fig. 5, a pair of powdered iron tuning cores or slugs 60, 61 are provided for primary adjustment of the inductance of the windings 62, 63, 64, and 65 and the rings 66, 67 function as means to provide a secondary adjustment of the tuning of coils 62 and 65. A pair of closure members 68 and 69 are provided for the end of the tubular insulating support 70 and have shouldered portions 71, 72 which abut against the ends of insulator 70. Screws 73, 74, embedded at one end in the tuning cores 60, 61, have threads which cooperate with threads in the closure members 68, 69 and function as means for adjusting the positions of tuning slugs 60, 61 within the coil form. The insulator 70 is provided with a plurality of openings 75 for the reception of suitable connecting means, such as the rivets 25 shown in Fig. 1.

By way of illustration only and not in any sense by way of limitation, the following representative values are given for an intermediate frequency amplifier constructed in accordance with the circuit of Fig. 2. In this amplifier, Type 6SK7 tubes were used for the devices 10—13, a 4700-ohm resistor was used for the resistance 46 and a 100,000-ohm resistor for the resistance 48. Using a 100-volt supply 45 for the anodes and screen electrodes of the devices and operating at 12.75 megacycles with a 2.75 megacycle band width, a gain of 6 to 7 per stage was obtained. With such an amplifier and with no shielding around or between the coils other than the tuning rings 32, 33 described previously, the amplifier is much more stable and provides better cooling for the coils 22, 23 than intermediate frequency amplifiers previously used and employing more costly transformer coils mounted in shield cans or casings. The stability of the amplifier was such that the screen and suppressor electrodes, or even the anode, could be touched to the control electrode without any effect other than detuning action.

While I have described the rings 32 and 33 as being made of aluminum, any other non-ferrous material, such as copper or brass, may be used. In the embodiment shown in Fig. 3, the familiar type of hexagonal brass nut may be employed with good results. After the rings have been set to a desired tuning position, a small amount of quick drying cement may be applied at the joint between the inner circumference of the rings and the insulating form 24 to hold the rings permanently in place. It is apparent, therefore, that my improved high frequency transformer arrangement is readily constructed from inexpensive and available materials and may be easily assembled and adjusted to provide a desired tuning condition.

While I have shown a particular embodiment of my invention, it will of course be understood that I do not wish to be limited thereto since various modifications may be made, and I contemplate by the appended claims to cover any

such modifications as fall within the true spirit and scope of my invention.

What I claim as new and desire to secure by Letters Patent of the United States is:

1. In a high frequency transformer, a primary coil and a secondary coil coupled magnetically therewith, dielectric means supporting said coils in spaced coaxial relation to each other, and a pair of metallic rings supported by said dielectric means in spaced coaxial relation with said coils, each of said rings being located opposite the outer face of a respective one of said coils and being movable along the axis of said coils to vary the self-inductance of its respective coil without altering substantially the mutual inductance of said coils.

2. In a high frequency transformer, a primary coil and a secondary coil coupled magnetically therewith, dielectric means supporting said coils in spaced coaxial relation to each other, and a pair of metallic rings supported by said dielectric means in spaced coaxial relation with said coils, each of said rings being located opposite the outer face of a respective one of said coils, and means whereby each of said rings may be advanced along the axis of said coils to vary the self-inductance of its respective coil without altering substantially the mutual inductance of said coils.

3. In an amplifier having a plurality of stages, the combination of, a plurality of substantially coaxially aligned transformers, each of said transformers comprising a pair of magnetically coupled windings connected respectively to successive ones of said stages, means supporting said windings in spaced coaxial relation to each other, and means to isolate magnetically the windings of different ones of said transformers to prevent feedback between said stages and to vary the self-inductance of individual windings of a respective transformer without varying substantially the mutual coupling of the pair of windings of said respective transformer.

4. In an amplifier having a plurality of stages, the combination of, a plurality of substantially coaxially aligned transformers, each of said transformers comprising a pair of magnetically coupled windings connected respectively to successive ones of said stages, means supporting said windings in spaced coaxial relation to each other, and means to isolate magnetically the windings of different ones of said transformers to prevent feed back between said stages and to vary the self-inductance of individual windings of a respective transformer without varying substantially the mutual coupling of the pair of windings of said respective transformer, said last means comprising a pair of metallic rings on said supporting means in spaced coaxial relation with said pair of windings, each of said rings being located opposite the outer face of a respective one of said pair of windings and being adjustable with respect to said outer face.

5. In a high frequency transformer, a primary coil and a secondary coil coupled magnetically therewith, dielectric means supporting said coils in spaced coaxial relation to each other, and a pair of metallic rings supported by said dielectric means in spaced coaxial relation with said coils, each of said rings being located opposite the outer face of a respective one of said coils, and means whereby each of said rings may be advanced along the axis of said coils to vary the self-inductance of its respective coil without altering substantially the mutual inductance of said coils comprising cooperating threads on said dielectric means and said rings.

RAYMOND F. FOSTER.