Office de la Propriété Intellectuelle du Canada
Un organisme d'Industrie Canada

Canadian Intellectual Property Office
An agency of Industry Canada

CA 2881140 A1 2015/08/25

(21) 2 881 140

(12) DEMANDE DE BREVET CANADIEN
CANADIAN PATENT APPLICATION

(13) A1

(22) **Date de dépôt/Filing Date:** 2015/02/04

(41) **Mise à la disp. pub./Open to Public Insp.:** 2015/08/25

(30) **Priorité/Priority:** 2014/02/25 (US14/189,252)

(51) **Cl.Int./Int.Cl.** ***G01S 13/04*** (2006.01), ***B60N 2/44*** (2006.01), ***B60R 21/015*** (2006.01), ***B64D 11/06*** (2006.01), ***B64D 47/00*** (2006.01), ***G01S 15/04*** (2006.01)

(71) **Demandeur/Applicant:**
ASTRONICS ADVANCED ELECTRONIC SYSTEMS CORP., US

(72) **Inventeurs/Inventors:**
JOUPER, JEFFREY A., US;
PEABODY, MARK, US

(74) **Agent:** FASKEN MARTINEAU DUMOULIN LLP

(54) **Titre : APPAREIL ET METHODE DE SURVEILLANCE DE L'OCCUPATION DES SIEGES**
(54) **Title: APPARATUS AND METHOD TO MONITOR THE OCCUPANCY OF SEATING**

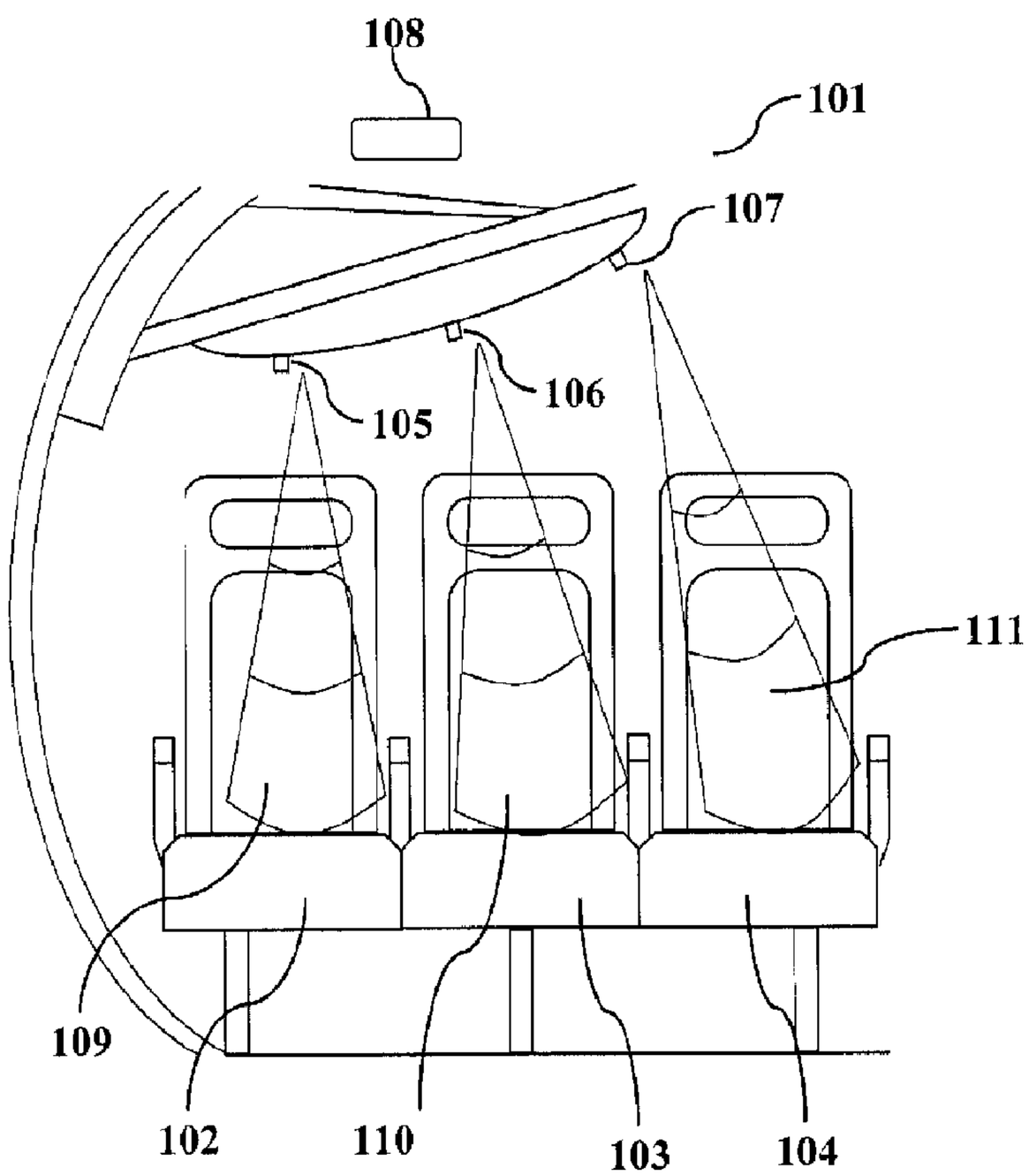

(57) **Abrégé/Abstract:**
Disclosed is a system and method for monitoring the occupancy of seating. Sensors (105; 306; 513) provide measurements to a control circuit (108; 302; 506) that determines an occupancy state for each seat. Information regarding the occupancy of the seats can be presented on a display (309; 402; 505). In some instances, additional inputs can be used to adjust the occupancy determinations to account for environmental factors. Also, the occupancy states of the seats can be cross-checked with a passenger manifest to facilitate the boarding of a vehicle containing the seating.

ABSTRACT

Apparatus and Method to Monitor the Occupancy of Seating

Disclosed is a system and method for monitoring the occupancy of seating. Sensors (105; 306; 513) provide measurements to a control circuit (108; 302; 506) that determines an occupancy state for each seat. Information regarding the occupancy of the seats can be presented on a display (309; 402; 505). In some instances, additional inputs can be used to adjust the occupancy determinations to account for environmental factors. Also, the occupancy states of the seats can be cross-checked with a passenger manifest to facilitate the boarding of a vehicle containing the seating.

Apparatus and Method to Monitor the Occupancy of Seating

FIELD OF THE DISCLOSURE

[0001] The subject matter of the present disclosure generally relates to the monitoring of seating, and more particularly relates to the monitoring of the occupancy of passenger seats using electronic sensors.

BACKGROUND OF THE DISCLOSURE

[0002] The boarding of passenger vehicles can be a relatively chaotic and slow process, especially when it must be accomplished simultaneously with the stowage of passenger luggage.

[0003] In commercial aircraft, passengers must proceed down a narrow aisle or aisles, attempting to locate their assigned seat and also sufficient stowage space for their personal luggage. The flight crew must traverse the same aisles to assist passengers in their boarding and to ensure that all baggage is properly secured. Often, this includes perusing the passenger manifest to ensure that individuals are not in seats that should be empty and confirming that luggage is not placed on empty seats, where it can pose a hazard during take-off. These circumstances can, in turn, lead to flight delays and wasted energy from operating the aircraft on the tarmac.

[0005] The subject matter of the present disclosure is directed to overcoming, or at least reducing the effects of, one or more of the problems set forth above.

BRIEF SUMMARY OF THE DISCLOSURE

[0006] Disclosed is a system and method to monitor the occupancy of seating. In an embodiment, the occupancy of passenger seats on a commercial aircraft is monitored using ultrasonic sensors. The ultrasonic sensors measure the distance between each sensor and the nearest surface in a direction of interest. A control circuit utilizes these measurements in determining an occupancy state for each passenger seat. Additional inputs may be optionally

used to adjust for changes in temperature or altitude. The system and method are adaptable for use with a wide variety of passenger seating configurations, including the retrofitting of previously existing vessels, because the empty state of the seats is used as a baseline against which the utilization of the seats is evaluated.

[0007] The disclosed subject matter presents several advantages in the realm of passenger aircraft. Flight attendant workload is reduced by the ability to centrally monitor available seating and quickly identify seats that may have loose luggage or passengers that are supposed to be seated elsewhere. Thus, flight crew members do not need to traverse the aisles of the aircraft as frequently, expediting the completion of the boarding process, alleviating flight delays, reducing costs, and increasing passenger satisfaction.

BRIEF DESCRIPTION OF THE DRAWINGS

[0008] The foregoing summary, preferred embodiments, and other aspects of the present disclosure will be best understood with reference to a detailed description of specific embodiments, which follows, when read in conjunction with the accompanying drawings, in which:

[0009] Figure 1A is an illustration of a front view of an embodiment having a plurality of ultrasonic sensors.

[0010] Figure 1 B is an illustration of the embodiment of Figure 1A with the echolocation signals of the ultrasonic sensors visualized.

[0011] Figure 2 is flowchart diagram of an embodiment.

[0012] Figure 3 is a schematic drawing of the electronic components of an embodiment.

[0013] Figure 4 is illustration of the display of an embodiment.

[0014] Figure 5 is an overhead schematic drawing of an embodiment monitoring passenger seats in a commercial aircraft.

[0015] Like reference numbers and designations in the various drawings indicate like elements.

DETAILED DESCRIPTION

[0016] Disclosed is a system and method for monitoring the utilization of seating.

[0017] Figure 1A is a front view illustration of a first embodiment of a system **101**. Seats **102**, **103**, and **104** are passenger seats in a commercial aircraft. Sensors **105**, **106**, and **107** are each associated with one of seats **102**, **103**, and **104**, respectively. Optionally, sensors **105**, **106** and **107** can be built into or attached to an overhead stowage bin. Sensors **105**, **106** and **107** are configured to communicate with control circuit **108**. Control circuit **108** is configured to determine the occupancy state of seats **102**, **103**, and **104** using input from their associated sensors **105**, **106** and **107**.

[0018] Control circuit **108** communicates with a display (not pictured) that is configured to present occupancy information regarding the occupancy states of seats **102**, **103**, and **104**. Optionally, the display can be a centralized display, for instance it may be located in the flight attendant area of the passenger aircraft. The display can present a manifest report that is formed by cross-checking a passenger manifest with the occupancy states of seats **102**, **103**, and **104**.

[0019] As illustrated in Figure 1B, in the embodiment sensors **105**, **106** and **107** are echolocation sensors emitting echolocation signals **109**, **110** and **111**. Echolocation signals **109**, **110** and **111** will strike the nearest surface in a direction of interest and produce a return signal to the sensor that emitted the signal. If a passenger or object is in a particular seat, the echolocation signal from the sensor associated with that seat will produce a return signal in a

lesser amount of time than if the seat were empty. By measuring the difference between when the propagation signal is originated and when the return signal is received, and comparing this differential to a pre-existing setting representing an empty condition, the occupancy state of a seat can be determined.

[**0020**] In certain embodiments, control circuit **108** can receive a measured temperature input and/or a measured altitude input. These inputs can allow control circuit **108** to properly adjust the measurements of sensors **105**, **106** and **107** based on environmental factors and thus adjust the determination of the occupancy states of seats **102**, **103** and **104**. For instance, ultrasonic sensors will be affected by changes in propagation time associated with changing temperature and altitude.

[**0021**] The disposition of seats may be classified into various occupancy states. A simple combination could consist of "empty" and "occupied." Other combinations are possible, some depending on the sensors' accuracy. For example, if the sensor detects that there is a surface three inches closer to the sensor than an empty seat, the seat is unlikely to be occupied by a human but may have luggage improperly placed on it. Thus, a "probable luggage" occupancy state could indicate to a flight attendant, for example, that that seat should be checked so that any baggage can be properly stored.

[**0022**] The display may take many various forms and make use of various technologies. For example the display may utilize a liquid crystal display (LCD) or light emitting diode (LED). Various sizes may also be employed, for instance there may be a small local LCD display next to each of a set of seats and a larger central LED display in a centralized area.

[**0023**] Communication among elements of embodiments may be accomplished by a variety of widely available technologies, including both wired and wireless interfaces such as radio frequencies, Wi-Fi, etc.

[0024] Various sensor types are suitable for use with the disclosed and other embodiments, including ultrasonic, infrared, LED, photo, and laser sensors. Generally, any device that can accurately range short distance measurements is suitable for use as a sensor in keeping with the present disclosure. Such sensors may vary widely in number and orientation, and may be employed in combination with one another. For instance, an ultrasonic sensor may be paired with an infrared sensor in order for the system to be better able to distinguish between luggage placed on a seat and a small child. The operation of such sensors is described generally so as not to obscure the subject matter to which the present disclosure is directed, as such sensors are well known and documented.

[0025] Figure 2 is a flowchart diagram of a process embodiment. In initial step **201**, a seat with an associated sensor, and a control circuit in communication with the sensor are provided. In step **202**, the sensor is used to measure the distance between the sensor and the seat it is associated with, when the seat is empty. This measurement is used as a baseline against which future determinations as to the occupancy state of the seat can be made. In step **203**, the current distance between the sensor and the nearest surface in the sensor's direction of interest is measured. In step **204**, the occupancy state of the seat is determined. In an embodiment, the measurement of the distance to the nearest object from step **203** is compared to the baseline measurement of the distance to the seat from step **202**. If the measured distance to the nearest object is less than the baseline measurement, the occupancy state of the seat is not empty. Depending on the measured distance, the occupancy state could indicate that either a passenger or luggage is likely to be present in the seat. The control circuit receives a temperature and altitude input. These inputs can be utilized during the determination of the occupancy state to adjust measurements from the sensors to account for environmental conditions. For example, the signal propagation speed of the sensors may vary due to altitude or temperature. In step **205**, the occupancy state of the seat is cross-checked against a passenger manifest. In step **206**, occupancy information regarding the occupancy state of the seat is presented on the display. If any discrepancies between the passenger manifest and the occupancy state of the seat were identified in step **205**, an alert regarding such a discrepancy is presented in step **206**. For instance, if a seat is supposed to be empty according to the

passenger manifest but is, in fact, occupied, a flight crew member can be alerted that the seat should be checked for loose luggage or an errantly seated passenger.

[**0026**] In step **207**, if the system is still in operation the process returns to step **203**, so that the occupancy state of the seat is continually monitored. If the system is not still in operation, the process is concluded in step **208**.

[**0027**] By measuring the distance between the sensor and the seat when the seat is known to be empty, a baseline can be easily established. Thus, the system can be easily configured to operate with any number of seat types and configurations.

[**0028**] Figure 3 is an electrical schematic of an embodiment **301**. Control circuit **302** contains micro-controller **303**, transmit multiplex **304** and receive multiplex **305**. Transmit transducers **306**, **307**, **308** are each associated with a respective seat (not pictured), and are connected to transmit multiplex **304** and receive multiplex **305**. Microcontroller **303** is configured to output to display **309**. In the embodiment, display **309** has first seat indicator **310**, second seat indicator **311** and third seat indicator **312**, that correspond to the seats associated with transducers **306**, **307** and **308**. Microcontroller **303** can output information to display **309**, particularly information regarding the occupancy state of the seats. In the embodiment, microcontroller **303** also receives a temperature and altitude input.

[**0029**] Microcontroller **303** provides sensor selection, transmit and receive functions as well as occupancy state determinations. In operation, microcontroller **303** selects a first transmit transducer, in this case transmit transducer **306**, through transmit multiplexer **304** and sends a pulse train to transducer **306** using a transmit signal. This pulse train creates a high frequency signal. Preferably, such a signal is above the audible range, such as approximately 40 KHz. In the embodiment, at sea level and nominal temperature, the propagation time of the signal is approximately 1100 ft/second for a 40 KHz signal. The pulse travels through the air and is reflected either by the seat or by an object or person in the seat. The reflected pulse train is received by transducer **306** and a receive signal is communicated to microcontroller

303 through the receiver multiplexer **305**. With the temperature and altitude inputs, micro-controller **303** can adjust its determination of seat occupancy states to account for differences in sensor operation caused by changes in altitude or temperature.

[**0030**] In the embodiment, display indicator **310** indicates that the occupancy state of the seat associated with transducer **306** is unoccupied, or empty. Conversely, display indicator **311** indicates that the occupancy state of the seat associated with transducer **307** is occupied. Display indicator **312** indicates that the seat associated with transducer **308** is occupied but should not be occupied according to a cross-check with a passenger manifest.

[**0031**] Figure 4 illustrates a display of an embodiment that is centrally located in the flight attendant area of a passenger aircraft. Electronic device **401** has display **402**. Presented on display **402** is information regarding the occupancy states of a set of passenger seats. In the embodiment, empty seats **403** are displayed without shading and occupied seats **404** are displayed with shading. Alert **405** indicates to the flight crew that the cross check of the passenger manifest with the occupancy states of the passenger seats indicated that a passenger or luggage was present in a seat that should be empty. The flight crew can then go to that seat to either move the errant passenger or stow any stray luggage that may be occupying the seat. Optionally, seats that the manifest shows should be occupied that are empty may be marked for flight attendants so that additional stand-by passengers may be seated. Various methods, symbols, colors, text and numerals may optionally be used to relay the occupancy states of the passenger seats.

[**0032**] Figure 5 is a schematic top view of an embodiment. Within enclosure **501**, in this case the passenger area of a commercial aircraft, there is a plurality of passenger seats **502**. There are sensors **503**, with at least one sensor associated with each passenger seat. Each sensor measures the distance between it and the nearest surface in a direction of interest. Control circuits **504** together receive a distance measurement from each sensor and determine an occupancy state for each of passenger seats **502**. Display **505** receives from control circuits **504** the occupancy states of each of the passenger seats and displays occupancy information

to the user. Display **505** is centralized in a flight attendant area, so that the flight crew can monitor the boarding process without needing to traverse the aisle.

[**0033**] In the embodiment, control circuit **506** has associated with it particular passenger seats **507**, **508**, **509**, **510**, **511** and **512**, each associated with a respective sensor, in this case **513**, **514**, **515**, **516**, **517** and **518**. It should be noted that any number of sensors could be paired with any appropriate number of control circuits, and control circuits may communicate with one another or directly with a display.

CLAIMS:

1. A seating monitoring system, comprising:

at least one sensor (105; 306; 513) associated with at least one seat (102; 507);

the sensors (105; 306; 513) configured to communicate with at least one control circuit (108; 302; 506); and

wherein the control circuit (108; 302; 506) is configured to determine the occupancy states of the seats (102; 507) using input from the associated sensors (105; 306; 513).

2. The system of claim 1, wherein:

the control circuits (108; 302; 506) are configured to communicate with a display (309; 402; 505); and

the display (309; 402; 505) is configured to present an amount of occupancy information regarding the occupancy states of the seats (102; 507).

3. The system of claim 2, wherein the at least one seat (102; 507) is a plurality of seats, each having associated with it a single sensor (105; 306; 513).

4. The system of claim 2, wherein the display (309; 402; 505) is a centralized display (505).

5. The system of claim 2, wherein the at least one seat (102; 507) is a plurality of passenger seats on a commercial aircraft (102; 507).

6. The system of claim 5, wherein the presented occupancy information includes a manifest report formed from cross-checking a passenger manifest with the occupancy state of each of the passenger seats.

7. The system of claim 1, wherein the control circuits (108; 302; 506) are further configured to adjust the determination of the occupancy states according to at least one of a measured temperature input and a measured altitude input.

8. The system of claim 1 wherein a type of the sensors (105; 306; 513) is selected from the group consisting of ultrasonic, infrared, photo, LED, and laser.

9. A system for monitoring the occupancy of a passenger enclosure, comprising:

a plurality of passenger seats (102; 507), each having associated with it at least one sensor (105; 306; 513);

each sensor (105; 306; 513) configured to measure a distance between the particular sensor and the nearest surface in a direction of interest;

at least one control circuit (108; 302; 506), together configured to receive from each sensor (105; 306; 513) a distance measurement and determine an occupancy state for each of the passenger seats;

a display (309; 402; 505), configured to receive from the control circuits (108; 302; 506) the occupancy state of each of the passenger seats and present an amount of occupancy information.

10. The system of claim 9 wherein a type of the sensors (105; 306; 513) is selected from the group consisting of ultrasonic, infrared, photo, LED, and laser.

11. The system of claim 10, wherein the passenger seats are passenger seats on a commercial aircraft.

12. The system of claim 11, wherein the display (309; 402; 505) is a centralized display (505).

13. The system of claim 11, wherein the presented occupancy information includes a manifest report formed from cross-checking a passenger manifest with the occupancy state of each of the passenger seats.

14. The system of claim 13, wherein the manifest report includes an amount of alert information regarding any passenger seats that are supposed to be empty according to the passenger manifest but have an occupancy state other than empty.

15. The system of claim 10, wherein the control circuits are further configured to adjust the determination of the occupancy state of each of the passenger seats according to at least one of a measured temperature input and a measured altitude input.

16. A method of monitoring the occupancy of at least one seat, comprising the steps of:

providing at least one seat (102; 507), each having at least one associated sensor (105; 306; 513);

providing at least one control circuit (108; 302; 506);

measuring using the sensors (105; 306; 513) the distance between each sensor (105; 306; 513) and each associated seat (102; 507) when the seats are empty;

measuring using the sensors (105; 306; 513) the present distance between each sensor (105; 306; 513) and each associated seat (102; 507);

determining using the control circuits (108; 302; 506) an occupancy state for each seat (102; 507); and

presenting on a display (309; 402; 505) an amount of occupancy information regarding the occupancy states of the seats.

17. The method of claim 16, wherein the display (309; 402; 505) is a centralized display (505).

18. The method of claim 16, wherein the at least one seat is a plurality of passenger seats on a commercial aircraft.

19. The method of claim 18, further comprising the steps of:

forming a manifest report by cross-checking a passenger manifest with the occupancy state of each of the passenger seats; and

presenting the manifest report on the display (309; 402; 505).

20. The method of claim 16, wherein during the step of determining the occupancy state for each seat, adjusting the determination according to at least one of a measured temperature input and a measured altitude input.

21. The system of claim 16 wherein a type of the sensors (105; 306; 513) is selected from the group consisting of ultrasonic, infrared, photo, LED, and laser.

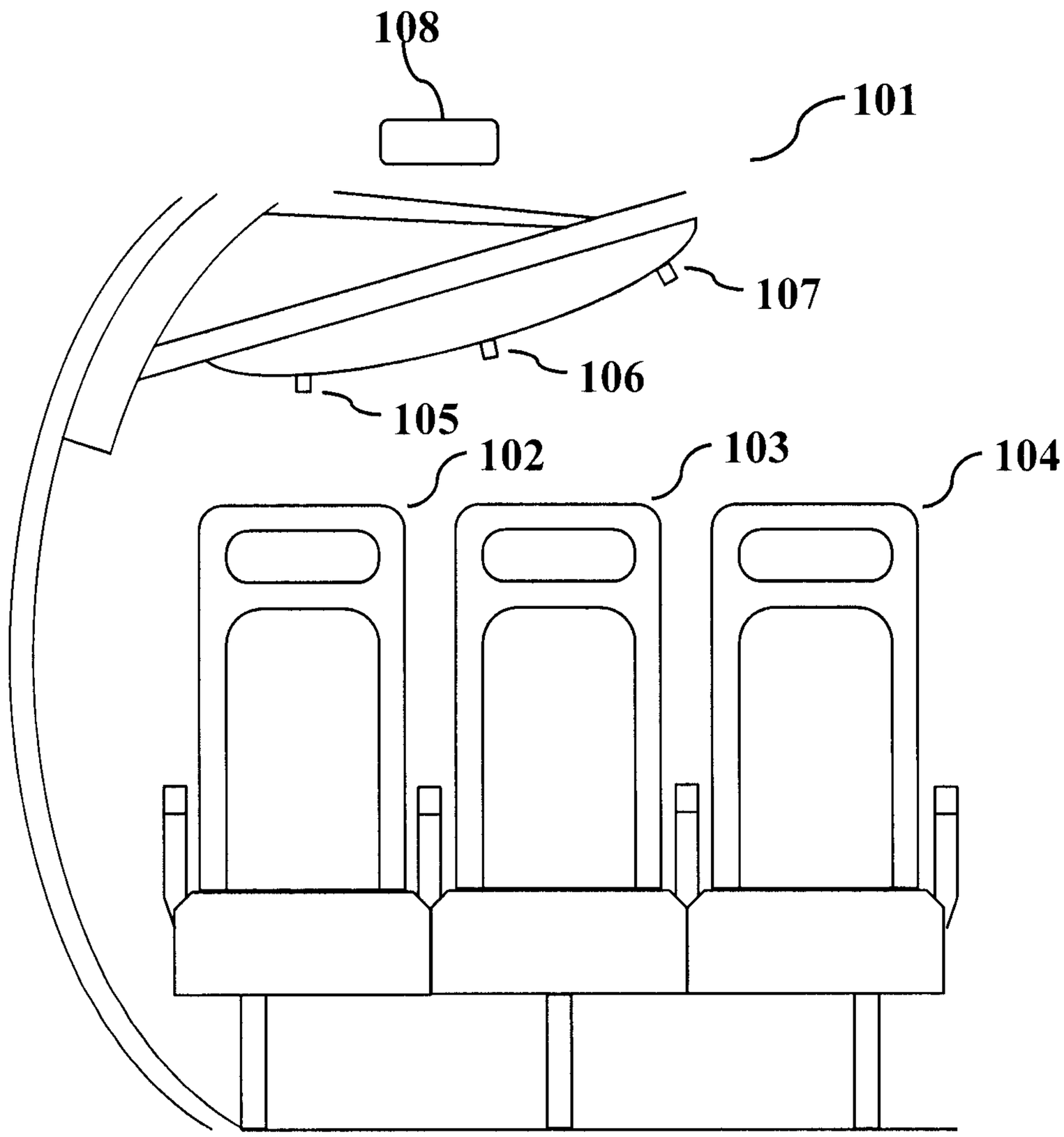

FIG. 1A

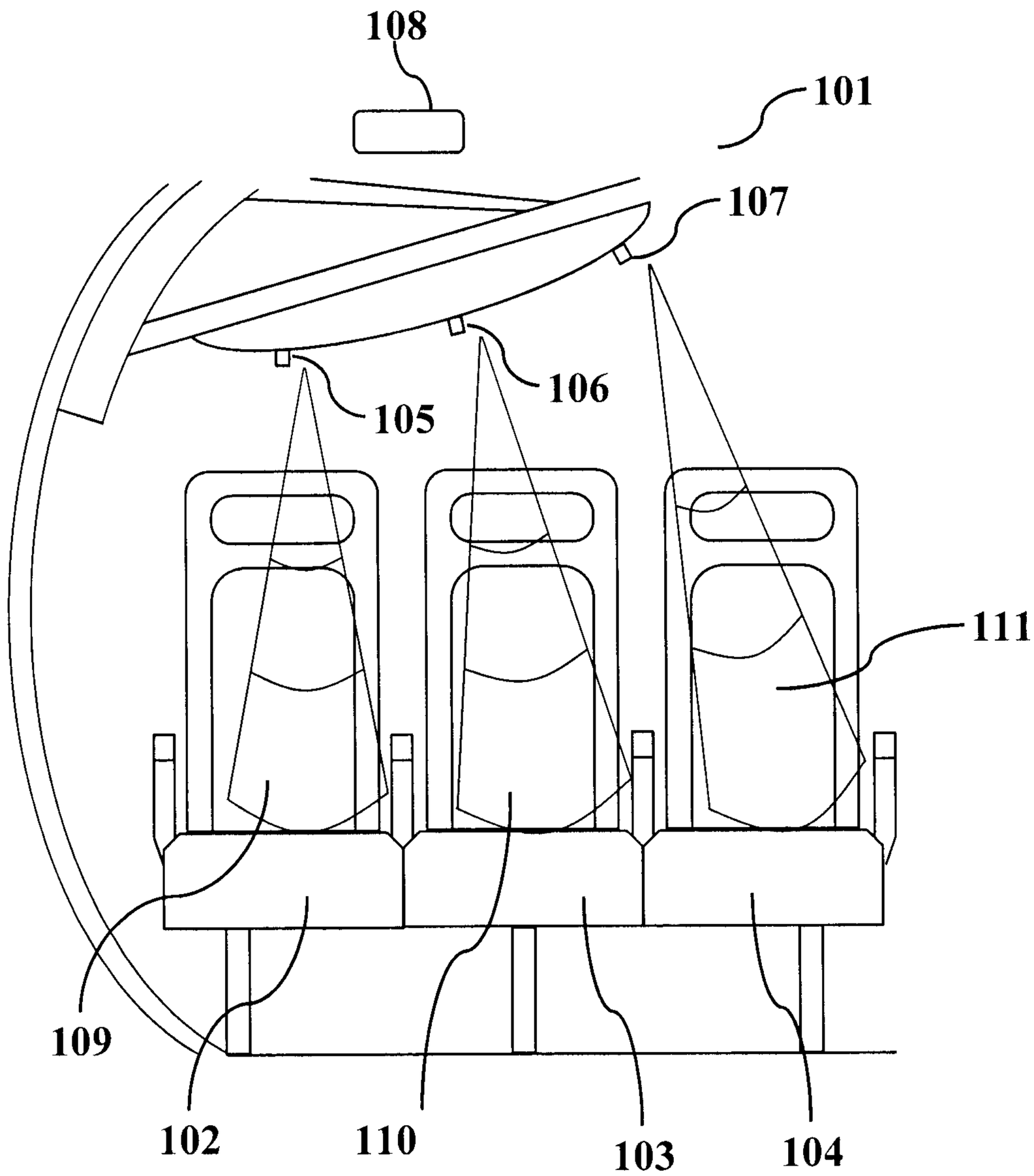

FIG. 1B

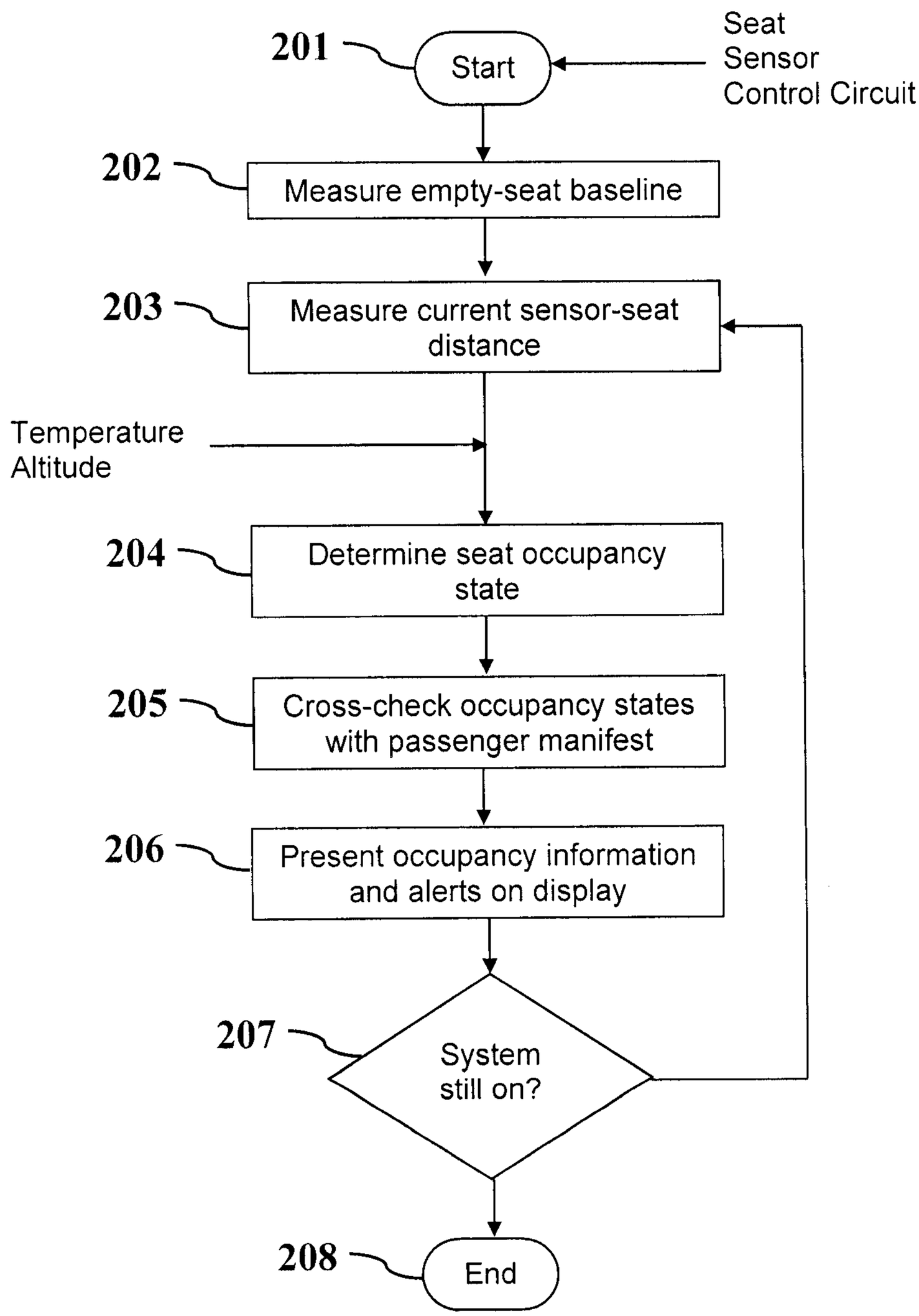
201
Start
Seat
Sensor
Control Circuit
202
Measure empty-seat baseline
203
Measure current sensor-seat distance
Temperature
Altitude
204
Determine seat occupancy state
205
Cross-check occupancy states with passenger manifest
206
Present occupancy information and alerts on display
207
System still on?
208
End

FIG. 2

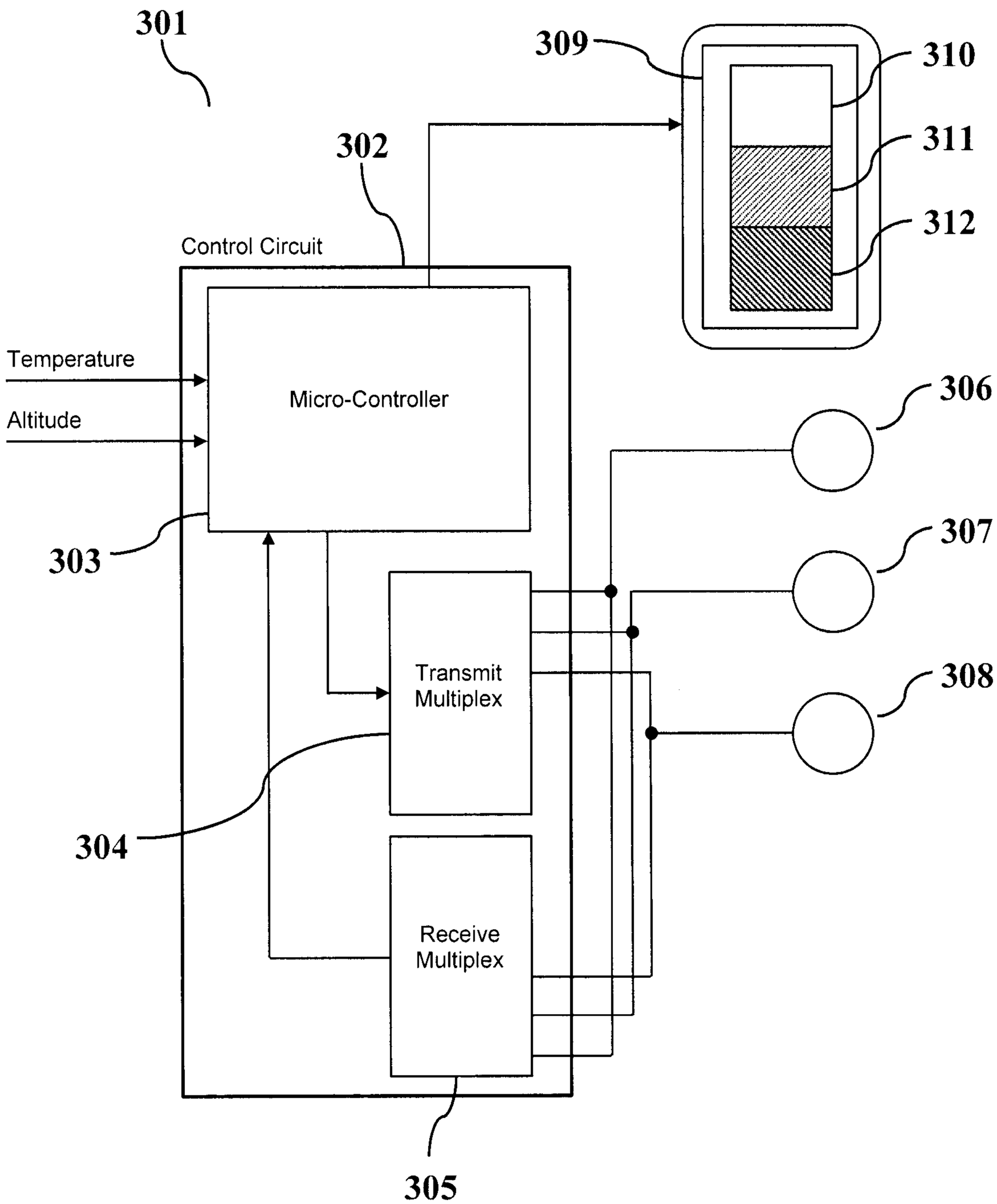
301
309
310
311
312
302
Control Circuit
Temperature
Altitude
Micro-Controller
306
303
307
Transmit
Multiplex
308
304
Receive
Multiplex
305

FIG. 3

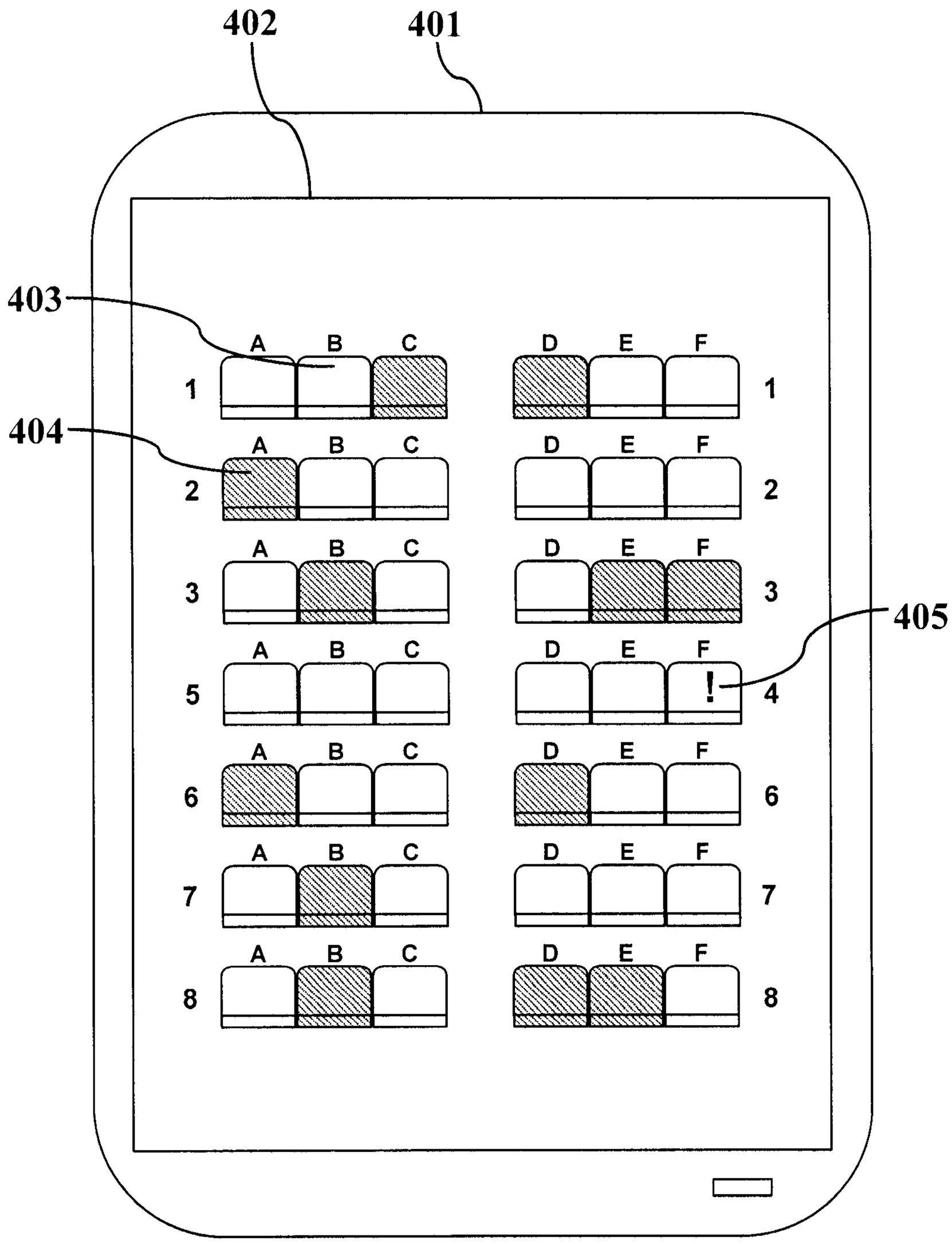

FIG. 4

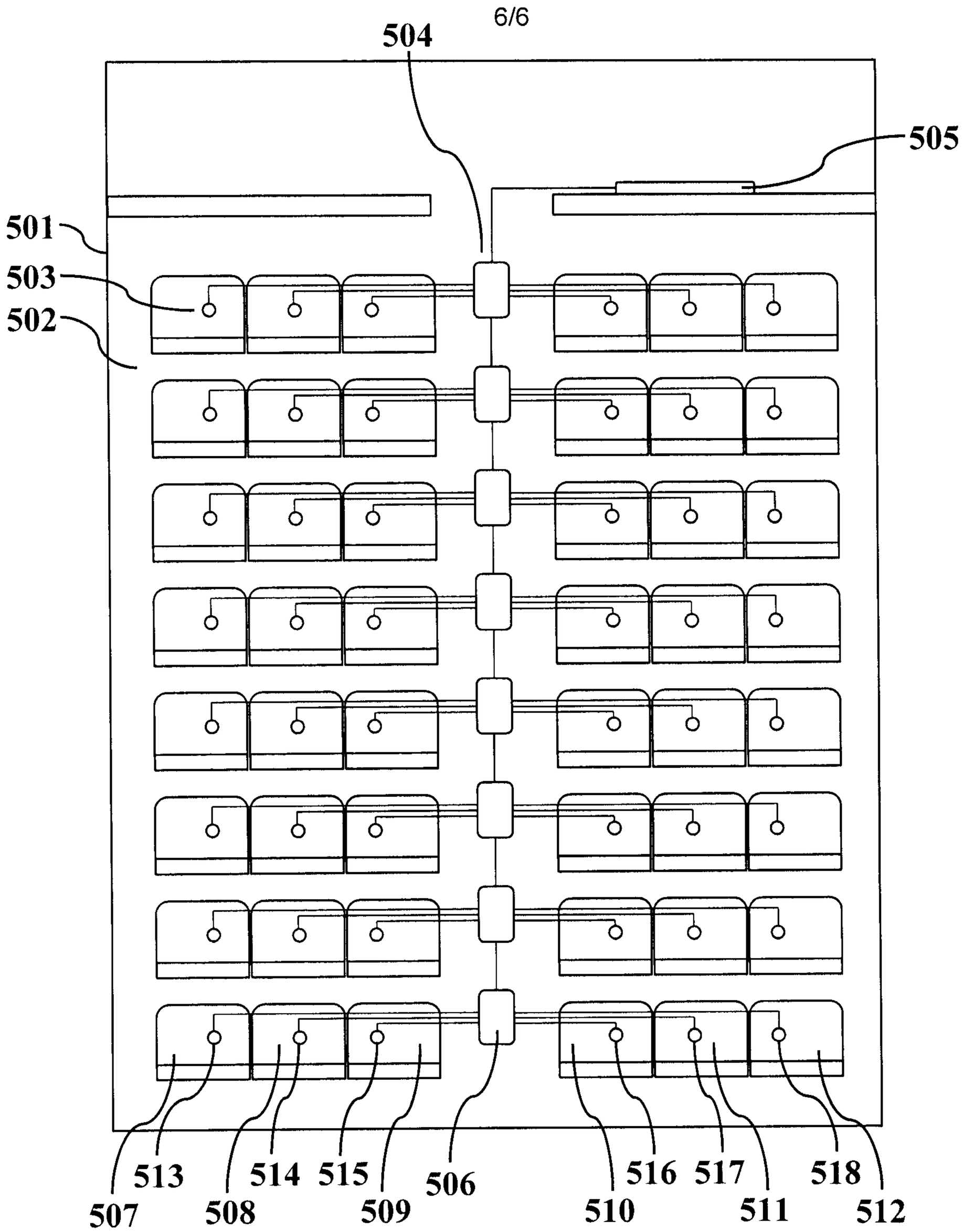
504
505
501
503
502
513
514
515
506
516
517
518
507
508
509
510
511
512

FIG. 5

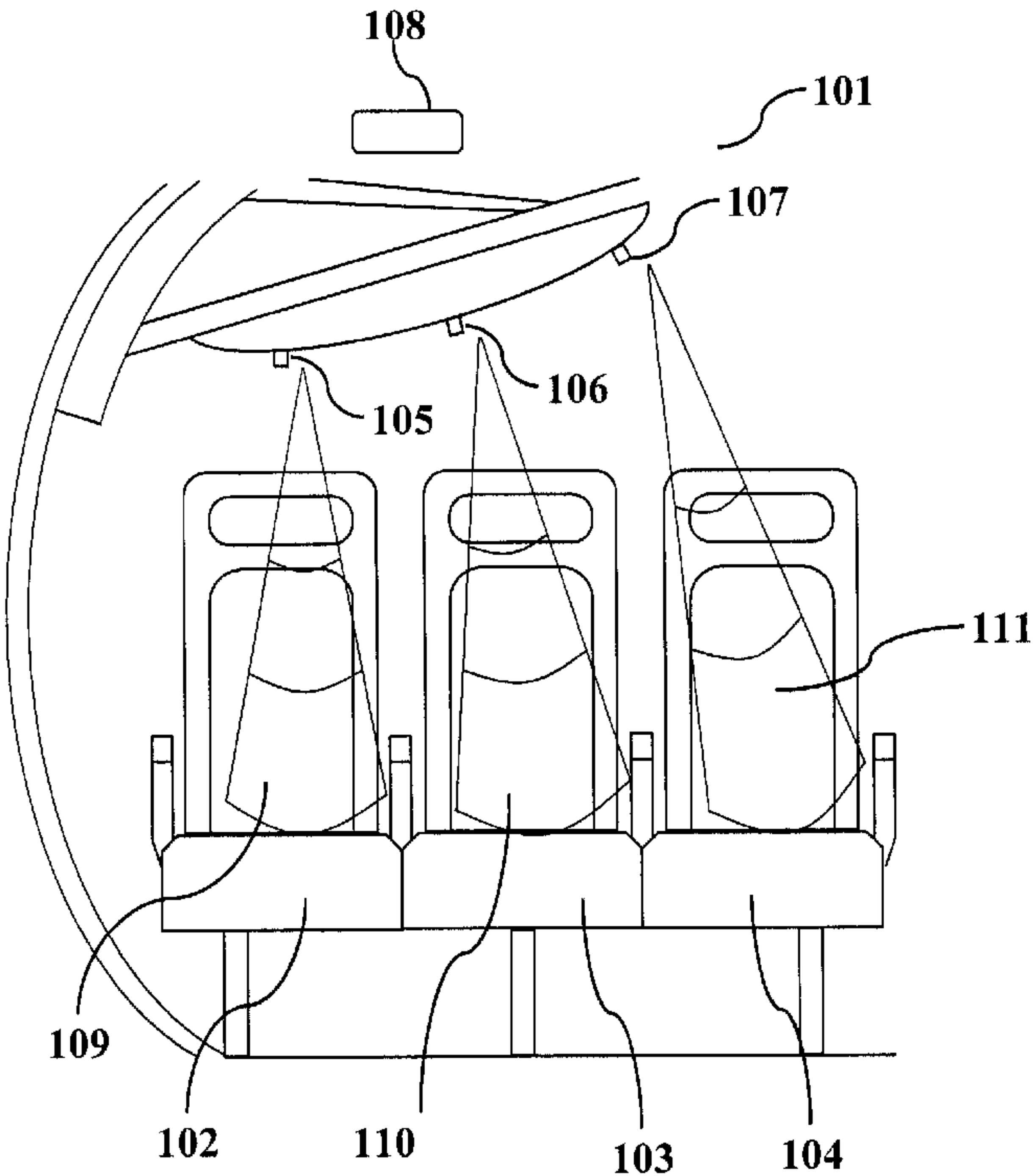
108
101
107
106
105
111
109
102
110
103
104