(12) INTERNATIONAL APPLICATION PUBLISHED UNDER THE PATENT COOPERATION TREATY (PCT)

(19) World Intellectual Property Organization
International Bureau

(43) International Publication Date
08 June 2023 (08.06.2023)

WIPO | PCT

(10) International Publication Number
WO 2023/101950 A1

(51) International Patent Classification:
A61B 34/35 (2016.01) *B25J 9/16* (2006.01)
A61B 34/00 (2016.01)

(21) International Application Number:
PCT/US2022/051225

(22) International Filing Date:
29 November 2022 (29.11.2022)

(25) Filing Language: English

(26) Publication Language: English

(30) Priority Data:
63/284,506 30 November 2021 (30.11.2021) US

(71) Applicant: **ENDOQUEST ROBOTICS, INC.** [US/US]; 9310 Kirby Drive, Suite 100, Houston, TX 77054 (US).

(72) Inventors: **CHOI, Jiwon**; 8181 Fannin Street, Apt. 2531, Houston, TX (US). **LEE, Jeihan**; 3810 Law St., Apt. 310, Houston, TX 77005 (US). **NOH, Jinseok**; 8333 Braesmain Dr., Apt. 1426, Houston, TX 77025 (US). **KANG, Yang-jae**; 1825 San Jacinto St., Apt. 845, Houston, TX 77002 (US). **SHIN, Dongsuk**; 2135 Kipling St., Houston, TX 77098 (US).

(74) Agent: **FIORELLO, Daniel, J.** et al.; Locke Lord LLP, P.O. Box 55874, Boston, MA 02205 (US).

(81) Designated States *(unless otherwise indicated, for every kind of national protection available)*: AE, AG, AL, AM, AO, AT, AU, AZ, BA, BB, BG, BH, BN, BR, BW, BY, BZ, CA, CH, CL, CN, CO, CR, CU, CV, CZ, DE, DJ, DK, DM, DO, DZ, EC, EE, EG, ES, FI, GB, GD, GE, GH, GM, GT, HN, HR, HU, ID, IL, IN, IQ, IR, IS, IT, JM, JO, JP, KE, KG, KH, KN, KP, KR, KW, KZ, LA, LC, LK, LR, LS, LU, LY, MA, MD, MG, MK, MN, MW, MX, MY, MZ, NA, NG, NI, NO, NZ, OM, PA, PE, PG, PH, PL, PT, QA, RO, RS, RU, RW, SA, SC, SD, SE, SG, SK, SL, ST, SV, SY, TH, TJ, TM, TN, TR, TT, TZ, UA, UG, US, UZ, VC, VN, WS, ZA, ZM, ZW.

(84) Designated States *(unless otherwise indicated, for every kind of regional protection available)*: ARIPO (BW, CV, GH, GM, KE, LR, LS, MW, MZ, NA, RW, SD, SL, ST, SZ, TZ, UG, ZM, ZW), Eurasian (AM, AZ, BY, KG, KZ, RU,

(54) Title: POSITION CONTROL FOR PATIENT CONSOLE

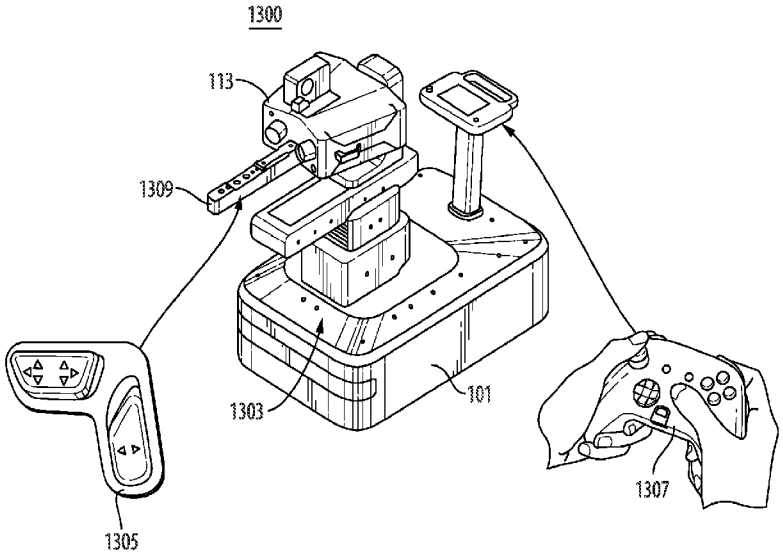

Fig. 13A

(57) Abstract: A patient console for a robotic surgical system can include a base, and a positioning assembly attached to the base and configured to position an instrument controller assembly. The positioning assembly includes a remote control device operatively connected to the positioning assembly to control movement of one or more portions of the positioning assembly such that a user is capable of having a direct line-of-sight of a patient when using the remote control device.

WO 2023/101950 A1

[Continued on next page]

TJ, TM), European (AL, AT, BE, BG, CH, CY, CZ, DE, DK, EE, ES, FI, FR, GB, GR, HR, HU, IE, IS, IT, LT, LU, LV, MC, ME, MK, MT, NL, NO, PL, PT, RO, RS, SE, SI, SK, SM, TR), OAPI (BF, BJ, CF, CG, CI, CM, GA, GN, GQ, GW, KM, ML, MR, NE, SN, TD, TG).

Published:

— *with international search report (Art. 21(3))*

— *before the expiration of the time limit for amending the claims and to be republished in the event of receipt of amendments (Rule 48.2(h))*

POSITION CONTROL FOR PATIENT CONSOLE

CROSS-REFERENCE TO RELATED APPLICATIONS

This application claims priority to and the benefit of U.S. Provisional Application No. 63/284,506, filed November 30, 2021, the entire contents of which are herein incorporated by reference in their entirety.

FIELD

This disclosure relates to robotic surgical systems, e.g., for minimally invasive surgery including, but not limited to, endoluminal and single-site surgery.

BACKGROUND

Minimally invasive surgery such as endoluminal and single-site robotic surgery offer significant advantages versus traditional robotic surgery. For example, in endoluminal robotic surgery, no incision need be made to access difficult to access locations within a patient's natural lumen. This dramatically reduces and/or eliminates recovery time and improves procedural safety. A single-site system reduces incisions to a minimum single-site, which reduces an otherwise larger number of incisions to provide access for certain procedures.

Certain endoluminal and single-site robotic surgical systems have been proposed. Examples of such systems and related components can be found in U.S. Patent No. 10,881,422, as well as U.S. Patent Application Nos. US20210322046, US20210322045, US20190117247, US20210275266, US20210267702, US20200107898, US20200397457, US202000397456, US20200315645, and US201962914226, all of the above being incorporated by reference herein in their entirety.

Conventional surgical robotics and systems have generally been considered satisfactory for their intended purpose. However, there is still a need in the art for improved robotic surgical systems, devices, methods, controls, and components, especially those configured for

endoluminal and single-site surgery. The present disclosure provides improvements in such areas, for example.

SUMMARY

In accordance with at least one aspect of this disclosure, a patient console for a robotic surgical system can include a base, and a positioning assembly attached to the base and configured to position an instrument controller assembly. The positioning assembly includes a remote control device operatively connected to the positioning assembly to control movement of one or more portions of the positioning assembly such that a user is capable of having a direct line-of-sight of a patient when using the remote control device.

In certain embodiments, the remote control device can be configured to be mounted to or is mounted to an exterior of a portion of the instrument controller assembly and/or the base. For example, the remote control device can be removeably mounted to the instrument controller assembly and/or the base. In certain embodiments, the remote control device is configured to be mounted to or is mounted to an overtube arm of the instrument controller assembly. The overtube arm can be configured to receive and/or support an overtube thereon (e.g., to control a position of the overtube as shown and disclosed herein). In certain embodiments, the remote control device is wirelessly connected to the positioning assembly.

The control device can include a controller having one or more joysticks and/or one or more buttons. In certain embodiments, the control device can be configured control less than all portions of the positioning assembly.

In accordance with at least one aspect of this disclosure, a patient console for a robotic surgical system can include a base, and a positioning assembly attached to the base and configured to position an instrument controller assembly. The patient console can include the instrument controller assembly. A control device can be mounted to the instrument controller assembly and operatively connected to the positioning assembly to control movement of one or more portions of the positioning assembly such that a user is capable of having a direct line-

of-sight of a patient when using the control device. The control device can be mounted and/or otherwise be similar to any suitable control device disclosed herein (e.g., as described above).

In accordance with at least one aspect of this disclosure, a robotic surgical system can include a patient console having a base and a positioning assembly attached to the base and configured to position an instrument controller assembly. The positioning assembly can be any suitable positioning assembly disclosed herein, e.g., as described above.

In accordance with at least one aspect of this disclosure, a method can include controlling movement of one or more portions of a positioning assembly attached to a base of a patient console using a remote control device operatively connected to the positioning assembly while maintaining a direct line-of-sight of a patient. In certain embodiments, controlling the movement of the one or more portions of the positioning assembly includes using the remote control device while the remote control device is mounted to an exterior of a portion of the instrument controller assembly. In certain embodiments, controlling the movement of the one or more portions of the positioning assembly includes using the remote control device while the remote control device is mounted to an overtube arm of the instrument controller assembly which has an overtube thereon. In certain embodiments, controlling the movement of the one or more portions of the positioning assembly includes using a controller having one or more joysticks and one or more buttons. In certain embodiments, controlling the movement of the one or more portions of the positioning assembly includes controlling less than all portions of the positioning assembly. In certain embodiments, the remote control device is wirelessly connected to the positioning assembly.

These and other features of the embodiments of the subject disclosure will become more readily apparent to those skilled in the art from the following detailed description taken in conjunction with the drawings.

BRIEF DESCRIPTION OF THE DRAWINGS

So that those skilled in the art to which the subject disclosure appertains will readily understand how to make and use the devices and methods of the subject disclosure without undue experimentation, embodiments thereof will be described in detail herein below with reference to certain figures, wherein:

Fig. 1 is a perspective view of an embodiment of a patient console in accordance with this disclosure;

Fig. 2 is a schematic view of the embodiment of Fig. 1, showing five degrees of freedom at five joints;

Fig. 2A is a schematic view of the embodiment as shown in Fig. 2, illustrating axes of motion (e.g., A1, A2, A3, and A4);

Fig. 3 is another view of the embodiment of Fig. 2, showing the five degrees of freedom;

Fig. 4 is an elevation view of the embodiment of Fig. 1, showing in a storage position;

Fig. 5 is a perspective view of the embodiment of Fig. 1, showing the positioning components and with the base and outer housing removed;

Fig. 6 is a perspective view of another embodiment of the positioning components of a patient console and with the base and outer housing removed;

Fig. 7 shows an embodiment of a graphical user interface (GUI) for an embodiment of a user input device of the patient console;

Figs. 8A and 8B illustrate a control the first joint, e.g., a vertical lift as shown;

Figs. 9A and 9B illustrate a control the second joint, e.g., a yaw rotation device as shown;

Figs. 10A and 10B illustrate a control the third joint, e.g., a pitch rotation device as shown;

Figs. 11A and 11B illustrate a control the fourth joint, e.g., a translation device as shown;

Figs. 12A and 12B illustrate a control the fifth joint, e.g., a roll rotation device;

Fig. 13A is a schematic perspective view of an embodiment of a patient console in accordance with this disclosure;

Fig. 13B is a partial elevation view of the embodiment of Fig. 13A;

Fig. 13C is a schematic perspective view of the embodiment of Fig. 13A, shown being controlled remotely with a controller; and

Fig. 14 illustrates an embodiment of a robotic surgical system in accordance with this disclosure.

DETAILED DESCRIPTION

Reference will now be made to the drawings wherein like reference numerals identify similar structural features or aspects of the subject disclosure. For purposes of explanation and illustration, and not limitation, an illustrative view of an embodiment of a system in accordance with the disclosure is shown in Fig. 1 and is designated generally by reference character 100. Other embodiments and/or aspects of this disclosure are shown in Figs. 2-14.

Referring to Figs. 1-6 a patient console 100 (e.g., a cart) for a robotic surgical system can include a base 101 and a positioning arm 102. The positioning arm 102 includes a vertical lift 103 (e.g., joint J1) attached to a top of the base 101 and configured to provide up and down motion in a vertical axis A1. The patient console 100 can include a yaw rotation device 105 (e.g., joint J2) attached to the top of the vertical lift 103 and configured to provide a yaw rotation about the vertical axis A1. The patient console 100 can include a pitch rotation device 107 (e.g., joint J3) attached to the top of the yaw rotation device 105 to provide a pitch rotation about a pitch axis A2 orthogonal to the vertical axis A1. The patient console 100 can include a translation device 109 (e.g., joint J4) attached to the top of the pitch rotation device 107 and configured to provide sliding translation along a translation axis A3. The patient console 100 can include a roll rotation device 111 (e.g., joint J5) attached to the translation device 109 to roll relative to the translation device 109 about a roll axis A4 to provide a roll to an instrument controller assembly 113.

An angle of the translation axis A3 and the roll axis A4 relative to horizontal can be a function of the pitch rotation provided by the pitch rotation device 107. A direction of the translation axis A3 and the roll axis A4 can be a function of the yaw rotation provided by the yaw rotation device 105.

The console 100 can include an instrument controller 113 assembly connected to the roll rotation device 111, the instrument controller assembly 113 including one or more instrument controllers 115 for controlling a medical device (not shown) for performing a surgical operation. The vertical lift 103, the yaw rotation device 105, the pitch rotation device 107, the translation device 109, and the roll rotation device 111 can provide 5-degrees of freedom to the instrument controller assembly 113 (and thus the overtube 117 mounted thereon), for example. In certain embodiments, the base 101 can be configured to move relative to a floor to provide an additional degree of freedom of motion.

The patient console 100 can be configured to allow for positioning of a medical device for a transanal procedure, a transoral procedure, or a transvaginal procedure. Any other suitable procedure is contemplated herein.

The console 100 can include a user input device 119 attached to the base 101 and configured to control each of the vertical lift 103, the yaw rotation device 105, the pitch rotation device 107, the translation device 109, and the roll rotation device 111. Referring additionally to Fig. 7, the user input device 119 can include a display 121 (e.g., a touchscreen) having a graphical user interface (GUI) 700 for controlling each of the vertical lift 103, the yaw rotation device 105, the pitch rotation device 107, the translation device 109, and the roll rotation device 111. As shown, the GUI 700 can be configured to indicate an orientation and position of the instrument controller assembly 113 from one or more angles. The GUI 700 can be configured to have any suitable digital buttons, inputs, indicators, images, text, and/or other content (e.g., arrow buttons indicating the direction of rotation as shown and/or any other indicators and/or control buttons.

In certain embodiments, one or more of the vertical lift 103, the yaw rotation device 105, the pitch rotation device 107, the translation device 109, and the roll rotation device 111

can be controlled by a remote surgeon console in addition to the user input device 119, for example. In certain embodiments, the user input device 119 can control all of the vertical lift 103, the yaw rotation device 105, the pitch rotation device 107, the translation device 109, and the roll rotation device 111, and a remote surgeon console can control the translation device 109 and the roll rotation device 111 only.

Fig. 1 is a perspective view of an embodiment of a patient console in accordance with this disclosure. Fig. 2 is a schematic view of the embodiment of Fig. 1, showing five degrees of freedom at five joints (e.g., J1, J2, J3, J4, J5). Fig. 3 is another view of the embodiment of Fig. 2, showing the five degrees of freedom. Fig. 4 is an elevation view of the embodiment of Fig. 1, showing in a storage position. Fig. 5 is a perspective view of the embodiment of Fig. 1, showing the positioning components and with the base and outer housing removed. Fig. 6 is a perspective view of another embodiment of the positioning components of a patient console and with the base and outer housing removed. Fig. 7 shows an embodiment of a graphical user interface (GUI) for an embodiment of a user input device of the patient console. Figs. 8A and 8B illustrate a control the first joint (e.g., J1 as shown in Fig. 2), e.g., a vertical lift as shown. Figs. 9A and 9B illustrate a control the second joint (e.g., J2 as shown in Fig. 2), e.g., a yaw rotation device as shown. Figs. 10A and 10B illustrate a control the third joint (e.g., J3 as shown in Fig. 2), e.g., a pitch rotation device as shown. Figs. 11A and 11B illustrate a control the fourth joint (e.g., J4 as shown in Fig. 2), e.g., a translation device as shown. Figs. 12A and 12B illustrate a control the fifth joint (e.g., J5 as shown in Fig. 2), e.g., a roll rotation device.

Embodiments can be used for robotic surgical systems, for example. Any suitable uses and/or embodiments for use are contemplated herein.

Embodiments include five degree of freedom positioning patient console 100 (e.g., a patient cart). Embodiments can include an advantageous order of stacking of the degrees of freedom.

Embodiments can provide movements for the position of the overtube 117 attached to the overtube arm 200. Embodiments can include five joints and each joint provides specific motion. In certain embodiments, joint 1 can provides up/down motion within 0 – 400 mm. In certain embodiments, joint 2 can provide rotation motion within -90 – +150 degrees. In certain embodiments, joint 3 can provide tilting motion within 0–35 degrees downwards. In certain embodiments, joint 4 can provide translation motion within 0 – 400mm. In certain embodiments, joint 5 can provide rolling motion within -170 – +170 degrees.

In certain embodiments, all the joints can be controlled by a nurse using the touchscreen on the patient console 100. Joint 4 and Joint 5 can be controlled by a surgeon by using the hand control devices and overtube pedal on the surgeon console (not shown).

Certain embodiments can include an interface (e.g. user input device 119) that has a touchscreen (e.g. the display 121), a base cart handle 123, and stabilizer. Certain embodiments can allow control of the mobility of the patient console 100 system with drive control switches and the direction of force applied on the base cart handle 123. Certain embodiments can allow control via the base cart handle 123 is activated only when the drive control switches are pressed down halfway and held. Certain embodiments can be immobilized by activating the stabilizers via a touchscreen to prevent unwanted movement during surgery.

Embodiments of a user input device 119 can be used to control the positioning arm 102 and patient console 100. Embodiments of a user input device can indicate the status of the patient console 100. Embodiments of a user input device 119 can provide a setting menu for

the base cart and its touchscreen. Embodiments of a user input device can display buttons to control movements of the positioning arm 102.

Embodiments of a touchscreen GUI 700 can include a loading user interface that displays immediately when the power is on and initializes the patient console 100 and touchscreen. The GUI can include a home screen that provides access menu buttons to the Pose Setting, Patient Cart, and Diagnosis, for example. Embodiments of a GUI 700 can include a Patient Cart Setting Screen that provides detailed settings of the patient console 100 to adjust values related to mobility. The GUI 700 can include a Setting Screen that provides a setting menu to adjust the brightness of the touch screen. The GUI 700 can include a pose setting screen that provides touch buttons to adjust the pose setting of each joint of the positioning arm 102. In Fig. 7, various modes of exemplary indicators are provided in the GUI 700. Embodiments of a GUI can include a mobility indicator that shows whether the patient console 100 can be moved or not. Embodiments can include an error indicator that shows normal or abnormal status of the system with two colors of green and orange. If the error is occurred, orange color can be showing.

An emergency stop indicator can show activation of the emergency stop. When the emergency stop is activated, the icon can be changed to orange and red colors. Embodiments can include a home button that can provides function to return to the home screen. Embodiments can include a setting button that provides a function to activate a setting menu. Embodiments can include a stabilizer on/off button that provides a function to activate /deactivate the stabilizer of the patient console 100.

In certain embodiments, a user can move the positioning arm 102 to the required target region by using the positioning arm 102 touchscreen controls. A user can insert the overtube

117 into the patient, and then move the positioning arm to align with the overtube 117. A user can then connect the overtube 117 to the overtube arm 200 and tighten the knobs.

The user can control the positioning arm 102 using the touchscreen controls provided on the patient console 100 . The user can push the buttons provided on the touchscreen to move each joint of the positioning arm 102. The positioning arm 102 can provide five degrees of freedom of motion. A user can press and hold the button shown on the touchscreen to move the joint in the specified direction. The user can release the touchscreen button to stop moving the positioning arm 102. Table 1 shows an embodiment of motions provided by each joint J1-J5.

Joint	Motion Direction	Motion Direction
J1	Up	Down
J2	Right	Left
J3	Head Up	Head Down
J4	Backward	Forward
J5	Counterclockwise	Clockwise

Table 1

In certain embodiments, a surgeon can control the positioning arm 102 Joints 4 and 5 using hand control device along with an overtube pedal on a surgeon console. Any suitable other control scheme is contemplated herein.

Referring to Fig. 13A, in accordance with at least one aspect of this disclosure, a patient console 1300 for a robotic surgical system can include a base 101, and a positioning assembly 1303 attached to the base 101 and configured to position an instrument controller assembly 113. The positioning assembly 1303 can be the same as that disclosed above with respect to the embodiment of Fig. 1, for example (e.g., including 5 degrees of freedom and associated rotation, lift, and translation devices). However, and other suitable positioning assembly is contemplated herein.

The positioning assembly 1303 can include a remote control device 1305, 1307 (either being wireless or wired) operatively connected to the positioning assembly 1303 (e.g., directly or indirectly) to control movement of one or more portions (e.g., one or more rotation, lift, and/or translation devices) of the positioning assembly 1303 such that a user is capable of having a direct line-of-sight of a patient when using the remote control device 1305, 1307. In certain embodiments, the remote control device 1305, 1307 can be wireless (e.g., connected to a user input device 119 that has a position control module for the positioning assembly 1303, otherwise connected to a position control module that controls motion of the positioning assembly 1303 as a function of inputs, or connected to directly control one or more portions of the positioning assembly 1303) such that it is wirelessly connected to the positioning assembly. In certain embodiments, the base 101 (e.g., one or more motorized wheels) can be controlled by the remote control device 1305, 1307.

In certain embodiments, the remote control device 1305 can be configured to be mounted to or is mounted to an exterior of a portion of the instrument controller assembly 113 as shown in Fig. 13B. For example, the control device 1305 can be removeably mounted to the instrument controller assembly 113 (e.g., via one or more magnets). However, it is contemplated that the control device 1305 may be fixed to the instrument controller assembly 113 as it can be within a surgical drape in use based on its location on the instrument controller assembly 113 (e.g., on an overtube arm). It is contemplated that multiple remote control devices can be utilized in various locations. Each can have a control priority such that control of a higher priority device overrides any accidental control from a lower priority device.

In certain embodiments, the remote control device 1305 is configured to be mounted to or is mounted to an overtube arm 1309 of the instrument controller assembly 113. The overtube arm 1309 can be configured to receive and/or support an overtube 117 thereon (e.g., to control

a position of the overtube as shown and disclosed herein). The overtube arm 1309 can house motors for driving one or more overtube steering devices (e.g., cables). As shown in Fig. 13C, mounting a remote (e.g., wireless or wired) control device 1305 to the overtube arm 1309 allows a user to be in front of the base 101 and to have a direct line of sight of the patient so as to be able to accurately and quickly position the patient console 1300 and overtube 117 relative to a patient. Any other suitable location to mount a remote control device 1305 is contemplated herein.

The remote control device 1307 can include a controller (e.g., a dual joystick video game controller as shown) having one or more joysticks and one or more buttons. However, any suitable input device (e.g., buttons only as shown on remote device 1305, a touch screen, any combination thereof) is contemplated herein. In certain embodiments, the user input device 119 (e.g., with touch screen input) can be wireless and detachable from a base steering post 1311 such that the user input device 119 can be the remote control device 1307.

In certain embodiments, the remote control device 1305, 1307 can be configured control less than all portions of the positioning assembly 1303. For example, the remote control device 1305 mounted to the overtube arm 1309 may be configured to only operate in the translation axis A3 and the vertical axis A1. However, the remote control device 1305, 1307 can be configured to operate any suitable portions (e.g., all or any other suitable combination of portions) of the positioning assembly 1303 and/or the base 101 (e.g., to control wheels) are contemplated herein (e.g., all the same functions as the user input device 119).

Embodiments can include a remote controller can be used by an assistant to adjust and position the patient console 1300 for docking, for example. In certain embodiments, user-friendly levers/buttons can be integrated into the positioning assembly 1303 and/or the instrument assembly 113 for the assistant to use. For example, certain embodiments include

an interface that has levers and/or buttons on an overtube arm 1309 or a remote control that can be used.

In accordance with at least one aspect of this disclosure, referring to Fig. 14, a robotic surgical system 1400 can include a patient console 100, 1300 having a base and a positioning assembly 1303. The patient console 100 and positioning assembly 1303 can be any suitable embodiment disclosed herein, e.g., console 100, 1300 as described above, for example. The robotic surgical system 1400 can include a surgeon console 200 configured to allow a surgeon to remotely operate one or more controllers connected to the patient console 100, 1300 (e.g., wirelessly or via a wired connection) to perform robotic surgery or other suitable medical procedure. Any suitable surgeon console 200 and/or control inputs are contemplated herein. In certain embodiments, the surgeon console 200 can be configured to allow control of one or more of the vertical lift 103, the yaw rotation device 105, the pitch rotation device 107, the translation device 109, and the roll rotation device 111 for positioning the medical instrument attached to the patient console 100 in situ. For example, the roll rotation device 111 can be configured to be operated by one or more hand controls of the surgeon console 200 to allow rotation of the overtube 117 (which contains one or more medical instruments and/or camera) about axis A4 to rotate the distal end of the medical device(s), camera, and/or overtube 117 in situ.

In accordance with at least one aspect of this disclosure, a method for performing a robotic medical procedure can include using a vertical lift 103 attached to a top of a base of a patient console to provide up and down motion in a vertical axis A1, using a yaw rotation device 105 attached to the top of the vertical lift 103 to provide a yaw rotation about the vertical axis A1, using a pitch rotation device 107 attached to the top of the yaw rotation device 105 and configured to provide a pitch rotation about a pitch axis A2 orthogonal to the vertical axis

A1, using a translation device 109 attached to the top of the pitch rotation device 107 and configured to provide sliding translation along a translation axis A3, and using a roll rotation device 111 attached to the translation device 109 to roll relative to the translation device 109 about a roll axis A4 to provide a roll to an instrument controller assembly 113. An angle of the translation axis A3 and the roll axis A4 relative to horizontal can be a function of the pitch rotation provided by the pitch rotation device 107 (about axis A2). A direction of the translation axis A3 and the roll axis A4 can be a function of the yaw rotation about the vertical axis A1 provided by the yaw rotation device 105.

The method can include using an instrument controller assembly 113 having one or more instrument controllers 115 connected to the roll rotation device 111 for controlling a medical device for performing a surgical operation, and using the vertical lift 103, the yaw rotation device 105, the pitch rotation device 107, the translation device 109, and the roll rotation device 111 provide 5-degrees of freedom to the instrument controller assembly 113. The method can include moving the base of the patient console 100 relative to a floor (on which the patient console 100 is standing) to provide an additional degree of freedom of motion. The method can include positioning a medical device for a transanal procedure, a transoral procedure, or a transvaginal procedure.

The method can include controlling each of the vertical lift 103, the yaw rotation device 105, the pitch rotation device 107, the translation device 109, and the roll rotation device 111 with a user input device. The method can include using a graphical user interface (GUI) 700 to control each of the vertical lift 103, the yaw rotation device 105, the pitch rotation device 107, the translation device 109, and the roll rotation device 111. The method can include any other suitable method(s) and/or portion(s) thereof.

In accordance with at least one aspect of this disclosure, a method can include controlling movement of one or more portions of a positioning assembly 1303 attached to a base 101 of a patient console 1300 using a remote control device 1305 and/or 1307 operatively connected to the positioning assembly 1303 and/or base 1307 while maintaining a direct line-of-sight of a patient (e.g., on a surgical table). In certain embodiments, controlling the movement of the one or more portions of the positioning assembly 1303 can include using the remote control device 1305 while the remote control device 1305 is mounted to an exterior of a portion of an instrument controller assembly 113 and/or base 101. In certain embodiments, controlling the movement of the one or more portions of the positioning assembly 1303 can include using the remote control device 1305 while the remote control device is mounted to an overtube arm 1309 of the instrument controller assembly 113 (e.g., which has an overtube mounted thereon during a medical procedure). In such embodiments, the overtube arm 1309 can be draped during use and inside the sterile zone such that a user presses on the drape to operate the remote control device 1305 (e.g., which can have one or more push buttons). In this way, the remote control device 1305 remains sterile and the sterile zone remains intact.

In certain embodiments, controlling the movement of the one or more portions of the positioning assembly 1303 can include using a controller 1307 having one or more joysticks and/or one or more buttons (e.g., a videogame controller as shown). However, any other suitable control structure for controlling movement of the base 101 and/or positioning assembly 1303 is contemplated herein. For example, the remote control device 1307 can be a removeable touch screen (e.g., shown on a pedestal attached to the base 101) which can be wirelessly connected to or wired to the base 101 to control the base 101 and/or the positioning assembly 1303 remotely from the system 1300. In certain embodiments, the removeable touch screen can include one or more joysticks and/or physical buttons, for example.

In certain embodiments, controlling the movement of the one or more portions of the positioning assembly 1303 can include controlling less than all portions of the positioning assembly 1303. For example, the controls on the remote control device 1305, 1307 can be limited to one or more axes of control to limit erroneous movement and for patient safety. For example, the remote control device 1305 can be configured to provide only movements in a forward and backward axis, and/or and up and down axis for general positioning of an overtube.

As will be appreciated by those skilled in the art, aspects of the present disclosure may be embodied as a system, method or computer program product. Accordingly, aspects of this disclosure may take the form of an entirely hardware embodiment, an entirely software embodiment (including firmware, resident software, micro-code, etc.), or an embodiment combining software and hardware aspects, all possibilities of which can be referred to herein as a "circuit," "module," or "system." A "circuit," "module," or "system" can include one or more portions of one or more separate physical hardware and/or software components that can together perform the disclosed function of the "circuit," "module," or "system", or a "circuit," "module," or "system" can be a single self-contained unit (e.g., of hardware and/or software). Furthermore, aspects of this disclosure may take the form of a computer program product embodied in one or more computer readable medium(s) having computer readable program code embodied thereon.

Any combination of one or more computer readable medium(s) may be utilized. The computer readable medium may be a computer readable signal medium or a computer readable storage medium. A computer readable storage medium may be, for example, but not limited to, an electronic, magnetic, optical, electromagnetic, infrared, or semiconductor system, apparatus, or device, or any suitable combination of the foregoing. More specific examples (a non-exhaustive list) of the computer readable storage medium would include the following: an

electrical connection having one or more wires, a portable computer diskette, a hard disk, a random access memory (RAM), a read-only memory (ROM), an erasable programmable read-only memory (EPROM or Flash memory), an optical fiber, a portable compact disc read-only memory (CD-ROM), an optical storage device, a magnetic storage device, or any suitable combination of the foregoing. In the context of this document, a computer readable storage medium may be any tangible medium that can contain, or store a program for use by or in connection with an instruction execution system, apparatus, or device.

A computer readable signal medium may include a propagated data signal with computer readable program code embodied therein, for example, in baseband or as part of a carrier wave. Such a propagated signal may take any of a variety of forms, including, but not limited to, electro-magnetic, optical, or any suitable combination thereof. A computer readable signal medium may be any computer readable medium that is not a computer readable storage medium and that can communicate, propagate, or transport a program for use by or in connection with an instruction execution system, apparatus, or device.

Program code embodied on a computer readable medium may be transmitted using any appropriate medium, including but not limited to wireless, wireline, optical fiber cable, RF, etc., or any suitable combination of the foregoing.

Computer program code for carrying out operations for aspects of this disclosure may be written in any combination of one or more programming languages, including an object oriented programming language such as Java, Smalltalk, C++ or the like and conventional procedural programming languages, such as the "C" programming language or similar programming languages. The program code may execute entirely on the user's computer, partly on the user's computer, as a stand-alone software package, partly on the user's computer and partly on a remote computer or entirely on the remote computer or server. In the latter scenario,

the remote computer may be connected to the user's computer through any type of network, including a local area network (LAN) or a wide area network (WAN), or the connection may be made to an external computer (for example, through the Internet using an Internet Service Provider).

Aspects of this disclosure may be described above with reference to flowchart illustrations and/or block diagrams of methods, apparatus (systems) and computer program products according to embodiments of this disclosure. It will be understood that each block of any flowchart illustrations and/or block diagrams, and combinations of blocks in any flowchart illustrations and/or block diagrams, can be implemented by computer program instructions. These computer program instructions may be provided to a processor of a general purpose computer, special purpose computer, or other programmable data processing apparatus to produce a machine, such that the instructions, which execute via the processor of the computer or other programmable data processing apparatus, create means for implementing the functions/acts specified in any flowchart and/or block diagram block or blocks.

These computer program instructions may also be stored in a computer readable medium that can direct a computer, other programmable data processing apparatus, or other devices to function in a particular manner, such that the instructions stored in the computer readable medium produce an article of manufacture including instructions which implement the function/act specified in the flowchart and/or block diagram block or blocks.

The computer program instructions may also be loaded onto a computer, other programmable data processing apparatus, or other devices to cause a series of operational steps to be performed on the computer, other programmable apparatus or other devices to produce a computer implemented process such that the instructions which execute on the computer or

other programmable apparatus provide processes for implementing the functions/acts specified herein.

Those having ordinary skill in the art understand that any numerical values disclosed herein can be exact values or can be values within a range. Further, any terms of approximation (e.g., "about", "approximately", "around") used in this disclosure can mean the stated value within a range. For example, in certain embodiments, the range can be within (plus or minus) 20%, or within 10%, or within 5%, or within 2%, or within any other suitable percentage or number as appreciated by those having ordinary skill in the art (e.g., for known tolerance limits or error ranges).

The articles "a", "an", and "the" as used herein and in the appended claims are used herein to refer to one or to more than one (i.e., to at least one) of the grammatical object of the article unless the context clearly indicates otherwise. By way of example, "an element" means one element or more than one element.

The phrase "and/or," as used herein in the specification and in the claims, should be understood to mean "either or both" of the elements so conjoined, i.e., elements that are conjunctively present in some cases and disjunctively present in other cases. Multiple elements listed with "and/or" should be construed in the same fashion, i.e., "one or more" of the elements so conjoined. Other elements may optionally be present other than the elements specifically identified by the "and/or" clause, whether related or unrelated to those elements specifically identified. Thus, as a non-limiting example, a reference to "A and/or B", when used in conjunction with open-ended language such as "comprising" can refer, in one embodiment, to A only (optionally including elements other than B); in another embodiment, to B only (optionally including elements other than A); in yet another embodiment, to both A and B (optionally including other elements); etc.

As used herein in the specification and in the claims, "or" should be understood to have the same meaning as "and/or" as defined above. For example, when separating items in a list, "or" or "and/or" shall be interpreted as being inclusive, i.e., the inclusion of at least one, but also including more than one, of a number or list of elements, and, optionally, additional unlisted items. Only terms clearly indicated to the contrary, such as "only one of" or "exactly one of," or, when used in the claims, "consisting of," will refer to the inclusion of exactly one element of a number or list of elements. In general, the term "or" as used herein shall only be interpreted as indicating exclusive alternatives (i.e., "one or the other but not both") when preceded by terms of exclusivity, such as "either," "one of," "only one of," or "exactly one of."

Any suitable combination(s) of any disclosed embodiments and/or any suitable portion(s) thereof are contemplated herein as appreciated by those having ordinary skill in the art in view of this disclosure.

The embodiments of the present disclosure, as described above and shown in the drawings, provide for improvement in the art to which they pertain. While the subject disclosure includes reference to certain embodiments, those skilled in the art will readily appreciate that changes and/or modifications may be made thereto without departing from the spirit and scope of the subject disclosure.

What is claimed is:

1. A patient console for a robotic surgical system, comprising:

a base; and

a positioning assembly attached to the base and configured to position an instrument controller assembly, wherein the positioning assembly includes a remote control device operatively connected to the positioning assembly to control movement of one or more portions of the positioning assembly such that a user is capable of having a direct line-of-sight of a patient when using the remote control device.

2. The patient console of claim 1, wherein the remote control device is configured to be mounted to or is mounted to an exterior of a portion of the instrument controller assembly and/or the base.

3. The patient console of claim 2, wherein the remote control device is removeably mounted to the instrument controller assembly and/or the base.

4. The patient console of claim 1, wherein the remote control device is configured to be mounted to or is mounted to an overtube arm of the instrument controller assembly, wherein the overtube arm is configured to receive and/or support an overtube thereon.

5. The patient console of claim 1, wherein the control device includes a controller having one or more joysticks and/or one or more buttons.

6. The patient console of claim 1, wherein the control device is configured control less than all portions of the positioning assembly.

7. The patient console of claim 1, wherein the remote control device is wirelessly connected to the positioning assembly.

8. A patient console for a robotic surgical system, comprising:

a base; and

a positioning assembly attached to the base and configured to position an instrument controller assembly; and

the instrument controller assembly, wherein includes a control device is mounted to the instrument controller assembly and operatively connected to the positioning assembly to control movement of one or more portions of the positioning assembly such that a user is capable of having a direct line-of-sight of a patient when using the control device.

9. The patient console of claim 8, wherein the control device is mounted to an overtube arm of the instrument controller assembly, wherein the overtube arm is configured to receive and/or support an overtube thereon.

10. The patient console of claim 9, wherein the control device is configured control less than all portions of the positioning assembly.

11. A robotic surgical system, comprising:

a patient console, comprising:

a base; and

a positioning assembly attached to the base and configured to position an instrument controller assembly, wherein the positioning assembly includes a remote control device operatively connected to the positioning assembly to control movement of one or more portions of the positioning assembly such that a user is capable of having a direct line-of-sight of a patient when using the wireless control device.

12. The robotic surgical system of claim 11, wherein the remote control device is configured to be mounted to or is mounted to an exterior of a portion of the instrument controller assembly and/or the base.

13. The robotic surgical system of claim 12, wherein the remote control device is removeably mounted to the instrument controller assembly and/or the base.

14. The robotic surgical system of claim 11, wherein the remote control device is configured to be mounted to or is mounted to an overtube arm of the instrument controller assembly, wherein the overtube arm is configured to receive and/or support an overtube thereon.

15. The robotic surgical system of claim 11, wherein the control device includes a controller having one or more joysticks and/or one or more buttons.

16. The robotic surgical system of claim 11, wherein the control device is configured control less than all portions of the positioning assembly.

17. The robotic surgical system of claim 11, wherein the remote control device is wirelessly connected to the positioning assembly.

18. A method for controlling a positioning assembly, comprising:

controlling movement of one or more portions of the positioning assembly attached to a base of a patient console using a remote control device operatively connected to the positioning assembly while maintaining a direct line-of-sight of a patient.

19. The method of claim 18, wherein controlling the movement of the one or more portions of the positioning assembly includes using the remote control device while the remote control device is mounted to an exterior of a portion of the instrument controller assembly and/or the base.

20. The method of claim 18, wherein controlling the movement of the one or more portions of the positioning assembly includes using the remote control device while the remote control device is mounted to an overtube arm of the instrument controller assembly which has an overtube thereon.

21. The method of claim 18, wherein controlling the movement of the one or more portions of the positioning assembly includes using a controller having one or more joysticks and/or one or more buttons.

22. The method of claim 18, wherein controlling the movement of the one or more portions of the positioning assembly includes controlling less than all portions of the positioning assembly.

23. The method of claim 18, wherein the remote control device is wirelessly connected to the positioning assembly.

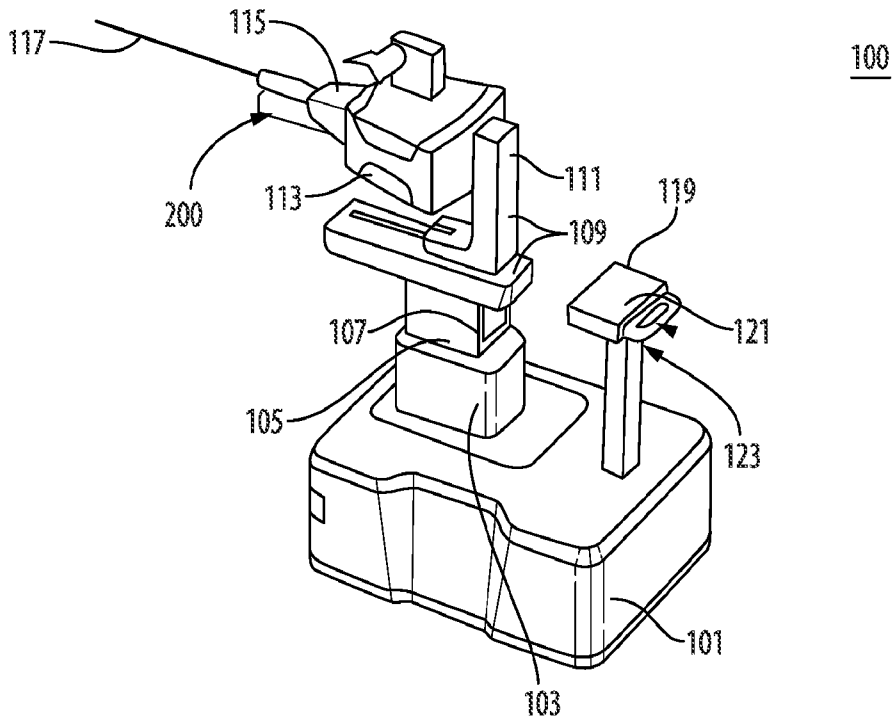

Fig. 1

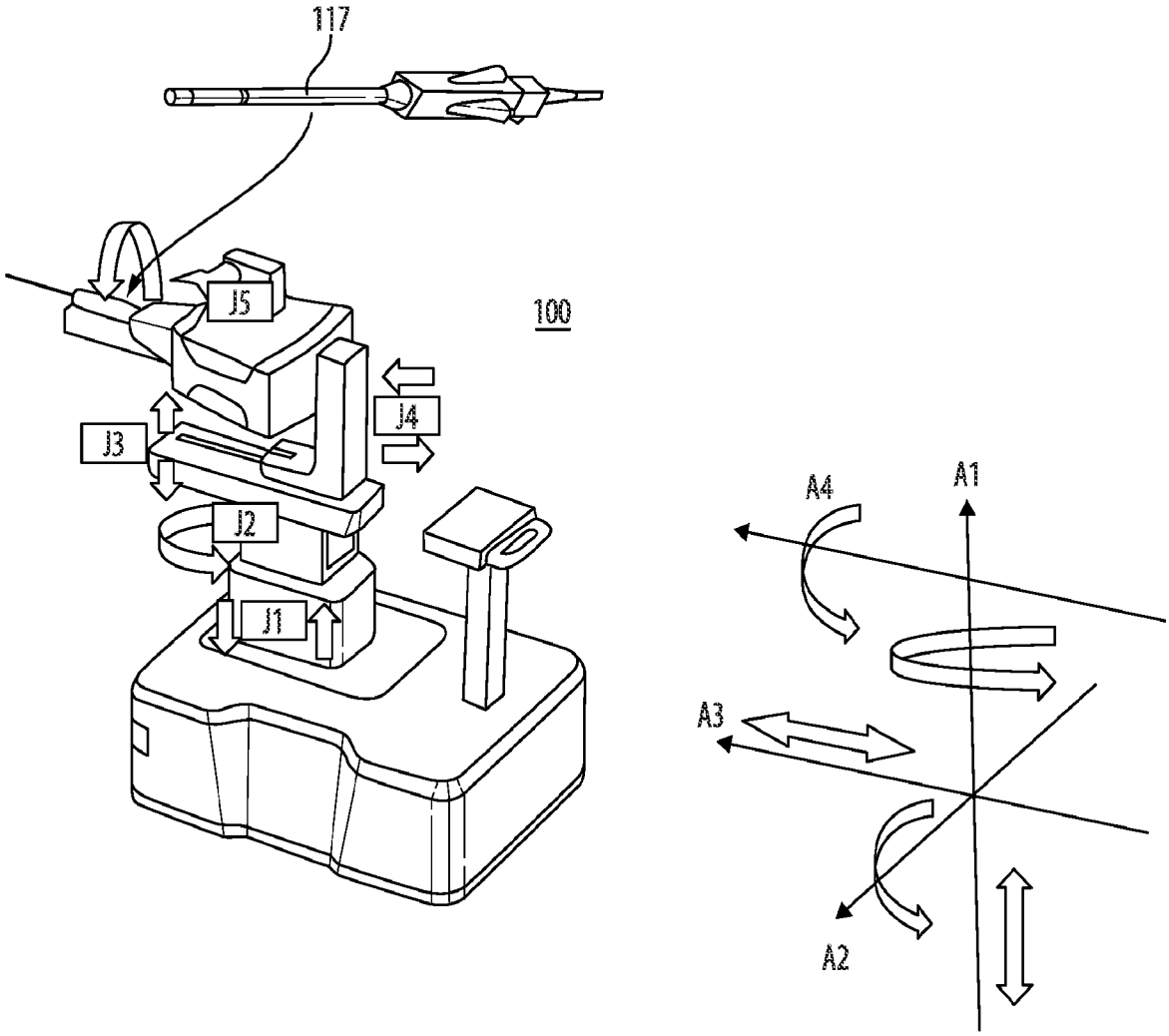

Fig. 2

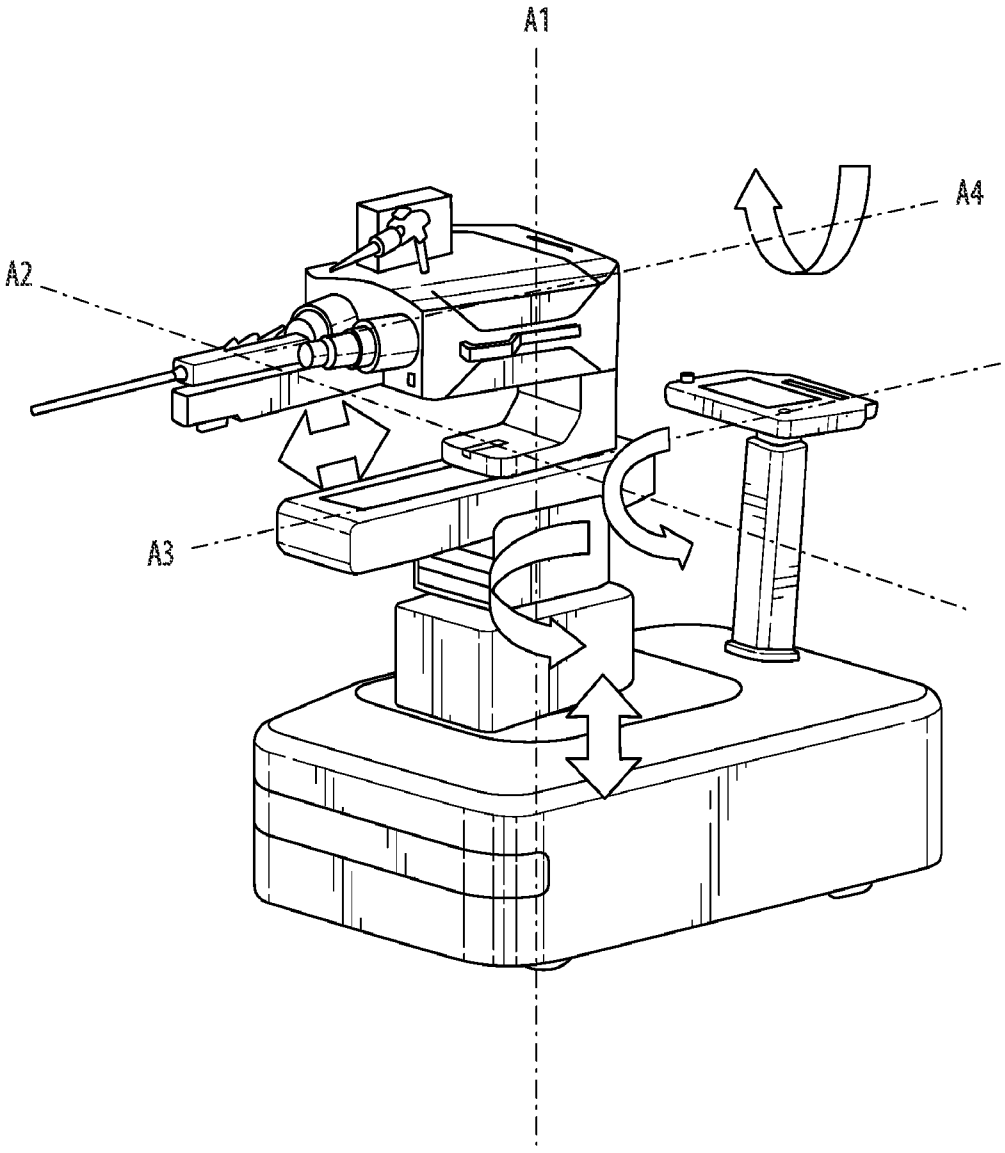

Fig. 2A

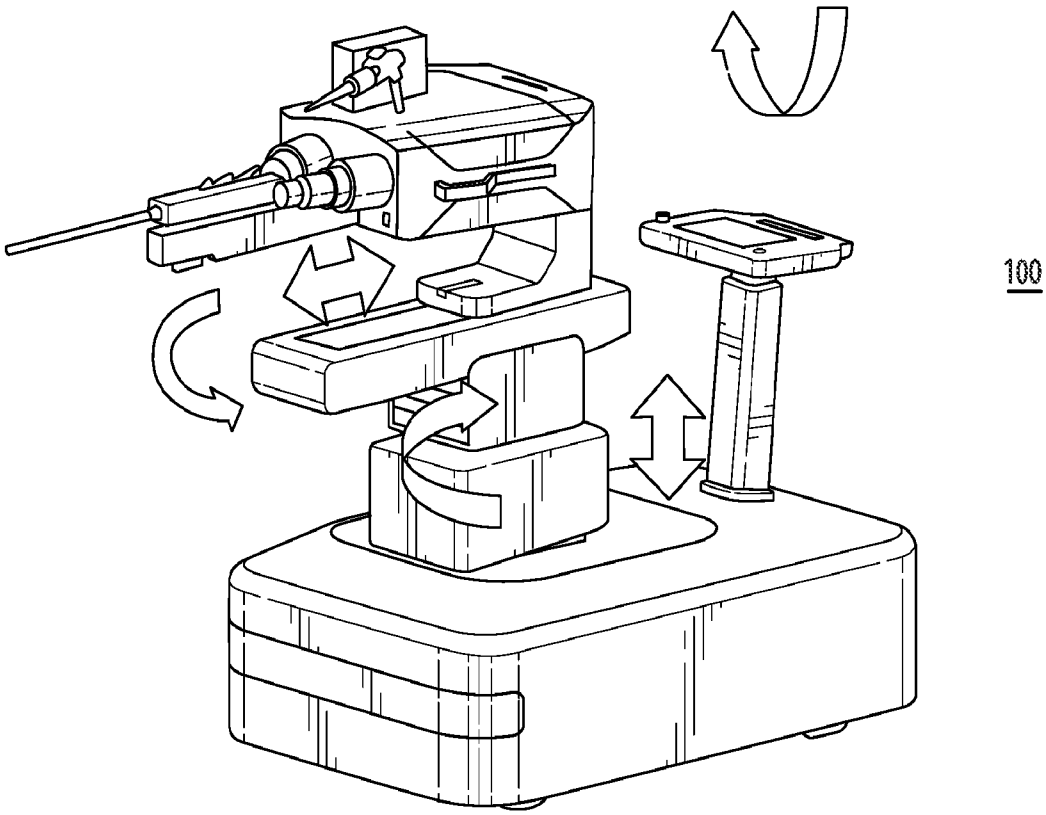

Fig. 3

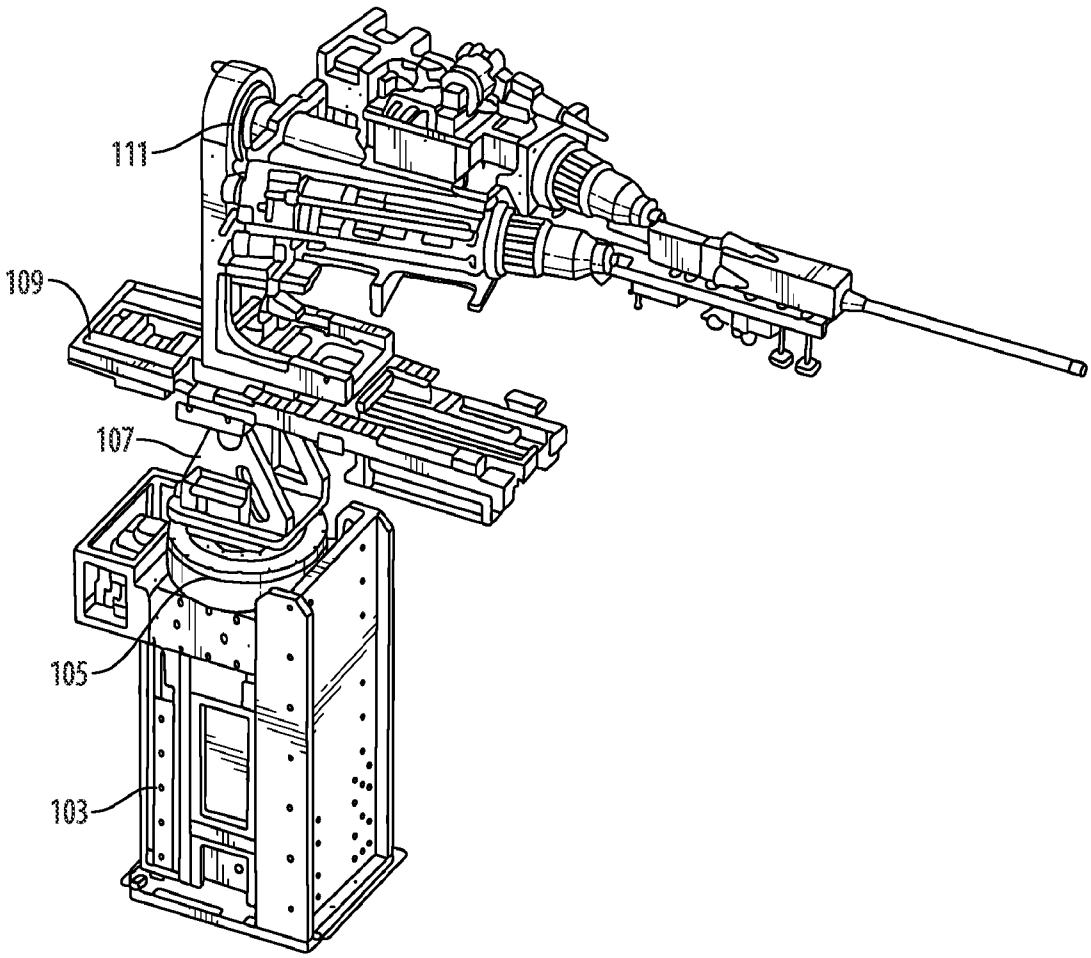

Fig. 4

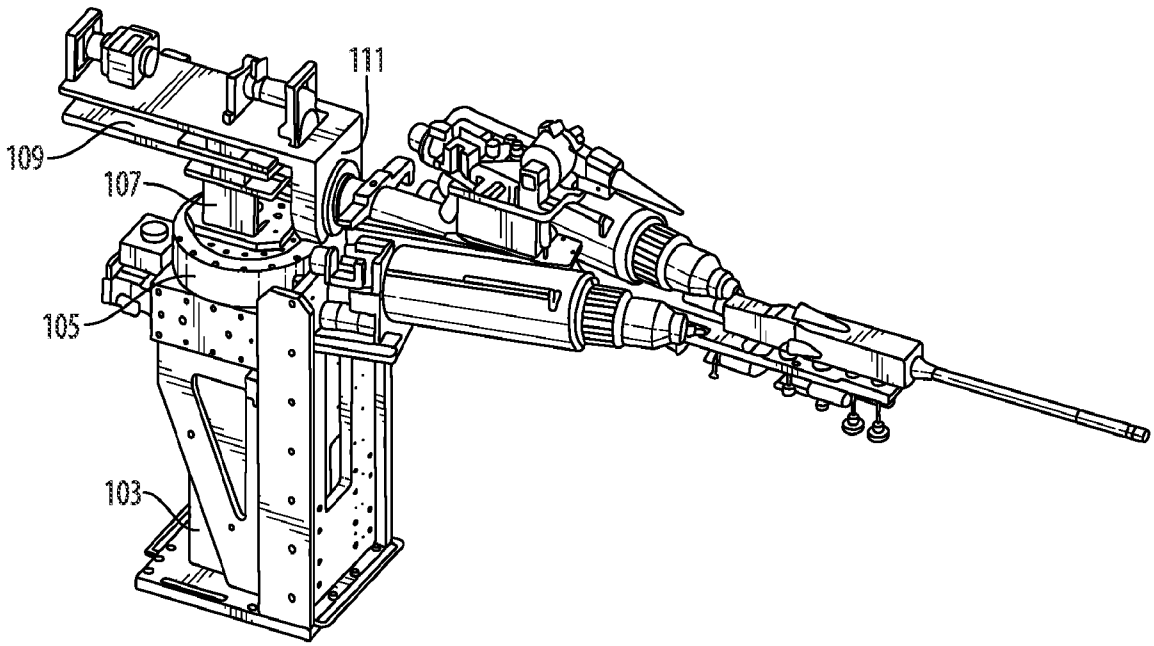

Fig. 5

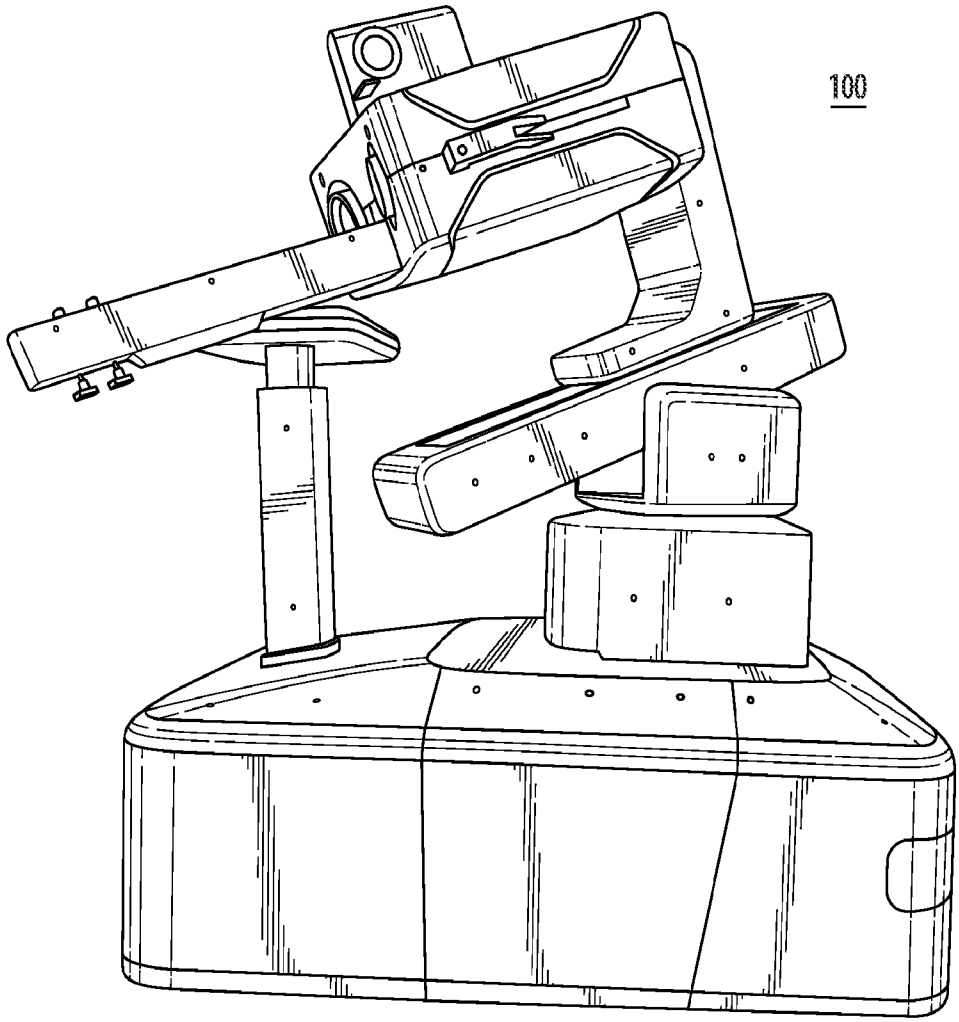

Fig. 6

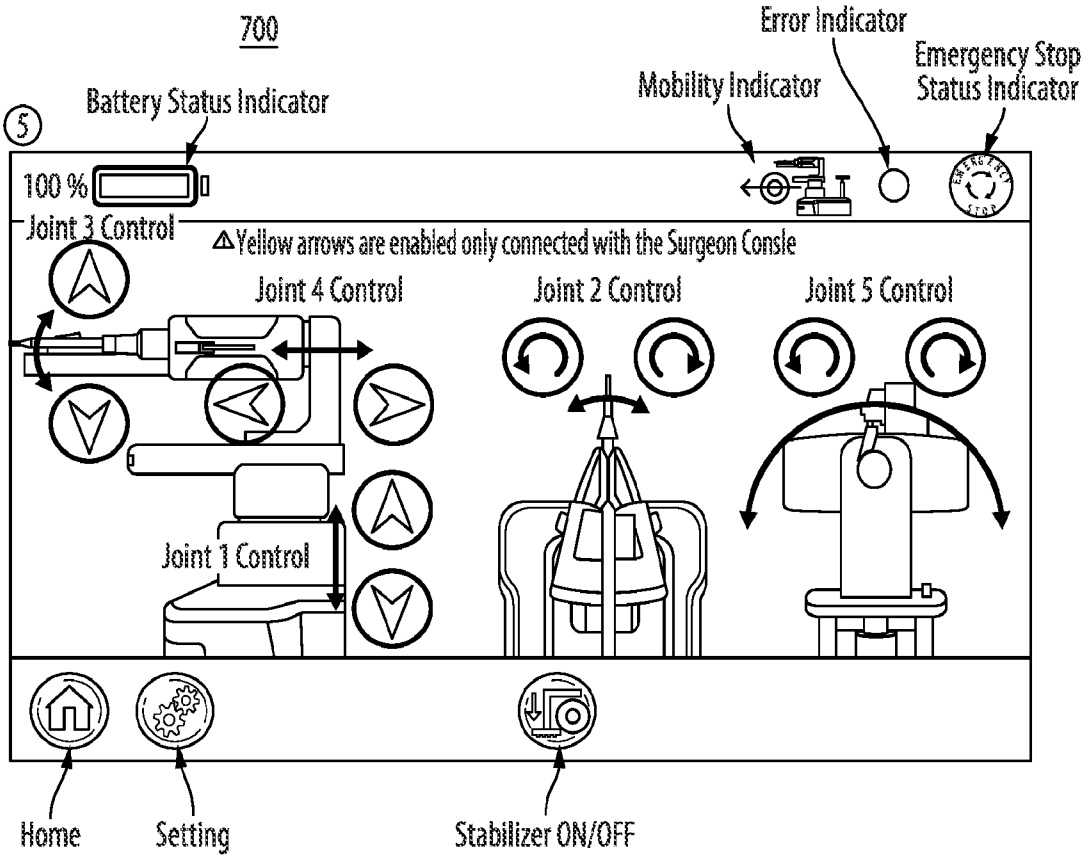

Fig. 7

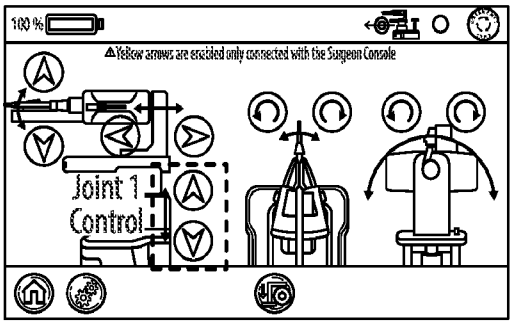

Fig. 8A

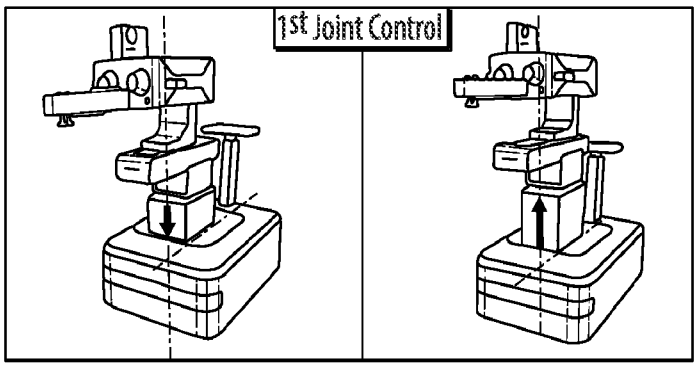

Fig. 8B

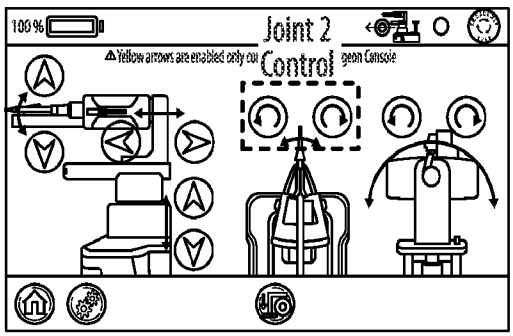

Fig. 9A

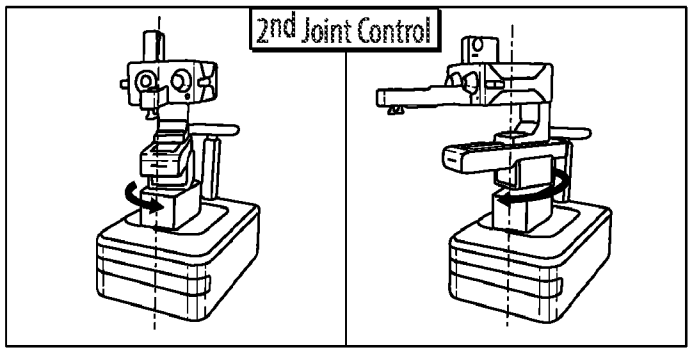

Fig. 9B

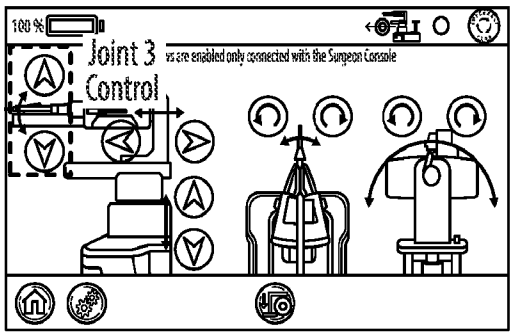

Fig. 10A

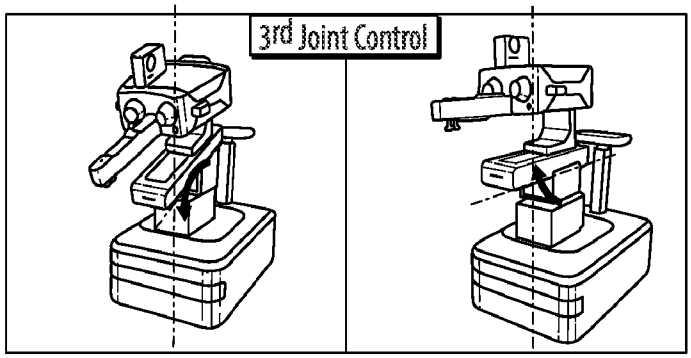

Fig. 10B

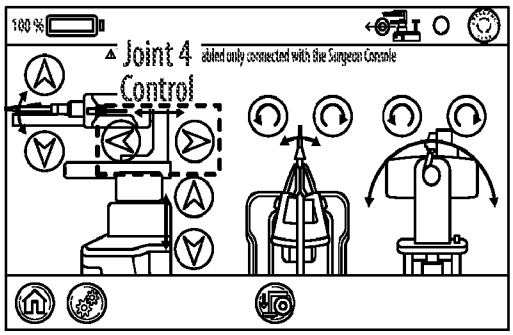

Fig. 11A

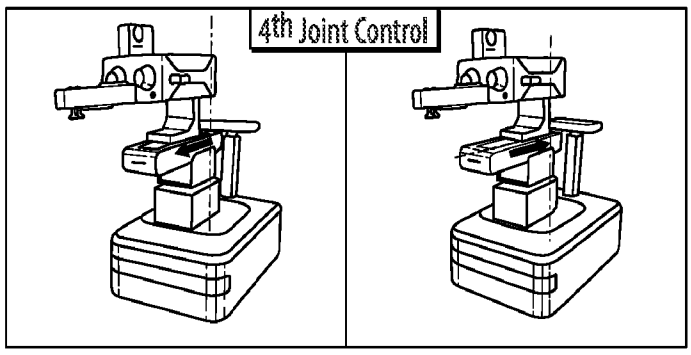

Fig. 11B

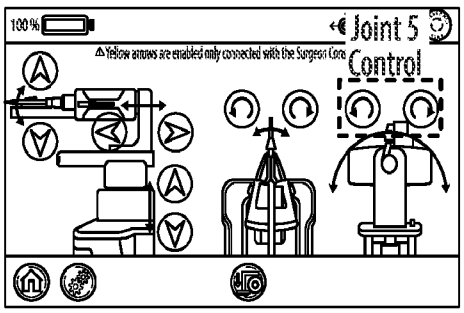

Fig. 12A

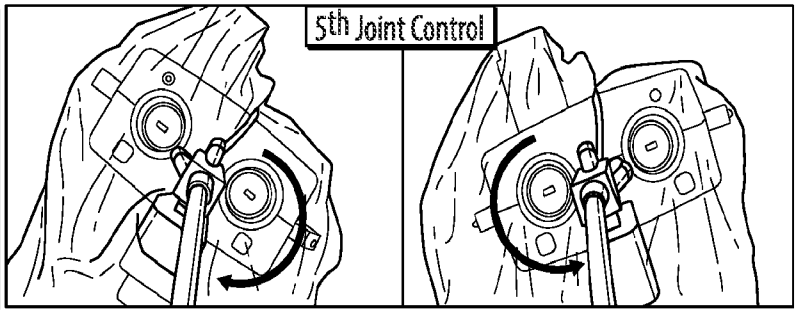

Fig. 12B

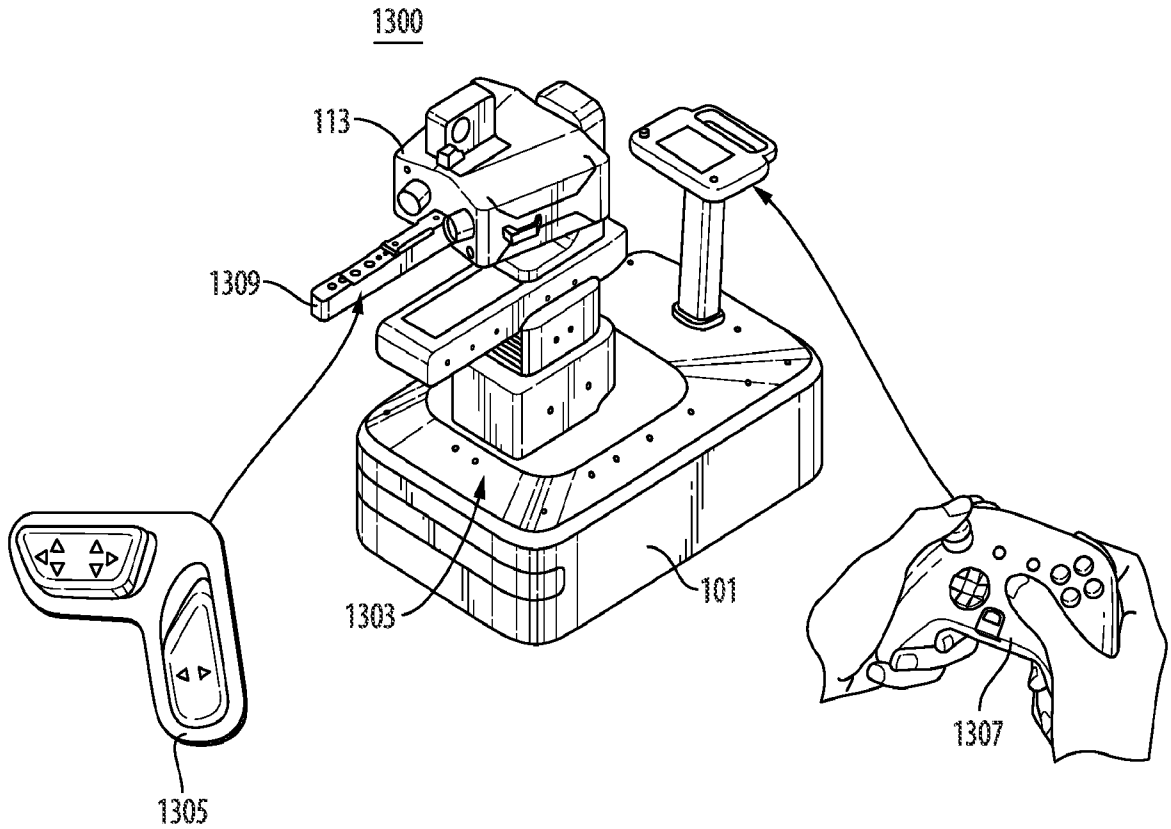

Fig. 13A

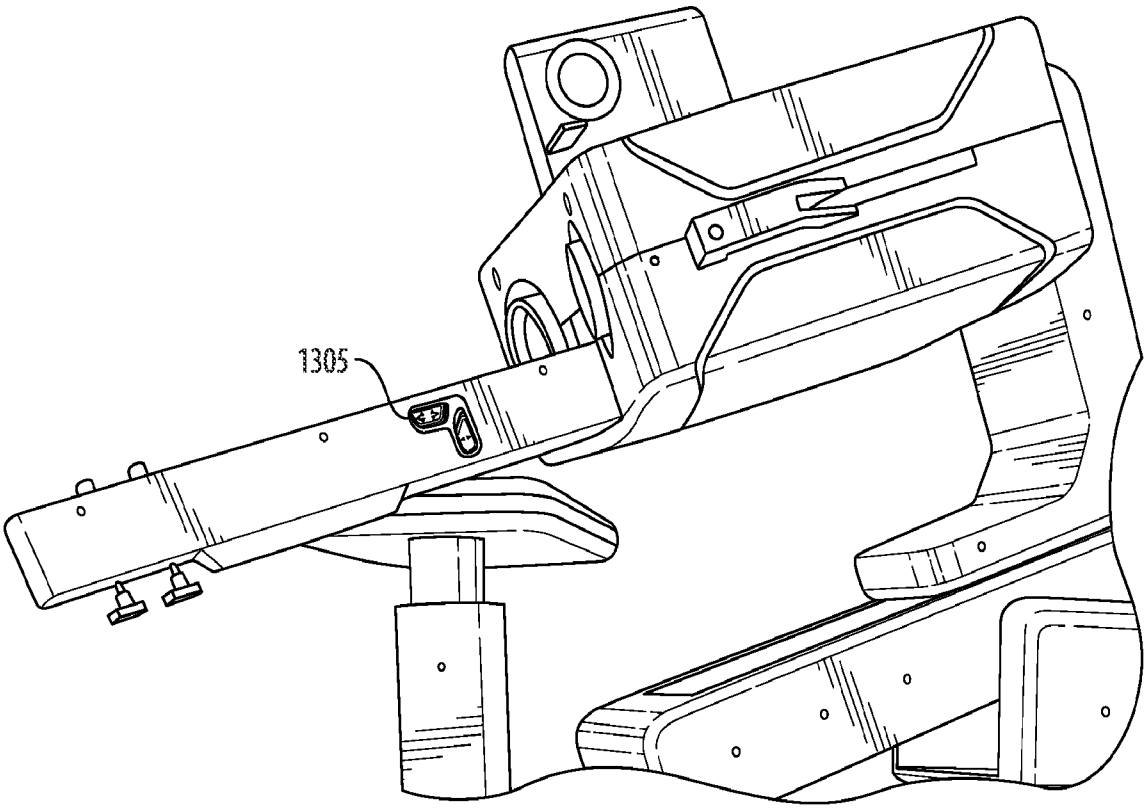

Fig. 13B

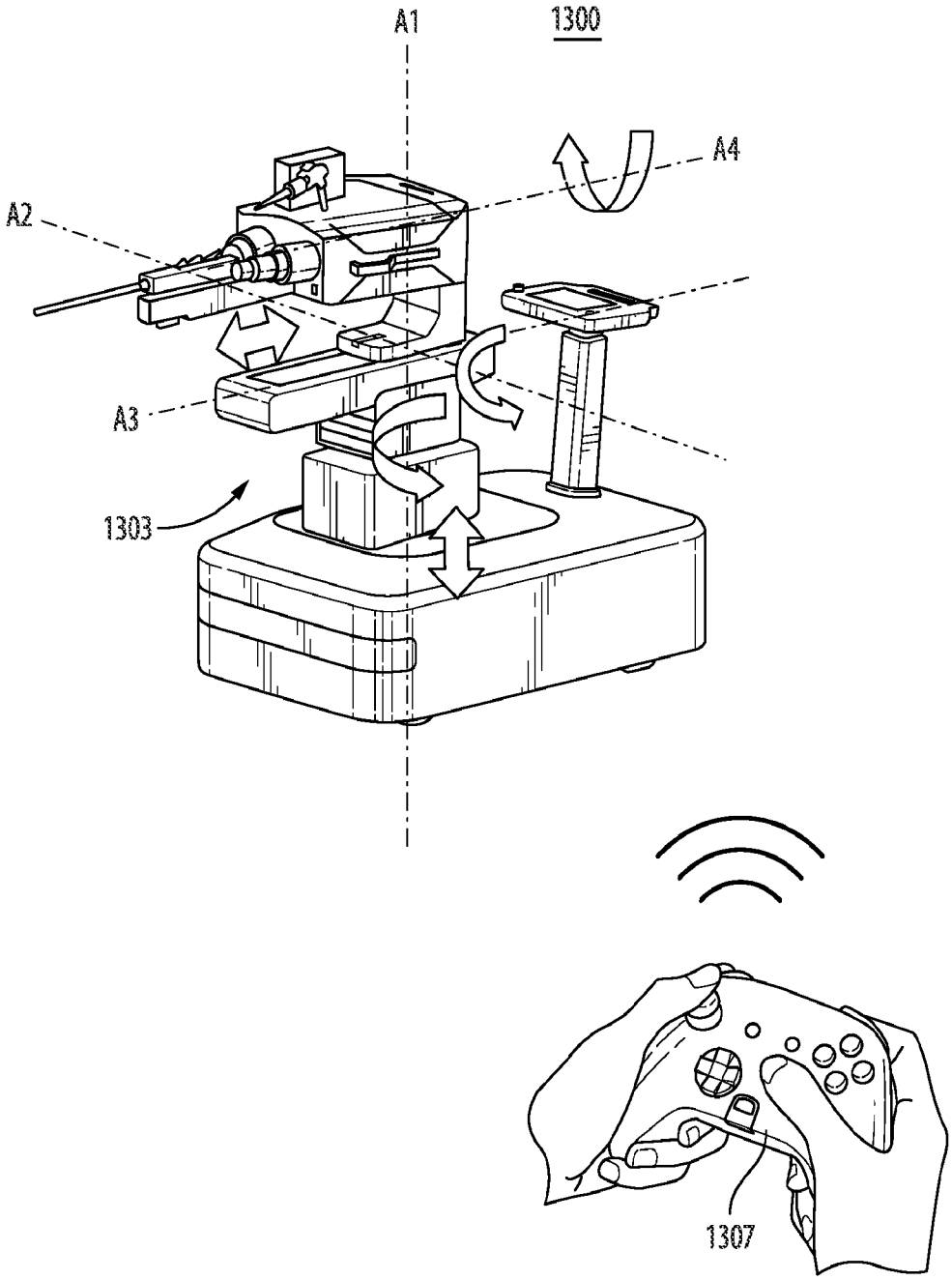

Fig. 13C

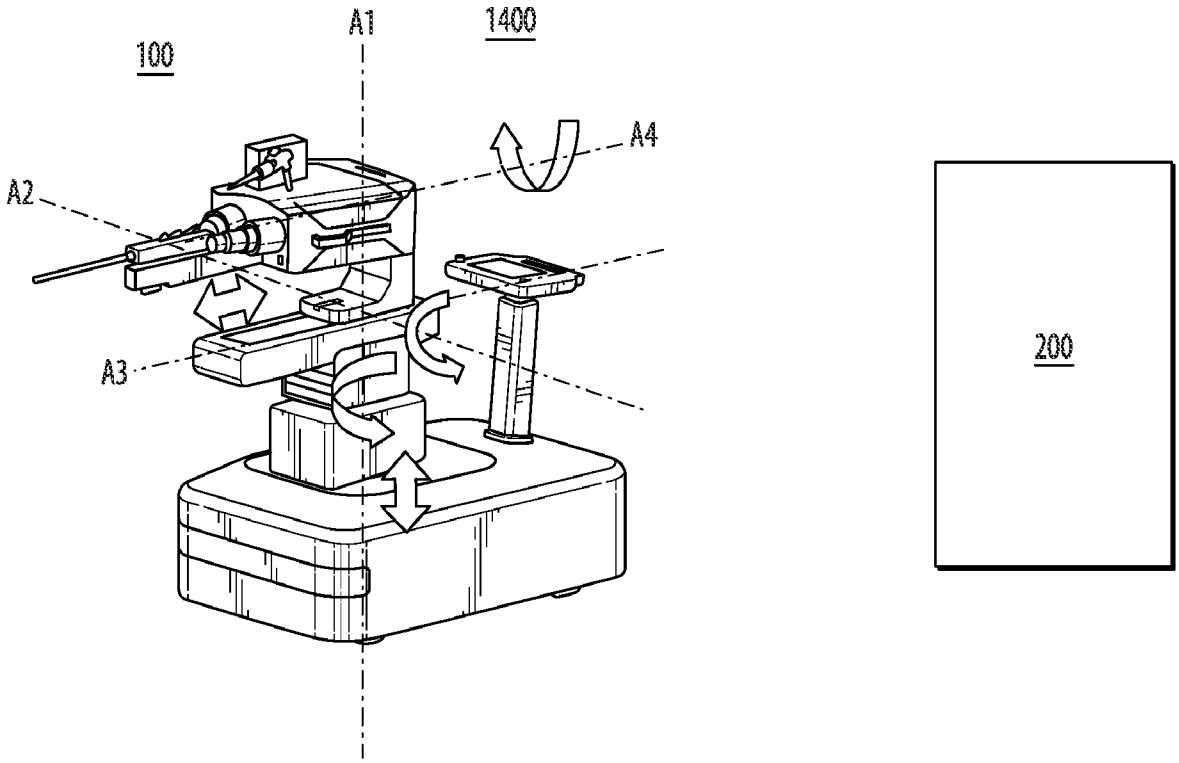

Fig. 14

INTERNATIONAL SEARCH REPORT

International application No.
PCT/US2022/051225

A. CLASSIFICATION OF SUBJECT MATTER

A61B 34/35(2016.01)i; **A61B 34/00**(2016.01)i; **B25J 9/16**(2006.01)i

According to International Patent Classification (IPC) or to both national classification and IPC

B. FIELDS SEARCHED

Minimum documentation searched (classification system followed by classification symbols)

A61B 34/35(2016.01); A61B 19/00(2006.01); A61B 34/30(2016.01); A61B 50/13(2016.01); A61H 39/02(2006.01); A61H 39/04(2006.01); A61N 5/10(2006.01); B25J 5/00(2006.01); B62B 3/00(2006.01)

Documentation searched other than minimum documentation to the extent that such documents are included in the fields searched

Korean utility models and applications for utility models
Japanese utility models and applications for utility models

Electronic data base consulted during the international search (name of data base and, where practicable, search terms used)

eKOMPASS(KIPO internal) & Keywords: robotic surgical system, patient console, positioning assembly, instrument controlle r assembly, remote control device, direct line-of-sight

C. DOCUMENTS CONSIDERED TO BE RELEVANT

Category*	Citation of document, with indication, where appropriate, of the relevant passages	Relevant to claim No.
X	US 2020-0179067 A1 (MAKO SURGICAL CORP.) 11 June 2020 (2020-06-11) paragraphs [0033]-[0037]; figures 1-3	1-23
A	JP 2020-104843 A (KAWASAKI HEAVY IND. LTD. et al.) 09 July 2020 (2020-07-09) the whole document	1-23
A	US 2019-0314645 A1 (BEST THERATRONICS LTD.) 17 October 2019 (2019-10-17) the whole document	1-23
A	US 2015-0100066 A1 (KB MEDICAL SA) 09 April 2015 (2015-04-09) the whole document	1-23
A	CN 109674647 A (XI AN YI MU DI ELECTRONIC TECHNOLOGY CO., LTD.) 26 April 2019 (2019-04-26) the whole document	1-23

☐ Further documents are listed in the continuation of Box C. ☑ See patent family annex.

* Special categories of cited documents:
"A" document defining the general state of the art which is not considered to be of particular relevance
"D" document cited by the applicant in the international application
"E" earlier application or patent but published on or after the international filing date
"L" document which may throw doubts on priority claim(s) or which is cited to establish the publication date of another citation or other special reason (as specified)
"O" document referring to an oral disclosure, use, exhibition or other means
"P" document published prior to the international filing date but later than the priority date claimed
"T" later document published after the international filing date or priority date and not in conflict with the application but cited to understand the principle or theory underlying the invention
"X" document of particular relevance; the claimed invention cannot be considered novel or cannot be considered to involve an inventive step when the document is taken alone
"Y" document of particular relevance; the claimed invention cannot be considered to involve an inventive step when the document is combined with one or more other such documents, such combination being obvious to a person skilled in the art
"&" document member of the same patent family

Date of the actual completion of the international search	Date of mailing of the international search report
07 April 2023	**07 April 2023**

Name and mailing address of the ISA/KR	Authorized officer
Korean Intellectual Property Office **189 Cheongsa-ro, Seo-gu, Daejeon** **35208, Republic of Korea**	**HEO, Joo Hyung**
Facsimile No. **+82-42-481-8578**	Telephone No. **+82-42-481-5373**

INTERNATIONAL SEARCH REPORT
Information on patent family members

International application No.
PCT/US2022/051225

Patent document cited in search report	Publication date (day/month/year)	Patent family member(s)	Publication date (day/month/year)
US 2020-0179067 A1	11 June 2020	AU 2016-315447 A1	22 March 2018
		AU 2016-315447 B2	01 October 2020
		AU 2016-318099 A1	22 March 2018
		AU 2016-318099 B2	24 December 2020
		AU 2020-286163 A1	07 January 2021
		AU 2020-286163 B2	21 July 2022
		AU 2022-211868 A1	01 September 2022
		CN 107920799 A	17 April 2018
		CN 107920799 B	15 June 2021
		CN 108024786 A	11 May 2018
		CN 108024786 B	26 January 2021
		CN 112545655 A	26 March 2021
		EP 3344144 A1	11 July 2018
		EP 3344145 A1	11 July 2018
		JP 2018-527086 A	20 September 2018
		JP 2018-531651 A	01 November 2018
		JP 2021-102089 A	15 July 2021
		JP 6861700 B2	21 April 2021
		JP 6902023 B2	14 July 2021
		KR 10-2018-0048925 A	10 May 2018
		KR 10-2018-0050343 A	14 May 2018
		KR 10-2022-0041933 A	01 April 2022
		KR 10-2348635 B1	06 January 2022
		KR 10-2375911 B1	16 March 2022
		US 10231792 B2	19 March 2019
		US 10603119 B2	31 March 2020
		US 11278363 B2	22 March 2022
		US 2017-0065354 A1	09 March 2017
		US 2017-0065355 A1	09 March 2017
		US 2022-0160442 A1	26 May 2022
		WO 2017-040988 A1	09 March 2017
		WO 2017-041015 A1	09 March 2017
JP 2020-104843 A	09 July 2020	JP 6865808 B2	28 April 2021
		US 2020-0214774 A1	09 July 2020
US 2019-0314645 A1	17 October 2019	CA 3040370 A1	17 October 2019
		EP 3781260 A1	24 February 2021
		US 11524181 B2	13 December 2022
		WO 2019-200471 A1	24 October 2019
US 2015-0100066 A1	09 April 2015	EP 3054887 A1	17 August 2016
		US 10813704 B2	27 October 2020
		US 11172997 B2	16 November 2021
		US 2016-0081754 A1	24 March 2016
		US 2018-0008358 A1	11 January 2018
		US 2018-0021096 A1	25 January 2018
		US 2021-0015565 A1	21 January 2021
		US 2022-0031411 A1	03 February 2022
		US 9283048 B2	15 March 2016
		WO 2015-049109 A1	09 April 2015
CN 109674647 A	26 April 2019	None	