July 5, 1938. C. A. FLOOD 2,122,412

TAG REMARKER

Filed Feb. 15, 1937 2 Sheets-Sheet 1

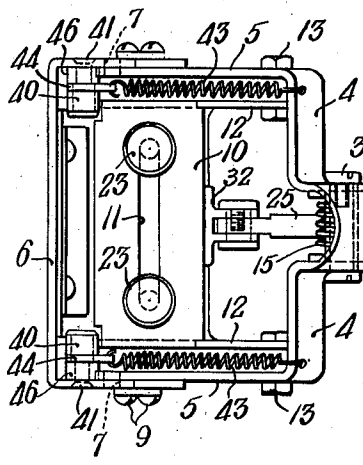

Fig. 1

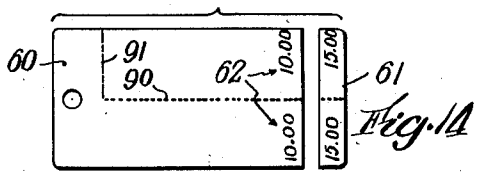

Fig. 1A

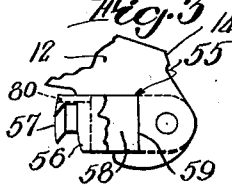

Fig. 3

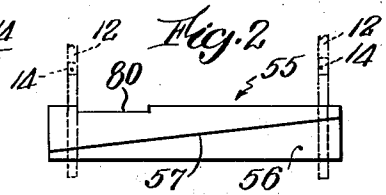

Fig. 2

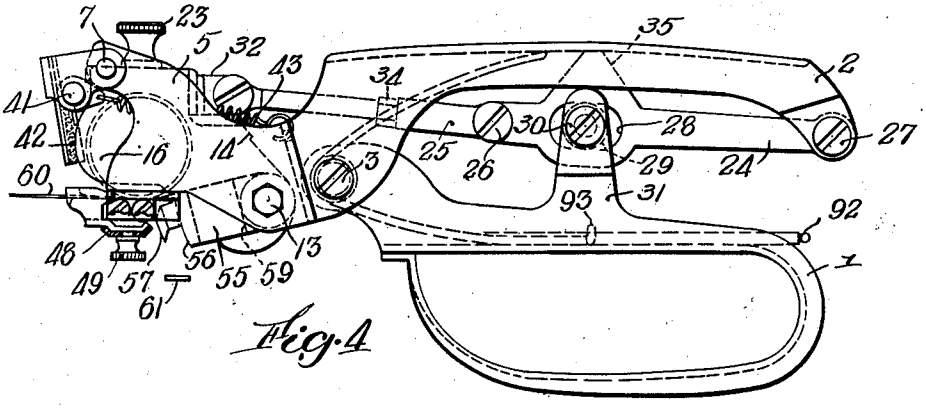

Fig. 4

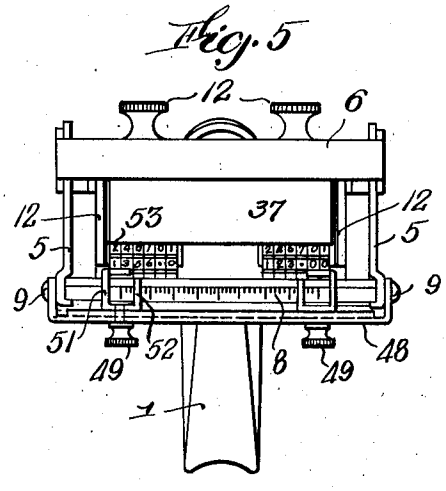

Fig. 5

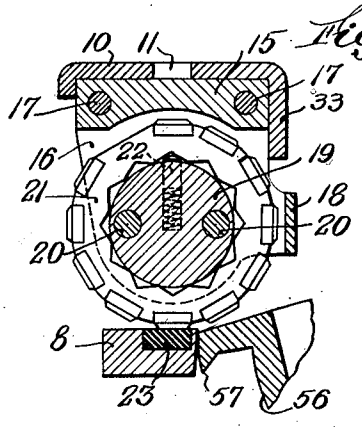

Fig. 6

Inventor:
Carl A. Flood
by Roberts, Cushman & Woodbury.
his Attys.

July 5, 1938. C. A. FLOOD 2,122,412

TAG REMARKER

Filed Feb. 15, 1937 2 Sheets-Sheet 2

Fig. 7

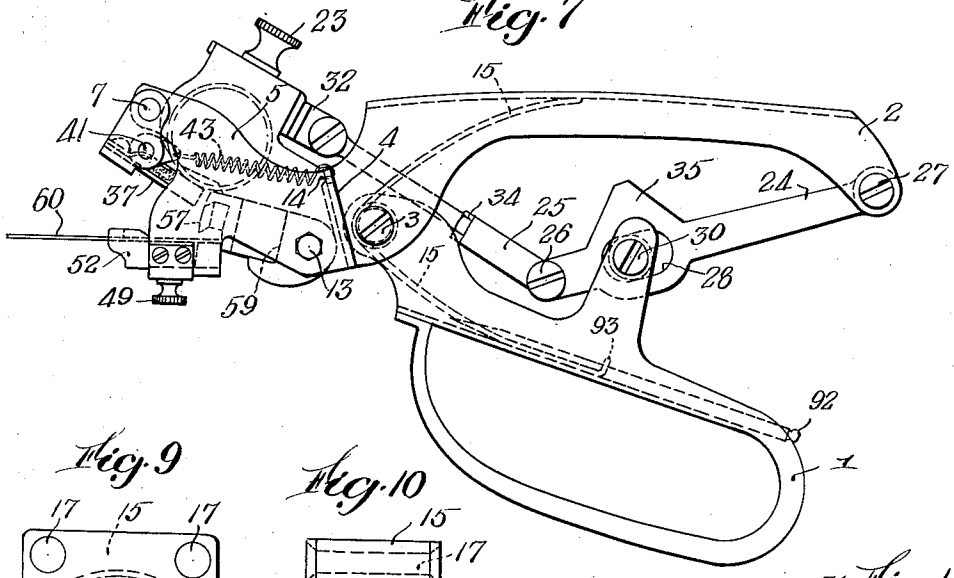

Fig. 9

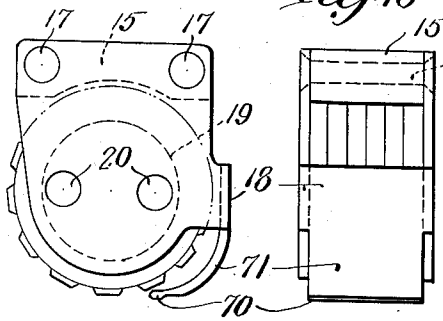

Fig. 10

Fig. 13

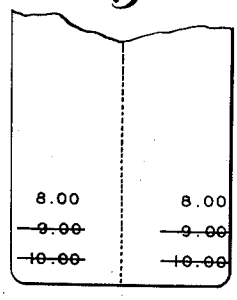

Fig. 11

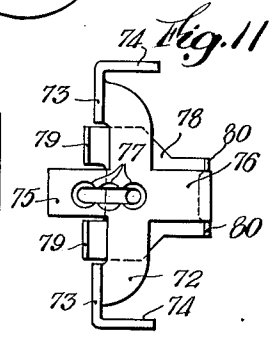

Fig. 8

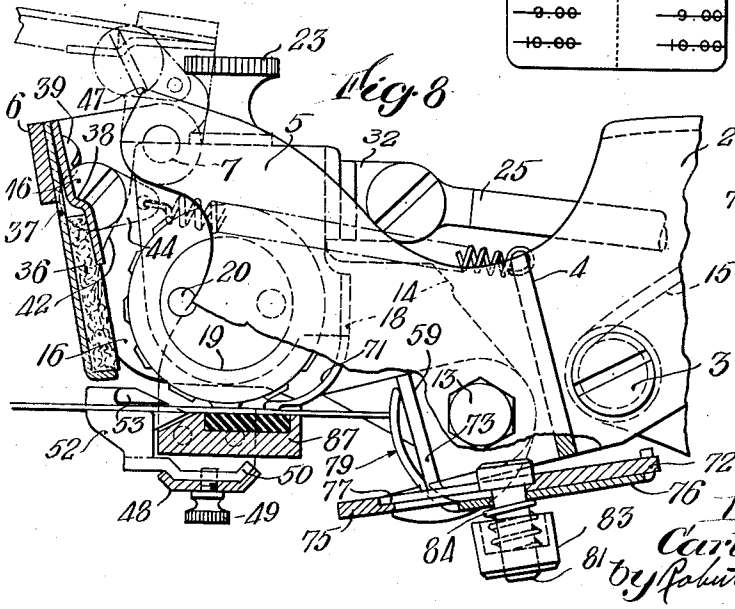

Fig. 12

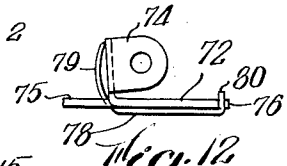

Inventor:
Carl A. Flood,
by Roberts, Cushman & Woodberry,
his Attys.

Patented July 5, 1938 2,122,412

UNITED STATES PATENT OFFICE

2,122,412

TAG REMARKER

Carl A. Flood, Framingham, Mass., assignor to Dennison Manufacturing Company, Framingham, Mass., a corporation of Massachusetts

Application February 15, 1937, Serial No. 125,787

18 Claims. (Cl. 101—90)

This invention relates to devices for printing tags, such as price tickets and other articles in sheet form, and more particularly to devices of the portable type disclosed in my Patent No. 2,014,727 granted September 17, 1935. The objects of the present invention are similar to those set forth in the aforesaid patent and also to improve the construction and operation of devices of this kind, particularly to accommodate tags of different widths, to print at any desired location transversely of the tag, quickly and conveniently to adjust the position of the tags transversely of the printing head, to print simultaneously on two portions of a tag, quickly and conveniently to change the position of the two printings relatively to each other, to accommodate printing heads of different kinds, to remove and interchange printing heads with facility, readily to reset the type in the printing head or heads without removing the heads from their holder or shifting their position in their holder and to secure a greater printing pressure in response to the application of a given manual force.

For the purpose of illustration typical embodiments of the invention are shown in the accompanying drawings in which

Fig. 1 is a top plan view of one embodiment;

Fig. 2 is a front view of the cutter;

Fig. 3 is an end view of the cutter;

Fig. 4 is a side view of the device in printing position, with a portion shown in section;

Fig. 5 is a front view of the device in printing position;

Fig. 6 is a longitudinal vertical section through the printing head and holder, also showing the platen and the cutter;

Fig. 7 is a side view similar to Fig. 4 showing the parts in non-printing open position;

Fig. 8 is an enlarged side elevation, with parts in section, of a modification, in printing position;

Fig. 9 is a side elevation of the printing head for the modified device shown in Fig. 8;

Fig. 10 is a rear elevation of the modified printing head;

Fig. 11 is a top plan view of the tag stop for the modified device;

Fig. 12 is an end elevation of the modified tag stop;

Fig. 13 shows a ticket which has been remarked by the modified device shown in Figs. 8 to 12; and

Fig. 14 shows a tag which has been remarked with the device shown in Figs. 1 to 7.

The particular embodiment of the invention shown in Figs. 1 to 7 comprises two sheet metal handle portions 1 and 2 pivoted together at 3. In advance of the pivot 3 the handle 2 has portions 4 bent outwardly at right angles and portions 5 bent forwardly at right angles. The inking pad holder 6 is pivotally mounted at 7 on the upper forward ends of the portions 5 and the platen holder 8, carrying rubber platen 23, is mounted on the lower forward ends of the portions 5 by means of screws 9, the portions 5 being bent to provide recesses for the ends of the platen holder 8 as shown in Fig. 5.

The printing-head holder 10 comprises a U-shaped sheet metal part having an upper bridge portion provided with a slot 11 and depending legs 12 pivotally mounted on the portions 5 at 13. As shown at 14 in Figs. 3, 7 and 8 the legs 12 have shoulders at their upper rear edges to seat against the forward faces of the portions 4 of the handle 2 to limit the opening movement of the handles in response to the spring 15.

Each of the printing heads carried by the holder 10 comprises a U-shaped frame composed of a top bridge piece 15 and end legs 16 secured to the top piece 15 by rivets 17, the legs 16 being interconnected by integral portions 18 (Fig. 6). The cylindrical core 19 of each printing head spans the space between the legs 16 and is secured thereto by taper-pins 20. The type rings 21 rotate around the core 19 and are held in adjusted position by spring pressed-plungers 22 seating in notches in the inner periphery of the rings. The printing heads are mounted on the holder 10 by means of screws 23 which extend through the slot 11 and thread into the top 15 of the printing head. By loosening the screws 23 the printing heads may be adjusted transversely of the device along the slot 11.

The printing heads are moved toward and from the platen 23 by means of toggle mechanism including two links 24 and 25 pivoted together at 26. The rear end of link 24 is pivoted to the rear end of the handle 2 at 27 and near its forward end the link 24 is provided with a slot 28 to receive a roller 29 carried by a bolt 30 extending through upstanding ears 31 on opposite sides of the handle 1. The forward end of the link 25 is pivotally attached to the printing-head holder 10 by means of a bracket 32 secured to a depending flange 33 at the rear of the printing holder. The link 25 comprises a forward portion threading into a rearward portion to adjust the length of the link, with a lock-nut 34 (Figs. 4 and 7) to hold the parts tightly together. The rear link 24 is provided with a protuberance 35 which seats against the inner face of the handle 2 to limit the movement of the handles 1 and 2 toward each other.

As shown in Fig. 8 the inking pad 36 is carried on the holder 6 by means of two sheet metal plates 37 and 38 between which the pad is clamped by means of screws 39. In the normal use of the device the inking pad swings from the inking position shown in Fig. 7 to the retracted

position shown in Figs. 4 and 8. To swing the pad to retracted position as the handles 1 and 2 move together the holder 6 is provided with rollers 40 journaled on pins 41 extending inwardly from the sides of the holder, the rollers 40 bearing on the curved forward edges 42 of the legs 16 of the printing holder 10. Thus the edges 42 serve as cams to throw the inking pad to retracted position as the printing head moves toward the platen, the rollers 40 being held against the cam edges by means of springs 43 which are connected at their forward ends to the pins 41 by means of links 44 and which are anchored at their rearward ends to the portions 4 of the handle 2. To permit access to the printing wheels for resetting the type the inking pad may be swung from the full-line position to the dotted-line position (Fig. 8), and in so swinging the pad holder the springs 43 pass dead-center position so as to retain the pad holder in elevated position. The upward movement of the pad holder is limited by sleeves 46 on pins 41, these sleeves engaging the forward upper edges of the handle portions 5 as indicated at 47 in Fig. 8.

The tag guiding means comprises a U-shaped member 48 which straddles the side pieces 5 and is held thereto by the same screws 9 which retain the platen holder 8 in position. As shown in Figs. 4 and 8 the cross-bar 48 has its forward and rearward edges bent upwardly somewhat to provide a shallow channel on its upper side. It is also provided with longitudinal slots to receive the screws 49. Each of the guides for guiding the tag into printing position comprises a bottom portion 50 shaped to fit into the channel-shaped part 48 (Fig. 8) and having a threaded opening to receive the screw 49. Extending upwardly from the forward end of the bottom 50 are outer and inner side parts 51 and 52. The inner part 52 extends upwardly to the level of the upper surface of the platen holder 8 so that its upper edge constitutes a guide for the lower surface of the tag. The outer part 51 extends above the level of the tag and has an inturned top portion 53 which serves as a guide for the upper surface of the tag. As shown in Fig. 8 the inturned upper guide 53 preferably does not extend forwardly (to the left of Fig. 8) as far as does the upper surface of the lower guide 52, to facilitate the insertion of the tag. The upstanding outer parts 51 of the guides not only serve to carry the top guides 53 but they also serve to restrict lateral movement of the tag by engagement with the lateral edges of the tag. By loosening the screws 49 the guides may be adjusted lengthwise of the bar 48, the screws 49 sliding in the slots in the bar.

As shown in Figs. 2 and 3 the cutter 55 for severing the end of the tag comprises a U-shaped member having a cross-bar 56 carrying a sloping cutting edge 57 and rearwardly extending end arms 58 for pivotally mounting the cutter on the same pivots 13 which carry the printing-head holder. The legs 12 of the printing-head holder and the arms 58 of the cutter are provided with interengaging shoulders at 59 (Figs. 4 and 8) to interlock the two parts against movement relative to each other, whereby the cutter and the printing-head holder oscillate as a unit about the pivots 13. The portion 56 of the cutter beneath the cutting edge 57 lies in the path of the tag when the parts are in the open position shown in Fig. 7. Thus the portion 56 of the cutter serves as a stop for the tag when the latter is inserted into the device, and in order for the portion 56 to continue to position the tag as the printer moves toward the platen the surface 56 is vertically curved about an axis coincident with the pivots 13 (Fig. 4). The upper surface of the cutter is provided with a recess 30 (Fig. 2) to facilitate removal of the printing heads forwardly over the cutter.

In using the device of Figs. 1 to 7 to remark a tag 60 having two sets of indicia separated by perforations 90 and a score line 91, the tag guides 50—53 are adjusted lengthwise of the bar 48 to the width of the tag and the printing heads are adjusted on the printing-head holder to print at the desired locations on the two sections of the double tag, the tag is then inserted between the guides 50—53 until it engages the surface 56 of the cutter and the handles 1 and 2 are then squeezed together. As the printing head moves toward the platen the end 61 of the tag (carrying the old price mark) is first cut off and then when the printing head reaches the ticket the new price is printed in two locations as shown at 62 in Fig. 14. By virtue of the toggle mechanism 24—25 the first part of the closing movement is rapid and then when the printer reaches the ticket heavy pressure may be applied with slight force as the toggle approaches dead center.

In some cases it is desirable not to cut off the old price mark but instead merely to print a line through it as illustrated in Fig. 13 where the ticket has been remarked twice. To accomplish this result the device is modified as illustrated in Figs. 9 to 12. The cutter shown in Figs. 2 and 3 is removed and each printing-head frame is provided with a line marker 70 (Figs. 9 and 10) on the lower end of a downwardly curved extension 71 integrally connected with the cross-piece 18 of the printing-head frame, the marker 70 being thus positioned to draw a line through the old price mark simultaneously with the application of a new price mark. Thus the previous mark on the tag is invalidated not by cutting off the old mark as in Figs. 1 to 7 but by printing a line across the old mark.

When the cutter is thus removed a tag stop, to limit the insertion of a tag, is substituted for the cutter. As shown in Figs. 8, 11 and 12 this tag stop comprises a frame member including a base plate 72 having lateral portions 73 bent upwardly at right angles and rearwardly extending ears 74 bent rearwardly at right angles from the outer ends of the portions 73. The base plate also has central forward and rearward extensions 75 and 76. The central portion of the plate 72 has a slot with circular counter-bored enlargements 77 extending partially through the plate from the top, one at each end of the slot and one in the middle. Beneath the plate 72 is an auxiliary plate 78 having at its forward end upturned curved lips 79 and at its rearward end short upturned tabs 80 which straddle the rearward extension 76 of the plate 72. The plates 72 and 78 are held together by a bolt 81 having its head seating in one of the enlargements 77 of the slot in plate 72 and having its nut 83 recessed to hold a spring 84 which yieldingly presses the auxiliary plate 78 upwardly against the bottom of the plate 72. The upwardly extending lips 79 are curved as shown in Fig. 8 so as to remain substantially in contact with the forward edge of the tag, without pushing on the tag, as the parts move from open to closed position. By pressing upwardly on the nut 81 the head of the bolt may be shifted from one of the three positions to another, thereby to vary the extent to which a tag may be

inserted into the device. For example, the plate 78, carrying lips 79, may be placed in forward position to remark tags the first time, then shifted to middle position for remarking tags a second time and then shifted to the rear position for remarking tags a third time. The plate 72 is so shaped that the portions 73 seat against the same shoulders 59 of the printer holder as the cutter in the first embodiment.

A stylus 92 may be held in the handle 1 by means of the curved end 93 of the spring 15 (Figs. 4 and 7) for resetting the type wheels. To reset the wheels the ink-pad holder is swung up to the dotted-line position shown in Fig. 8 to give ready access to the wheels without removing the printing units from the device.

It should be understood that the present disclosure is for the purpose of illustration only and that this invention includes all modifications and equivalents which fall within the scope of the appended claims.

I claim:

1. A device for marking tags comprising a pair of holders kinematically interconnected for relative movement toward and from each other with a space therebetween to receive a tag, a printer and a platen disposed on said holders respectively on opposite sides of said space, and a transversely adjustable guide for engagement with the top, bottom and edge of a tag to guide the tag into printing position.

2. A device for marking tags comprising a pair of holders kinematically interconnected for relative movement toward and from each other with a space therebetween to receive a tag, a printer and a platen disposed on said holders on opposite sides of said space respectively, and a U-shaped tag guide having a short leg for engagement with one side of the tag and a long leg for engagement with the edge and other side of the tag.

3. A device for marking tags comprising a pair of holders kinematically interconnected for relative movement toward and from each other with a space therebetween to receive a tag, a printer and a platen disposed on said holders respectively on opposite sides of said space, a pair of handles pivoted together, and toggle means comprising two links pivoted together and to said handles and one of said holders.

4. A device for marking tags comprising a pair of holders pivotally interconnected for relative movement toward and from each other with a space therebetween to receive a tag, a printer and a platen disposed on said holders respectively on opposite sides of said space, a pair of handles pivoted together, one of said handles being fast to one of said holders, and toggle mechanism for kinematically interconnecting the other handle with the other holder.

5. A device for marking tags comprising a pair of holders kinematically interconnected for relative movement toward and from each other with a space therebetween to receive a tag, a printer and a platen disposed on said holders respectively on opposite sides of said space, a pair of handles kinematically interconnected with said holders, means movably mounted on one holder for inking the printer and a cam on the other holder for moving said means when the handles are moved relatively to each other.

6. A device for marking tags comprising a pair of holders kinematically interconnected for relative movement toward and from each other with a space therebetween to receive a tag, a printer and a platen disposed on said holders respectively on opposite sides of said space, inking means pivoted on the platen holder, a spring urging said means toward said printer, and a cam on the printer holder counteracting the spring, said means being movable about its pivot past a dead-center position beyond which the spring holds it in inactive retracted position.

7. A device for marking tags comprising a pair of holders kinematically interconnected for relative movement about a pivotal axis toward and from each other with a space therebetween to receive a tag, a printer and a platen disposed on said holders respectively on opposite sides of said space, and a cutter attached to one of said holders for arcuate movement about said axis for severing the end of a tag, the cutter having a stop surface concentric with said axis for positioning a tag while the cutter advances toward the tag.

8. A device for marking tags comprising a pair of holders kinematically interconnected for relative movement about a pivotal axis toward and from each other with a space therebetween to receive a tag, a printer and a platen disposed on said holders respectively on opposite sides of said space, and a tag stop attached to one of said holders for arcuate movement about said axis.

9. A hand device for remarking a tag comprising a pair of handles movable toward and from each other about a pivotal axis, holding means fast to the forward end of one handle and projecting laterally therefrom, printer and platen parts disposed on said means, one of said parts being fast to said holding means and the other of said parts being movable relatively to the holding means, invalidating means behind said platen part for rendering ineffective a previous mark on the tag, means behind said invalidating means for determining the path of the movable part relatively to the holding means, and actuating means associated with said movable part and said other handle for impelling the movable part toward said other part when the handles are squeezed together.

10. A hand device for remarking a tag comprising a pair of handles movable toward and from each other about a pivotal axis, holding means fast to the forward end of one handle and projecting laterally therefrom, printer and platen parts disposed on said means, one of said parts being fast to said holding means and the other of said parts being movable relatively to the holding means, means for adjustably mounting the printer part on said holding means in various positions lengthwise of the platen part, invalidating means behind said platen part for rendering ineffective a previous mark on the tag, means behind said invalidating means for determining the path of the movable part relatively to the holding means, and actuating means associated with said movable part and said other handle for impelling the movable part toward said other part when the handles are squeezed together.

11. A hand device for remarking a tag comprising a pair of handles movable toward and from each other about a pivotal axis, holding means fast to the forward end of one handle and projecting laterally therefrom, printer and platen parts disposed on said means, one of said parts being fast to said holding means and the other of said parts being movable relatively to the holding means, guide means for guiding a tag into the device, the printer part and guide means being correspondingly adjustable lengthwise of the platen part, invalidating means behind said platen part for rendering ineffective a previous

mark on the tag, means behind said invalidating means for determining the path of the movable part relatively to the holding means, and actuating means associated with said movable part and said other handle for impelling the movable part toward said other part when the handles are squeezed together.

12. A hand device for remarking a tag comprising a pair of handles movable toward and from each other about a pivotal axis, holding means fast to the forward end of one handle and projecting laterally therefrom, printer and platen parts disposed on said means, one of said parts being fast to said holding means and the other of said parts being movable relatively to the holding means, the printer part including a U-shaped holder and a plurality of type wheels mounted between the legs of the holder, means for adjustably mounting the base of the U-shaped holder on the holding means, invalidating means behind said platen part for rendering ineffective a previous mark on the tag, means behind said invalidating means for determining the path of the movable part relatively to the holding means, and actuating means associated with said movable part and said other handle for impelling the movable part toward said other part when the handles are squeezed together.

13. A hand device for remarking a tag comprising a pair of handles movable toward and from each other about a pivotal axis, holding means fast to the forward end of one handle and projecting laterally therefrom, printer and platen parts disposed on said means, one of said parts being fast to said holding means and the other of said parts being movable relatively to the holding means, the printer including a holder and a plurality of type, the holder and type being removable as a unitary assemblage, invalidating means behind said platen part for rendering ineffective a previous mark on the tag, means behind said invalidating means for determining the path of the movable part relatively to the holding means, and actuating means associated with said movable part and said other handle for impelling the movable part toward said other part when the handles are squeezed together.

14. A hand device for remarking a tag comprising a pair of handles movable toward and from each other about a pivotal axis, holding means fast to the forward end of one handle, printer and platen parts associated with said means, one of said parts being fast to said holding means and the other of said parts being movable relatively to the holding means, invalidating means behind said platen part for rendering ineffective a previous mark on the tag, means behind said invalidating means for determining the path of movement of the movable part relatively to the holding means, and actuating means associated with said movable part and said other handle for impelling the movable part toward said other part when the handles are squeezed together.

15. A hand device for remarking a tag comprising a pair of handles movable toward and from each other about a pivotal axis, holding means fast to the forward end of one handle, printer and platen parts associated with said means, one of said parts being fast to said holding means and the other of said parts being movable relatively to the holding means, means for adjustably mounting the printer part on said holding means in various positions lengthwise of the platen part, invalidating means behind said platen part for rendering ineffective a previous mark on the tag, means behind said invalidating means for determining the path of movement of the movable part relatively to the holding means, and actuating means associated with said movable part and said other handle for impelling the movable part toward said other part when the handles are squeezed together.

16. A hand device for remarking a tag comprising a pair of handles movable toward and from each other about a pivotal axis, holding means fast to the forward end of one handle, printer and platen parts associated with said means, one of said parts being fast to said holding means and the other of said parts being movable relatively to the holding means, guide means for guiding a tag into the device, the printer part and guide means being correspondingly adjustable lengthwise of the platen part, invalidating means behind said platen part for rendering ineffective a previous mark on the tag, means behind said invalidating means for determining the path of movement of the movable part relatively to the holding means, and actuating means associated with said movable part and said other handle for impelling the movable part toward said other part when the handles are squeezed together.

17. A hand device for remarking a tag comprising a pair of handles movable toward and from each other about a pivotal axis, holding means fast to the forward end of one handle, printer and platen parts associated with said means, one of said parts being fast to said holding means and the other of said parts being movable relatively to the holding means, the printer part including a U-shaped holder and a plurality of type wheels mounted between the legs of the holder, means for adjustably mounting the base of the U-shaped holder on the holding means, invalidating means behind said platen part for rendering ineffective a previous mark on the tag, means behind said invalidating means for determining the path of movement of the movable part relatively to the holding means, and actuating means associated with said movable part and said other handle for impelling the movable part toward said other part when the handles are squeezed together.

18. A hand device for remarking a tag comprising a pair of handles movable toward and from each other about a pivotal axis, holding means fast to the forward end of one handle, a printer and a platen associated with said means, the platen being fast to said holding means and the printer being movable relatively to the holding means, the printer including a holder and a plurality of type, the holder and type being removable as a unitary assemblage, invalidating means behind said platen for rendering ineffective a previous mark on the tag, means behind said invalidating means for determining the path of movement of the printer relatively to the holding means, and actuating means associated with said printer and said other handle for impelling the printer toward the platen when the handles are squeezed together.

CARL A. FLOOD.