June 17, 1958 Q. M. BLOOM 2,839,282

FURNACE WORK ADVANCING MECHANISM

Filed Oct. 22, 1953 2 Sheets-Sheet 1

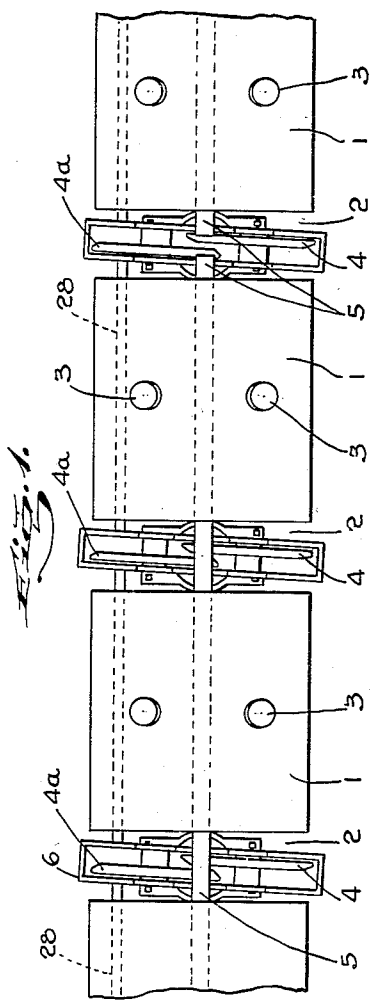

Fig. 1.

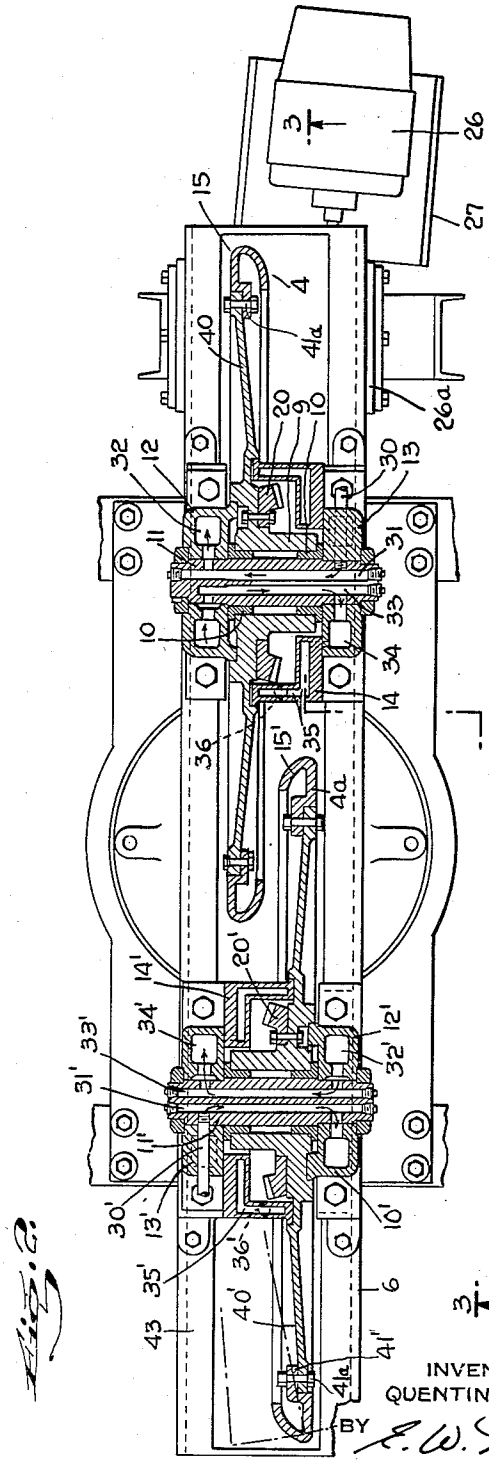

Fig. 2.

INVENTOR
QUENTIN M. BLOOM
BY E. W. Mason
ATTORNEY

June 17, 1958 Q. M. BLOOM 2,839,282

FURNACE WORK ADVANCING MECHANISM

Filed Oct. 22, 1953 2 Sheets-Sheet 2

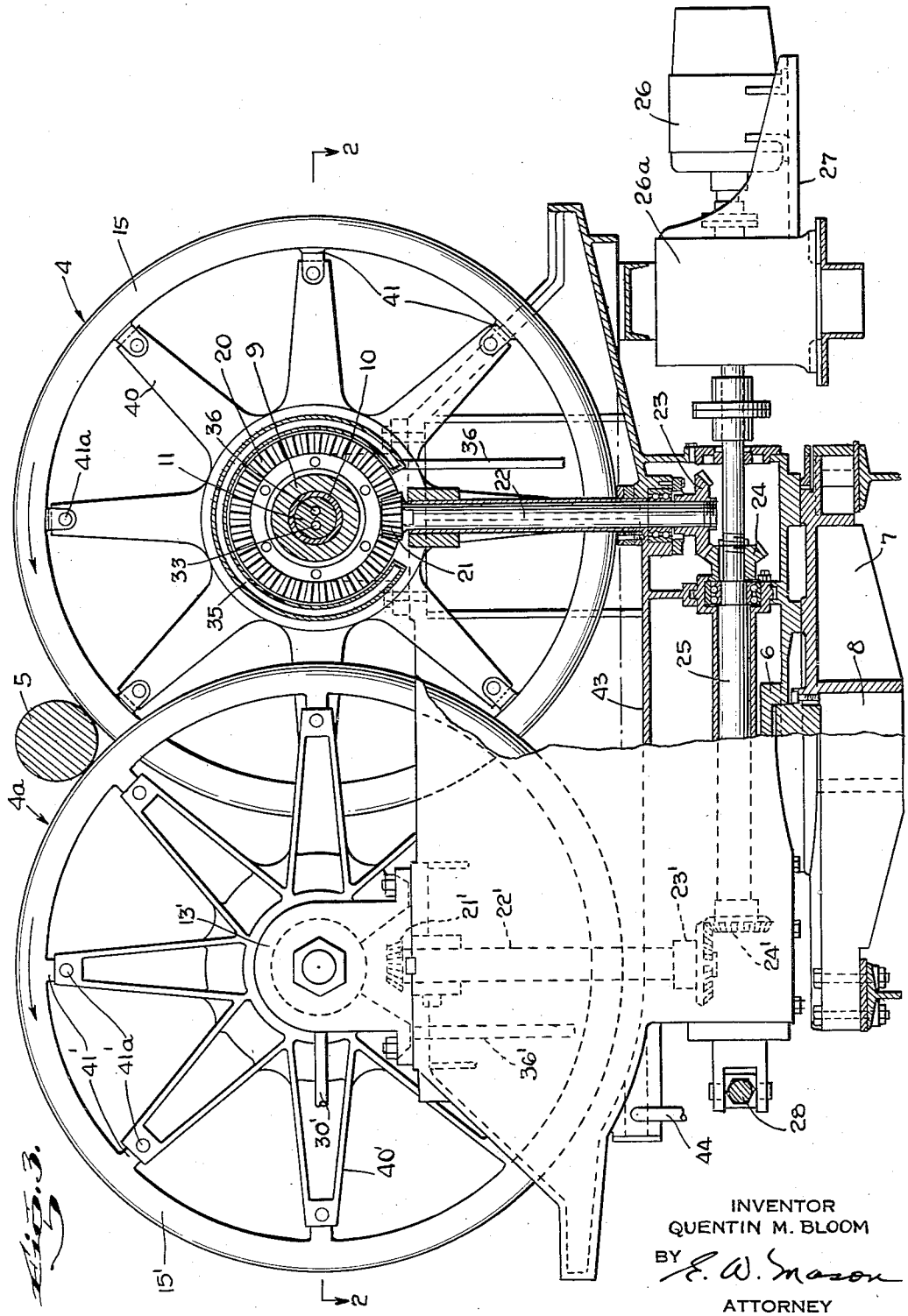

INVENTOR
QUENTIN M. BLOOM
BY E. W. Mason
ATTORNEY

United States Patent Office

2,839,282

Patented June 17, 1958

2,839,282

FURNACE WORK ADVANCING MECHANISM

Quentin M. Bloom, Huntingdon Valley, Pa., assignor to Selas Corporation of America, Philadelphia, Pa., a corporation of Pennsylvania

Application October 22, 1953, Serial No. 387,737

3 Claims. (Cl. 263—3)

The present invention relates to furnace structures of known type for heating elongated metal rods or tubes as they are moved longitudinally through a series of stationary aligned furnace units. An early form of said furnace structure is shown in the Harter Patent 1,946,-971 of February 13, 1934. In the operation of such furnace structures, fluid fuel is burned in the combustion chamber of each furnace unit, and the rod or tube work pieces are progressively advanced through the furnace units. Ordinarily, each work piece is of greater length than the individual furnace units and is advanced by feeding or work advancing mechanisms between the adjacent ends of adjacent furnaces. Heretofore it has been the usual practice to advance the work pieces by transverse conveyor rollers at the ends of the aligned furnace units.

In the practice of the present invention, use is made of work advancing means comprising a pair of overlapping wheels or other roller elements at each end of each furnace unit with the axis of each roller element inclined at a small angle to the axis of the work path. The two overlapping roller elements of each pair rotate in the same direction and rotate each work piece about its own axis as the latter is being moved longitudinally through the furnace units.

In the normal operation of furnace structures of the above mentioned type, gases at relatively high temperature are continuously passed into the spaces between the adjacent ends of adjacent furnace units. A primary object of the present invention is to provide novel and effective cooling means for suitably minimizing the temperatures of the work advancing mechanism. Another major object of the present invention is to provide improved mechanism for rotating the work advancing roller elements.

The various features of novelty which characterize my invention are pointed out with particularity in the claims annexed to and forming a part of this specification. For a better understanding of the invention, however, its advantages, and specific objects attained with its use, reference should be had to the accompanying drawings and descriptive matter in which I have illustrated and described a preferred embodiment of the invention.

Of the drawings:

Fig. 1 is a diagrammatic plan view of a portion of a furnace structure comprising a plurality of aligned furnace sections;

Fig. 2 is a plan view partly in section on the broken line 2—2 of Fig. 3; and

Fig. 3 is a section on the line 3—3 of Fig. 2.

Fig. 1 diagrammatically illustrates a portion of a furnace structure which embodies a desirable form of the present invention. Said furnace structure comprises a plurality of furance units 1 arranged end-to-end. Each pair of adjacent furnace units 1 have their adjacent ends separated by a space 2. Ordinarily, each furnace assembly or structure includes more than the four furnace units shown in Fig. 1, but the number of units in each furnace structure is not an essential feature of the present invention. Fluid fuel is supplied to each unit through one or more burner inlets 3. In normal operation, products of combustion formed in each two adjacent furnace units escape into the space 2 between the units through openings in the end walls of the units.

A pair of associated work advancing elements or wheels 4 and 4a are mounted in each space 2. The axes of each associated pair of elements 4 and 4a are parallel to one another and are located at a level below the work pieces 5 which are moved horizontally through the central portion of the aligned furnace chambers or units 1. As collectively shown in Figs. 2 and 3, each associated pair of wheels 4 and 4a are mounted in a separate, angularly adjustable, supporting frame 6. The latter is journaled on a vertical spindle or axle member 8 mounted on a lower stationary framework 7 which supports the furnace structure.

The wheel 4 includes a hub portion 9 in which a bushing or lining 10 is mounted to revolve with said hub portion around a stationary axle 11. The ends of the bushing 10 associated with each hub portion 9 are between and abut against vertical bracket members 12 and 13. The latter are bolted or otherwise attached to the frame member 6, and support the ends of the associated axle 11. As hereinafter explained, the brackets 12 and 13 assoicated with the axle 11, and a chambered structure 14 normally held in fixed relation to the bracket 13, form parts of a water cooling system by which the axle 11 and associated hub portion 9 of the wheel 4 are suitably cooled. The rim portion 15 of the wheel 4 also forms an important part of the cooling apparatus. As shown, the wheel 4a and parts 10'—15' associated therewith, are counterparts, respectively, of the wheel 4 and parts 10—15. As is plainly shown in the drawings, the wheel 4a and associated parts are reversed relative to the wheel 4 and parts associated with the latter. As shown, the wheels 4 and 4a are respectively adjacent opposite sides of the space 2 in which the two wheels are mounted. The axes of the axles 11 and 11' are parallel to one another. Each axle is shown in Fig. 3 as having its axis parallel to the path of movement of the work pieces 5, but in regular operation, each axle is inclined to the work path axis at an angle which ordinarily is not less than 5° and not greater than 15°. The water passed through the cooling passages in the axles 11 and 11' and parts immediately associated therewith, passes through drain pipes 36 and 36' into cooling engagement with the rim portions of the wheels 4 and 4a, as is hereinafter explained.

The wheel driving or rotating mechanism for each pair of wheels 4 and 4a includes a bevel gear 20 coaxial with the axle 11 and attached to the wheel 4. The gear 20 is engaged and rotated by a small bevel gear 21 carried by the upper end of a vertical shaft 22. The latter is journaled in the associated frame 6, and carries a bevel gear 23 at its lower end. The bevel gear 23 is in mesh with a bevel gear 24. The latter is carried by one end of a horizontal shaft 25 journaled in the associated frame 6. At its opposite end, the shaft 25 carries a bevel gear 24', which is in mesh with a bevel gear 23' supported by the lower end of a vertical shaft 22'. At its upper end, the shaft 22' supports a bevel gear 21' which meshes with a gear 20' coaxial with the axle 11' and wheel 4a and secured to the latter. As shown, the parts 20'— 24' are counterparts, respectively of the parts 20—24.

As shown in Fig. 2, the gears 20 and 20' face in opposite directions, as do other counterpart portions of the

wheels 4 and 4a. The gears 24 and 24' secured to the opposite ends of the shaft 25, also face in opposite directions. In consequence, the vertical shafts 22 and 22' rotate in opopsite directions about their respective axes. As will be apparent, however, the rotation of the gears 20 and 20' in opposite directions, causes the wheels 4 and 4a to rotate in the same direction. Thus as seen in Fig. 3, each of the wheels 4 and 4a rotates about its axis in the counterclockwise direction. As shown, the common driving shaft 25 for each pair of wheels 4 and 4a is rotated by an individual electric motor 26 connected to the shaft 25 through a speed reducer element 26a. The motor 26 is mounted on an extension 27 of the base portion of the corresponding angularly adjustable frame member 6. The different frames 6 may be removably clamped to the lower frame work 7, but as shown, the frames 6 are kept parallel to one another by links 28, each pivotally connected at its ends to adjacent portions of an adjacent pair of frame members 6.

As previously stated, a primary object of the present invention is to provide simple and effective means for subjecting the rotating wheels to a suitable cooling action. In the form of the invention illustrated herein by way of example, the cooling provisions for the wheel 4 comprise a cooling water supply pipe 30 extending through a portion of the bracket 13 and passing water into the corresponding end of a longitudinal passage 31 in the stationary axle 11. The other end of the passage 31 opens into a channel 32 in the bracket 12. The water thus received in the space 32 passes from the latter into a longitudinal channel 33 alongside the channel 31 in the axle 11. The water passes from the channel 33 into a space 34 in the bracket 13. Water passes from the space 34 into a chamber space 35 in the non-rotating structure 14 surrounding and including a portion facing the gear 20. The cooling water thus passing through the cooling channels in the axle 11, and the cooling spaces in the brackets 12 and 13, and chambered structure 14, is discharged through a drain pipe 36. The cooling provisions for the hub portion of the wheel 4a comprises spaces and channels 30'—36' corresponding to the above mentioned spaces and channels 30—36, respectively.

As shown, the wheel 4 is formed with radial spokes 40 having their outer ends attached to the corresponding felly or wheel rim portion 15. In the form illustrated, the rim 15 is formed with projections 41 extending radially inward toward the wheel axis and attached in any suitable manner, to the corresponding spokes 40. As shown, the projections 41 are connected by bolts 41a to the outer ends of the corresponding spokes 40. As is clearly shown in Fig. 2, the rim portion 15 of the wheel 4 comprises an outer portion which is U-shaped in cross section, having convex and concave outer and inner surfaces, respectively. In consequence, the rim 15 forms a trough which may receive water from the drain pipe 36. The rim portion 15' of the wheel 4a may be, and as shown, is a replica of the rim portion 15 of the wheel 4, and is associated with parts 40', 41' and 41'a, respectively similar to the parts 40, 41 and 41a associated with the wheel rim 15.

The water passing downward away from the central portions of each associated pair of wheels 4 and 4a through the drain pipes 36 and 36' passes into the trough spaces of the respective wheel rims 15 and 15'. As shown, the lower portions of the rims 15 and 15' turn through a horizontally elongated tank or receptacle 43 which is open at its upper side and forms a lower portion of the member 6. Water overflowing from the lower portions of the trough spaces in the rims 15 and 15', falls into the tank 43 and passes away from the latter through a drain pipe 44. As shown in Fig. 3, the normal water level in the tank 43 is fixed by the drain pipe 44 and is normally below the lowermost portions of the rims 15 and 15'. Thus water in the tank 43 does not contact the wheels 4 and 4a and oppose the movements of the latter or subject the wheel rims 15 and 15' to a cooling action varying with the height of water level in the tank.

In operation, the normal rotative speed of the wheels 4 and 4a will be high enough to continuously keep a pool of water in the rims 15 and 15' all or a portion of the way around the respective axles 11 and 11', though there will be some spillage of water into the tank 43 from the lower portion of each wheel rim. The centrifugal force action tending to keep the water in rim troughs 15 and 15' is substantial since the minimum diameter of each rim portion may well be little less than 6 feet, and each wheel rim may well have a rotative speed of from 1½ to 13 revolutions per minute. The wheel rim cooling provisions and the provisions for cooling the wheel driving mechanisms are relatively simple and effective and constitute useful and practically desirable advances in furnaces of the general type illustrated.

Substantial variations in the linear speed of the work pieces 5 may be effected by the angular adjustment of the member 6 between the positions in which that member is inclined at an angle of 5° and at an angle of 15° from a plane transverse to the longitudinal movement of the work pieces. In practice, the longitudinal speed of the work pieces may well be adjustable from about 3 feet to about 18 feet per minute. As will be apparent, the temperature to which the work is heated can be regulated not only by regulating the rate at which fluid fuel is passed into the furnace units through the inlets 3, but also without change in the fuel supply rate by varying the speed with which the work pieces are longitudinally advanced. The continuous rotation of the work insures uniform work heating. The ready variation which can be effected in the speed at which the work is advanced, permits an easy and accurate control of the temperature to which the work is heated. Variations in work speed regulate the temperature to which work of a given size may be heated, and makes it possible to heat work pieces of different sizes to different desired temperatures.

The mechanism provided for rotating this pair of wheels 4 and 4a is relatively simple, and is well adapted for use with the speed of rotation of each pair of wheels directly controlled by regulating the speed of an electric motor 26 individual to said pair of wheels and supported by the member 6 on which said pair of wheels is mounted.

While in accordance with the provisions of the statutes, I have illustrated and described the best form of embodiment of my invention now known to me, it will be apparent to those skilled in the art that changes may be made in the form of the apparatus disclosed without departing from the spirit of my invention as set forth in the appended claims and that in some cases certain features of my invention may be used to advantage without a corresponding use of other features.

What is claimed is:

1. Improved means for advancing and rotating elongated, cylindrical work pieces in end-to-end relation comprising a pair of wheels rotating about an axis inclined at an angle to said end-to-end work pieces said wheels being displaced radially a distance so that their peripheries overlap to form a work supporting portion, each wheel having a rim portion successively engaging the under side of the work pieces moving past said wheels and formed at its periphery with a circumferential trough having its opening facing radially inwardly with its side portions connected at the periphery of the wheel and having spaced apart inner edges, means for rotating said wheels with an angular velocity sufficient to maintain a body of water in at least a portion of said troughs, and means for continuously passing cooling water into said troughs and thereby causing water to overflow from said troughs and reduce the extent to which the water in the troughs is heated.

2. Means for advancing elongated, cylindrical work pieces in end-to-end relation in the direction of their common axis, comprising a pair of overlapping wheels with their centers at opposite sides of said axis and arranged to successively engage and support said work pieces and having parallel spaced apart axes each inclined to a plane including the axes of said work pieces and passing between the centers of said wheels, each of said wheels having a trough-shaped rim portion with its opening facing radially inwardly comprising side portions which are connected to one another at the periphery of the wheel and extend inward from the periphery of the wheel and form the side walls of a water space extending circumferentially around each wheel at the periphery thereof, means for rotating said wheels with an angular velocity sufficient to maintain a body of water in each trough by centrifugal force action, and means for continuously passing cooling water into each trough.

3. Apparatus as specified in claim 2, including separate means supporting each of said wheels for rotation and including cooling water passages, means for passing cooling water into said passages and means for passing cooling water from said passages into each of said troughs.

References Cited in the file of this patent

UNITED STATES PATENTS

1,480,322	Walters	Jan. 8, 1924
1,526,724	Thompson	Feb. 17, 1925
1,903,897	Harris	Apr. 18, 1933
1,946,971	Harter	Feb. 13, 1934
2,450,428	Hazelett	Oct. 5, 1948
2,529,690	Hess	Nov. 14, 1950
2,561,360	Goss	July 24, 1951
2,583,764	Buckholdt	Jan. 29, 1952
2,635,733	Reichl	Apr. 21, 1953