July 3, 1956 E. S. TUPPER 2,753,051

HINGED AND SWIVELLABLE SEAL AND STRAINER

Filed Dec. 26, 1952 3 Sheets-Sheet 1

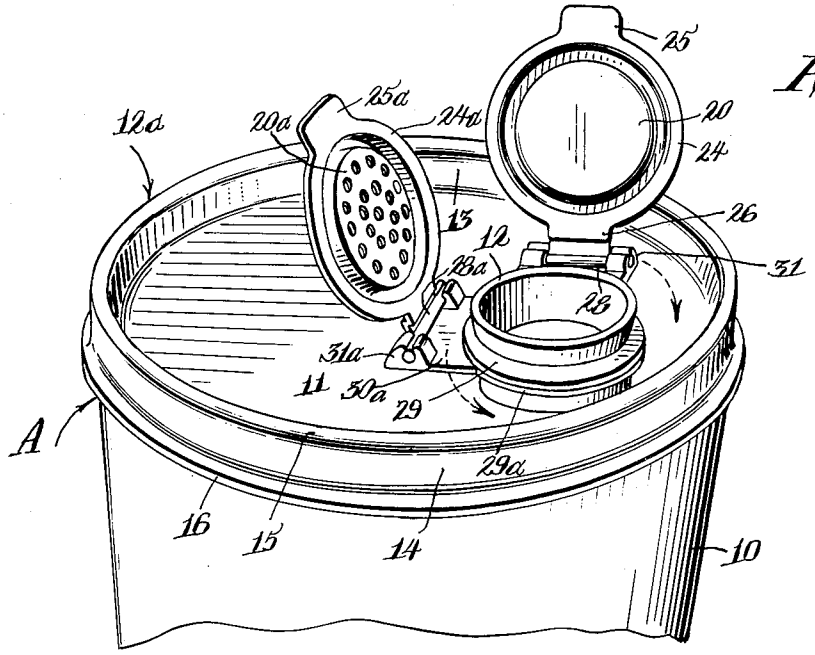

Fig. 1

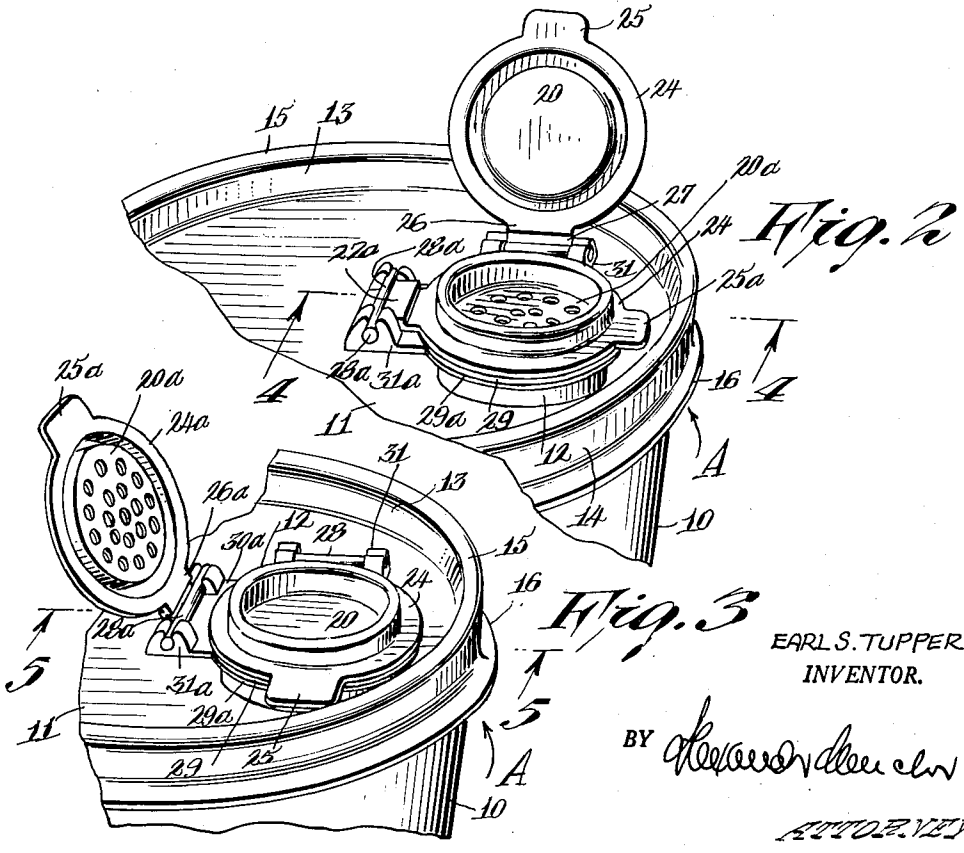

Fig. 2

Fig. 3

EARL S. TUPPER
INVENTOR.

BY

ATTORNEY

July 3, 1956 E. S. TUPPER 2,753,051

HINGED AND SWIVELLABLE SEAL AND STRAINER

Filed Dec. 26, 1952 3 Sheets-Sheet 2

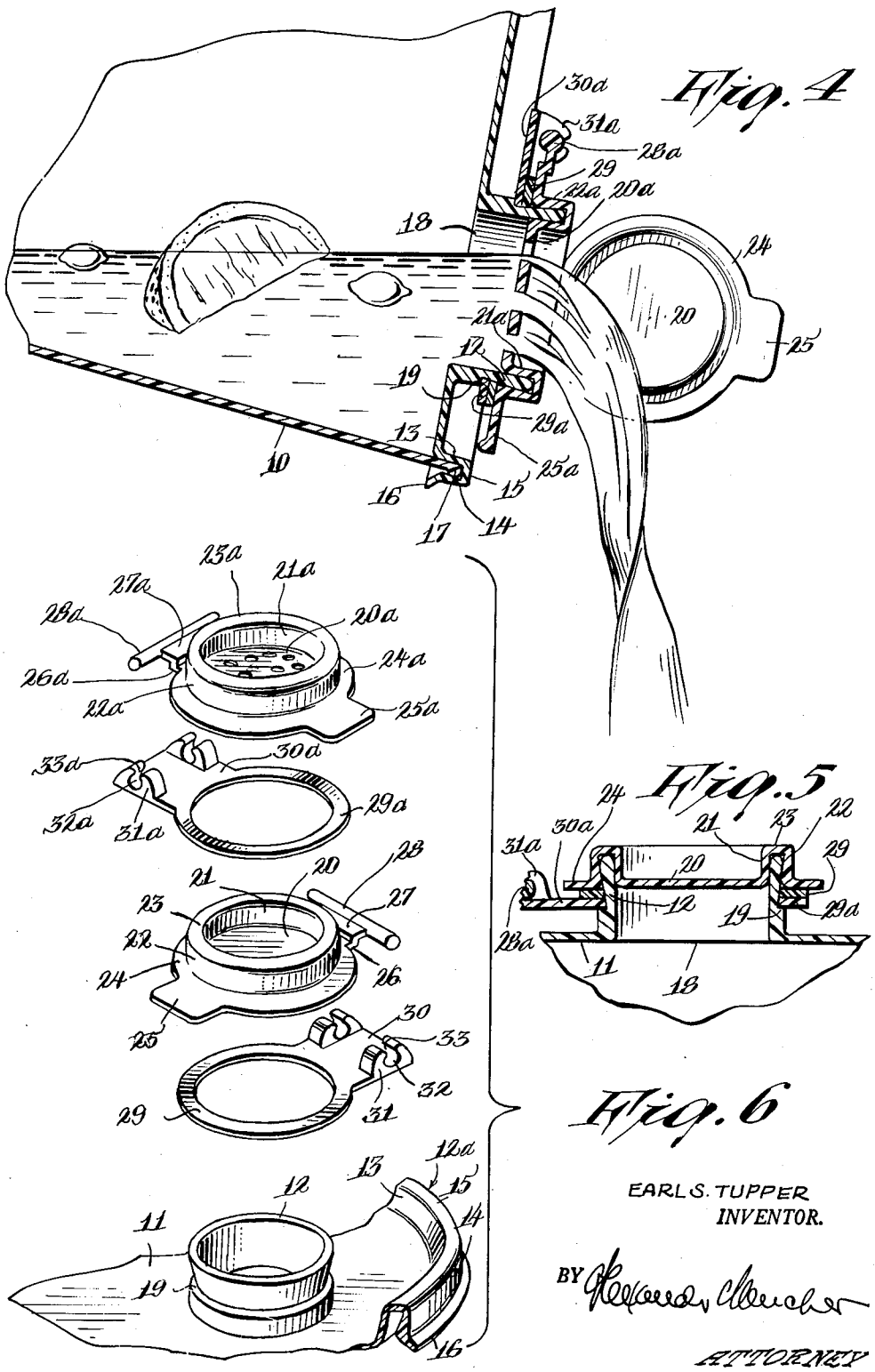

Fig. 4

Fig. 5

Fig. 6

EARL S. TUPPER
INVENTOR.

BY Alexander Mercher

ATTORNEY

July 3, 1956 E. S. TUPPER 2,753,051

HINGED AND SWIVELLABLE SEAL AND STRAINER

Filed Dec. 26, 1952 3 Sheets-Sheet 3

Fig. 7

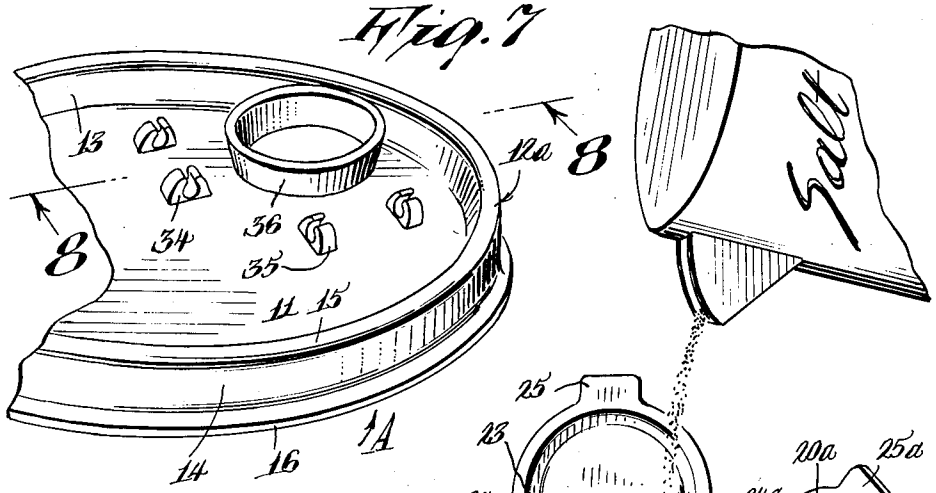

Fig. 8

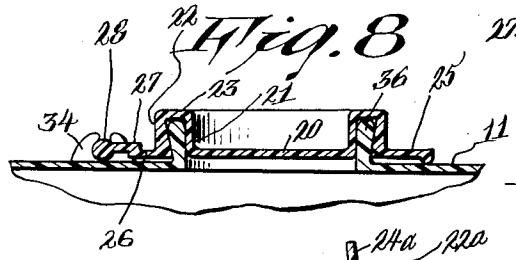

Fig. 9



Fig. 10

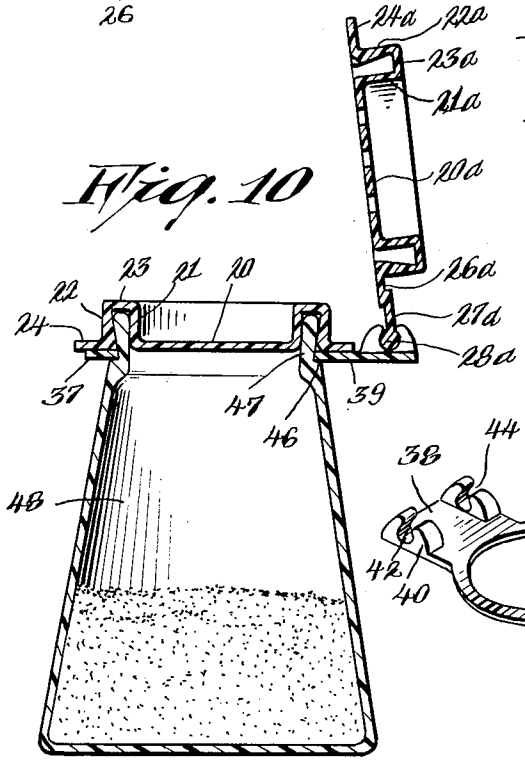

Fig. 11

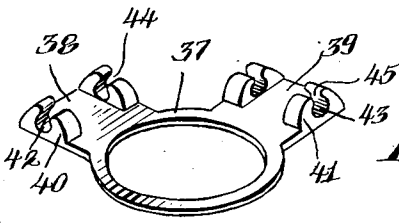

INVENTOR.
EARL S. TUPPER

BY

ATTORNEY

United States Patent Office 2,753,051 Patented July 3, 1956

2,753,051

HINGED AND SWIVELLABLE SEAL AND STRAINER

Earl S. Tupper, Upton, Mass.

Application December 26, 1952, Serial No. 327,958

10 Claims. (Cl. 210—163.5)

This invention relates generally to hinged and swivellable seal and strainer assemblies adapted to be removably secured to necks of bottles or vessels and for spouts on containers.

The assembly in parts utilizes the structure described and claimed in U. S. Patent Number 2,487,400 granted to the applicant herein on November 8, 1949.

Essentially, the hinged and swivellable seal and strainer assembly comprises a plurality of similar closure members, the differences therebetween being in the condition of the central walls; namely, the central wall of the strainer closure member is perforated while the central wall of the sealing closure member is not. Each of the closure members are formed of polyethylene or other plastic having similar physical characteristics and is hingedly and swivellably secured to a neck formed on a vessel such as a bottle, or to a neck formed on a wall of the vessel. The neck is preferably, but not exclusively, also made of poly- or other plastic having similar characteristics to enable a live seal to take place between one of the closure members and the lip of the neck.

Accordingly, the main object of the invention resides in the provision of a pair or plurality of similar closure members each hingedly and swivellably operable on the neck or spout of a vessel.

The closure member forming the seal is capable of serving as a closure for any useful type of vessel such as a beverage shaker, a dispensing device, a drinking cup, a salt and condiment cellar, a tumbler, a baby bottle, a canister, a food holder, a fluid package and the like; and the closure member forming a strainer or sieve is capable of serving as an ice-guard, sieve or strainer for the vessels above mentioned.

Another object of the invention resides in the utilization of a material in conjunction with specified structure such as polyethylene or other plastic having similar characteristics comprising a rubber-like thermal plastic composition which does not absorb and is not readily wetted by water, is odorless, resistant to acids, solvents and other chemicals, will not soften in ordinary temperatures, is unbreakable, has flexibility and elasticity with a slow rate of recovery, is frictional and waxy to the touch, is light in weight, is unaffected at working temperatures and affords a sterile medium for and consequently is resistant to mildews, micro-organisms and insects.

Another feature of the invention resides in the provision of a plurality of similar closure members disposed on the same or contacting frame or mounting members disposed on the neck of a vessel or equivalent thereof, the said closures and frame members being capable of being molded by compression or injection in all their parts and which are economical to manufacture, durable, easy to clean, and efficient in operation.

A further feature of the invention generally resides in the provision of a pair of hinged and swivellable similar closure members wherein the frame members thereof are in engagement with each other on the neck of the vessel for rotary motion to serve as displacement means for

either the seal or strainer closure member when one or the other is required to be used.

These objects and other incidental ends and advantages of the invention will hereinafter appear in the progress of the disclosure and as pointed out in the appended claims.

Accompanying this specification are drawings showing forms of the invention wherein:

Figure 1 is a view in perspective of the hinge and swivellable similar closure members in open position and mounted on frames swivellably engaged to a spout on the wall of a flat cover member of a container, the container being cut-away.

Figure 2 is a partial view in perspective of the closure members showing the strainer in closed and operative position on the neck or spout of the container and the sealer in open and non-operative position.

Figure 3 is a partial view in perspective of the closure members showing the sealer in closed and operative position on the neck or spout of a container and the strainer in open and non-operative position.

Figure 4 is a partial sectional view of an assembly such as shown in Figure 2 showing the strainer functioning in conjunction with a vessel containing a beverage such as lemonade.

Figure 5 is an enlarged sectional view of Figure 3 across the plane 5—5 thereof.

Figure 6 is an exploded view in perspective of the elements of the assembly shown in Figures 1–5.

Figure 7 is a partial view in perspective of a modified form of mounting for a plurality of similar closure members adapted for alternate use and for hinged connection.

Figure 8 is an enlarged sectional view of Figure 7 across the plane 8—8 thereof.

Figure 9 is a view in perspective of a pair of similar closure members applied to the neck of a salt cellar, said members being hingedly and swivellably secured thereto and as shown are in open position.

Figure 10 is an enlarged sectional view of Figure 9 across the plane 10—10 thereof.

Figure 11 is a view in perspective showing a modified form of frame to accommodate two similar closure members alternately applicable both hingedly and swivellably to the neck or spout of a vessel.

In accordance with the invention and in accordance with the preferred forms shown, numeral 10 indicates a vessel which may be of any type having a top closure wall 11 and a spout 12. Vessel or container 10 may be used for household, commercial or any other purposes wherein a pouring neck is required and wherein the neck is capable of receiving a pair or more of similar closure members, one serving as a seal when required and the other serving as a strainer or sieve (as for salt cellars and the like) the said closure members each being removably and hingedly secured to swivellable, contacting and aligned frame members as will hereinafter be described.

The neck or spout 12 forms the top opening or pourer of a vessel and as shown in Figures 1–6, the spout is formed on a removable cover member generally indicated by letter A. Cover A is comprised of a main central wall already designated by numeral 11 and has an upwardly extending peripheral rim generally indicated by numeral 12*a*, said rim being formed as an inverted groove having an inner wall 13, a spaced outer wall 14, a top connecting wall 15 and a portion 16 offset from the base of the outer wall 14, the rim 12*a* being adapted to engage the upper edge of container 10, the said edge as shown being expanded in the form of a bead 17. Cover A is preferably made of polyethylene or other substance having similar characteristics, but for purposes of the invention is not so limited.

Spout or neck **12** may form the top terminal of a bottle or vessel but as shown forms the spout surrounding an opening **18** in wall **11** of cover A and as shown is provided with an intermediate shoulder **19** from which the outer surface of the spout may taper outwardly as shown in Figures 4 and 5.

In one form of the invention, it is in connection with the vessel and bottle neck or spout **12**, whether the walls thereof are inclined or not, that the similar closure members herein are applicable.

Thus, the sealing closure member consists of a central wall **20** having a peripheral and upwardly extending inverted grooved rim formed of an inner wall **21**, an outer wall **22**, a top connecting wall **23** and an outwardly extending flange **24** continuing from the lower edge of outer wall **22**. Flange **24** at opposite diametric points has a removal tab projection **25** and an extension **26** carrying a raised bracket platform **27**. The said platform at its rear free edge carries a cylindrical rod **28** which projects beyond each of the side edges thereof and the diameter extends above and below said platform **27** as best shown in Figure 6.

It is to be noted that the sealing by the closure member described is effected at the upper portion of the inside of outer wall **22** and the inside of top wall **23** with respect to the walls of spout **12**, and that the outer diameter of spout wall **12** therealong is greater than the inner diameter of wall **22** whereby a positive sealing engagement is assured between the closure member and the spout. When the spout wall **12** is made of polyethylene or of a substance having similar physical characteristics as the closure member, a live seal is effectuated between the respective parts.

In order to provide the closure member with hinge and swivellable characteristics relative to spout **12**, there is provided a cooperating mounting device or frame for removable application to the spout.

The frame, as shown, consists of a centrally apertured disc **29** provided with a rear extension apron **30** having along the rear of the side edges a pair of aligned lugs each indicated by numeral **31**, said lugs having aligned cylindrical openings each indicated by numeral **32** and with a diameter sufficient to permit rod **28** to slide therethrough. Each of the cylindrical openings **32** communicates with a top lug notch **33**, each of said notches being substantially of a width to permit apron **27** to slide therethrough.

As shown in Figure 6, disc or frame **29**, which is made of any suitable material but preferably resilient plastic such as polyethylene or a vinyl for accommodating differences in spout diameter, is applicable over spout **12** and is based on shoulder portion **19** thereof for swivellable engagement. Frame **29** is further more capable of removability when desired from the spout.

As best shown in Figure 6, rod **28** is removably insertable by lateral linear motion into the aligned openings **32** of lugs **31** while notches **33** permit clearance for linear movement of apron **27** therethrough. In this fashion lugs **31** permit the closure member from rod **28** to be hinged adjacent to the lip of the spout **12** for opening and closing purposes. The type of hinging described permits full withdrawal of the closure member from frame **29** and further permits the closure member when in operative position to lie flat on cover wall **11**.

Although frame **29** with the closure member mounted thereon is capable of being more easily swivellable while the closure member is in open position, nevertheless, swivelling may be accomplished with the closure member in closed position.

As shown in Figure 1, it is to be observed that the width of apron **27** is less than the distance between the inner walls of lugs **31** to permit rotation of rod **28** within the cylindrical openings **32** for approximately 180 degrees.

To open the closure member, the underside of removal tab **25** may be grasped by the thumb while the index finger bears against central wall **20**. In this way, the seal between spout **12** and the engaging walls of the grooved rim is gradually and successively broken in a peeling-off manner; and when there is full disengagement, the closure member remains hingedly, rotatably and removably secured relative to spout **12**. For removal relative to frame **29**, the closure member is set at a 90 degree angle with respect to the horizontal plane.

For sealing purposes, the closure member is swung towards closed position on rod **28** about lugs **31** and the operation is most suitably completed by continuous sliding finger pressure along the top groove wall **23** from the rear forwardly.

It is to be observed that spout **12** is tall enough above shoulder **19** to receive in a stacked relationship one or more identical frames for one or more identical closure members except for the modification by perforation of the central wall, the second frame member herein shown being indicated by the same numerals as the first except with post-script letters *"a"* added.

In connection with the strainer closure member for application to frame **29***a*, the central wall **20***a* thereof is provided with perforations and the remaining structure is identical and indicated by the same numerals as the sealing closure member except with post-script letters *"a"* added.

As shown in Figures 1 and 2 the mounting members **29** and **29***a* are applied to spout shoulder **19** in relative superposing relationship and the straining and sealing closure members are capable of being introduced into the lugs interchangeably. The frame members preferably are positioned at 90 degrees apart. Figure 1 shows the closure members in open position, but they may be swung back to overlie wall **11** by overcoming the sliding friction between the respective rods **28** and **28***a* and the openings **32** and **32***a* of lugs **31** and **31***a*. Figure 2 shows the straining closure member in closed position while the sealing closure member is in open position. Figure 3 shows the sealing closure member in closed position and the straining closure member in open position.

Vessel **10** shown in Figures 1, 2 and 7 may be used as an alternate beverage shaker and dispenser provided with a strainer, Figure 4 showing the device in the process of pouring contents thereof through the strainer closure member.

It is to be observed that the thickness of frames **29** and **29***a* are at a minimum to suit requirements and the elevation of frame **29** over **29***a* will not affect closure registration with spout **12** since the yieldability of apron **30** serves in a compensatory manner.

Modifications of the invention are shown in Figures 7–11.

In Figure 7 is shown a flat closure member A having two offset pairs of lugs as indicated by numerals **34** and **35**. The sealing closure member and the straining closure member are respectively applicable to the respective lug pairs. The spout of vessel A is indicated by numeral **36** and as shown is tapered. Figure 8 shows the cover member A of Figure 7 having the sealing closure member in closed position and engaging the lugs **34**.

Figure 11 is a modified form of frame member indicated by numeral **37** and has a pair of offset aprons **38** and **39** extending outwardly and as shown at 90 degrees to each other. Each of said aprons has a pair of lugs indicated by numerals **40** and **41**, the said pairs of lugs having respectively aligned cylindrical openings **42** and **43** and top notches **44** and **45** respectively for accommodation of rods **28** and **28***a* of the sealing and straining closure members. Frame member **37** is removably and swivellably applicable to any type of spout but as shown in Figure 10 is applied to a shoulder **46** of a neck **47** of a type of salt cellar **48**.

Thus has been described a straining and sealing assembly wherein the closure members are selectively operable on a single spout for sealing and straining or sieving purposes.

I wish it understood that minor changes and variations in the integration, size, shape, material and location of parts may all be resorted to without departing from the spirit of the invention and the scope of the appended claims.

I claim:

1. A combined strainer and closure seal both of resilient plastic material for a receptacle neck shoulder comprising superposing and rotatable ring members supportingly mounted on said neck shoulder, offset pairs of spaced lugs, each pair being secured to a ring member and each pair being disposed adjacent said neck, a closure member and a strainer member each having a central wall and each including a peripheral and downwardly extending flange sealably engageable with the rim of said neck, each of said flanges having an outwardly directed skirt, an apron member offset from each of said skirts and carrying at the rear edge a rod, each pair of said lugs having aligned openings and communicating upper notches whereby each rod is insertable through and mountable in each pair of openings and each apron member through each pair of notches for hingeable and alternate sealable engagement with the lug pairs and rim of the receptacle neck respectively, the central wall of the strainer member being perforated.

2. A combined strainer and closure seal as set forth in claim 1 wherein said strainer and closure seal are formed of locally deformable plastic material.

3. A combined strainer and closure seal both of resilient plastic material for a receptacle neck shoulder comprising superposing and rotatable ring members supportingly mounted on said neck shoulder, offset pairs of spaced lugs, each pair being secured to a ring member and each pair being disposed adjacent said neck, a closure member and a strainer member each having a central wall and a peripheral and upwardly offset and inverted receptacle rim-engaging groove having inner, outer and connecting walls, each of said groove outer walls having an outwardly directed skirt, an apron member offset from each of said skirts and carrying at the rear edge a rod, each pair of said lugs having aligned openings and communicating upper notches whereby each rod is insertable through and mountable in each pair of openings and each apron member through each pair of notches for hingeable and alternate sealable engagement with the lug pairs and rim of the receptacle neck respectively, the central wall of the strainer member being perforated and the inner lateral dimension of each of the outer groove walls being smaller than the outer lateral dimension of the receptacle rim.

4. A combined strainer and closure seal as set forth in claim 3 wherein said strainer and closure seal are formed of polyethylene.

5. A combined strainer and closure seal both of resilient plastic material mounted on a receptacle neck shoulder comprising neck engaging, rotatable and, superposing collar members supported on said neck shoulder each having offset pairs of spaced lugs, a closure member and a strainer member each having a central wall and each including a peripheral and downwardly extending flange sealably engageable with the rim of said neck, each of said flanges having an outwardly directed skirt, an apron member offset from each of said skirts and carrying at the rear edge a rod, each pair of said lugs having aligned openings and communicating upper notches whereby each rod is insertable through and mountable in each pair of openings and each apron member through each pair of notches for hingeable and alternate sealable engagement with the lug pairs and rim of the receptacle neck respectively, the central wall of the strainer member being perforated.

6. A combined strainer and closure seal as set forth in claim 5 wherein said strainer and closure seal are formed of locally deformable and resilient plastic.

7. A combined strainer and closure seal both of resilient plastic material mounted on a receptacle neck shoulder comprising a pair of superposable and relatively swivellable neck engaging collar members supported on said neck shoulder, each having an offset pair of lugs, a closure member and a strainer member each having a central wall and each including a peripheral and downwardly extending flange sealably engageable with the rim of said neck, each of said flanges having an outwardly directed skirt, an apron member offset from each of said skirts and carrying at the rear edge a rod, each pair of said lugs having aligned openings and communicating upper notches whereby each rod is insertable through and mountable in each pair of openings and each apron member through each pair of notches for hingeable and alternate sealable engagement with the lug pairs and rim of the receptacle neck respectively, the central wall of the strainer member being perforated.

8. A combined strainer and closure seal as set forth in claim 3 wherein said strainer and closure seal are formed of polyethylene.

9. A combined strainer and closure seal both of resilient plastic material for a receptacle neck shoulder comprising a pair of superposable and relatively swivellable neck engaging collar members supported on said shoulder each having an offset pair of lugs, a closure member and a strainer member each having a central wall and each having a peripheral, upwardly offset and inverted receptacle rim-engaging groove, each of said grooves having an inner, an outer and a connecting wall, each of said groove outer walls having an outwardly directed flange, an apron member offset from each of said flanges and carrying at the rear edge a rod, each pair of said lugs having aligned openings and communicating upper notches whereby each rod is insertable through and mountable in each pair of openings and each apron member through each pair of notches for hingeable and alternate sealable engagement with the lug pairs and rim of the receptacle neck respectively, the central wall of the strainer member being perforated and the inner lateral dimension of each of the groove outer walls being less than the outer lateral dimension of the receptacle rim.

10. A combined strainer and closure seal as set forth in claim 9 wherein said strainer and closure seal are formed of locally deformable plastic material.

References Cited in the file of this patent

UNITED STATES PATENTS

195,507	Heuermann	Sept. 25, 1877
302,484	Haslage	July 22, 1884
1,710,140	Behrman	Apr. 23, 1929
2,045,855	Hovey	June 30, 1936
2,450,520	Maddux	Oct. 5, 1948
2,487,400	Tupper	Nov. 8, 1949