United States Patent

Ahlstone

[15] 3,638,725

[45] Feb. 1, 1972

[54] DIRECT DRIVE CASING HANGER APPARATUS

[72] Inventor: **Arthur G. Ahlstone**, Ventura, Calif.

[73] Assignee: **Vetco Offshore Industries, Inc.**, Ventura, Calif.

[22] Filed: **May 15, 1970**

[21] Appl. No.: **37,527**

[52] **U.S. Cl.** **166/226**, 166/87

[51] **Int. Cl.** **E21b 33/00**

[58] **Field of Search** 166/86, 87, 88, 89, 115, 224, 166/226; 285/18, 140, 142, 276

[56] **References Cited**

UNITED STATES PATENTS

3,273,646	9/1966	Walker	166/88
3,279,539	10/1966	Brown et al	166/88
3,335,799	8/1967	Miller	166/87
3,382,921	5/1968	Todd	166/88
3,460,615	8/1969	Watkins	166/208
3,468,559	9/1969	Ahlstone	166/87
3,492,026	1/1970	Ahlstone	166/87

Primary Examiner—James A. Leppink

Attorney—Bernard Kriegel

[57] **ABSTRACT**

Well bore casing hanger apparatus in which a hanger body has a pack-off or seal structure threadedly mounted thereon, the seal structure also being threadedly connected to a lower portion of a running tool swivelly related to an upper portion of the running tool, the upper running tool portion being secured to a running string for lowering the apparatus to bring its body into engagement with a seat within an underwater wellhead housing, at which time a fluid circulation path or passage between the body and housing is open. The upper running string portion is rotated to thread the seal structure downwardly along the body to passage-closing position and to also unthread the seal structure from the lower running tool portion, which permits the running string and running tool to be elevated from the hanger apparatus and withdrawn to the drilling rig.

16 Claims, 9 Drawing Figures

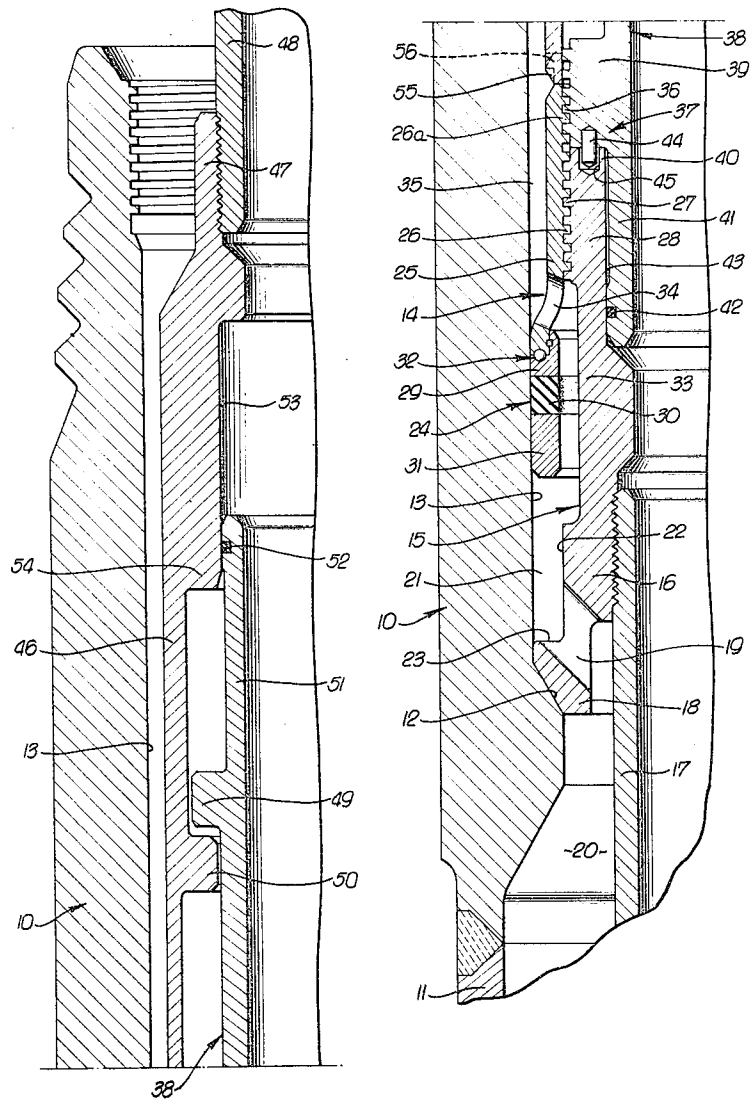

FIG. 1a.

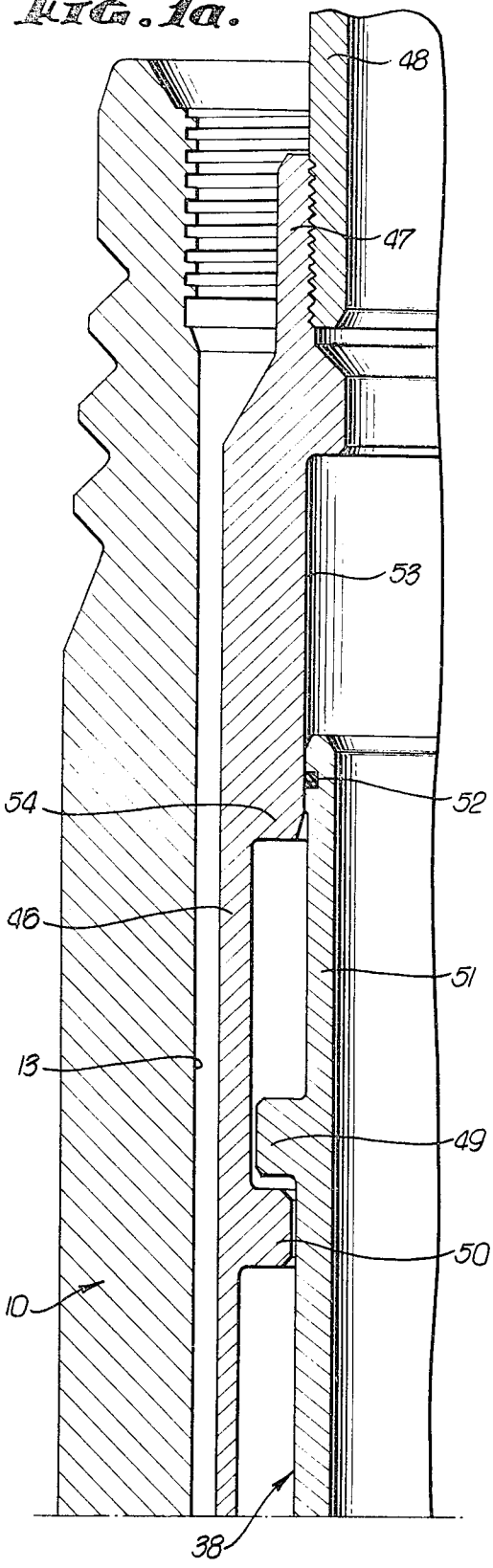

FIG. 1b.

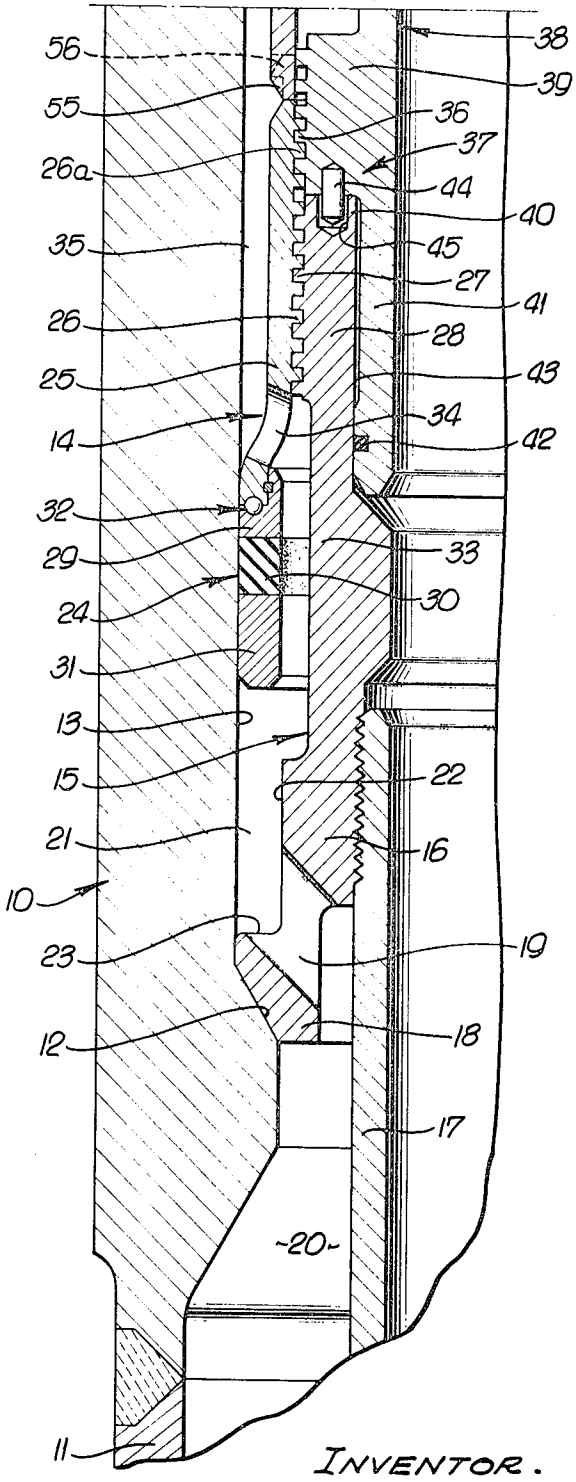

INVENTOR.
ARTHUR G. AHLSTONE
By Bernard Kriegel
ATTORNEY.

FIG. 2a.

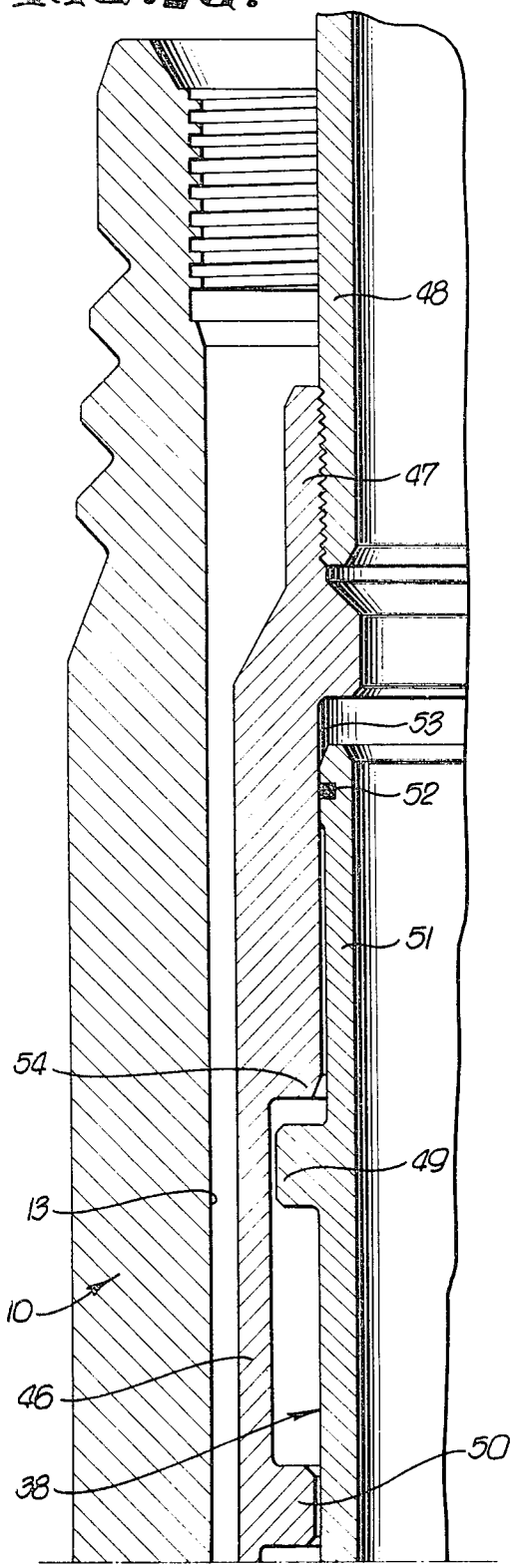

FIG. 2b.

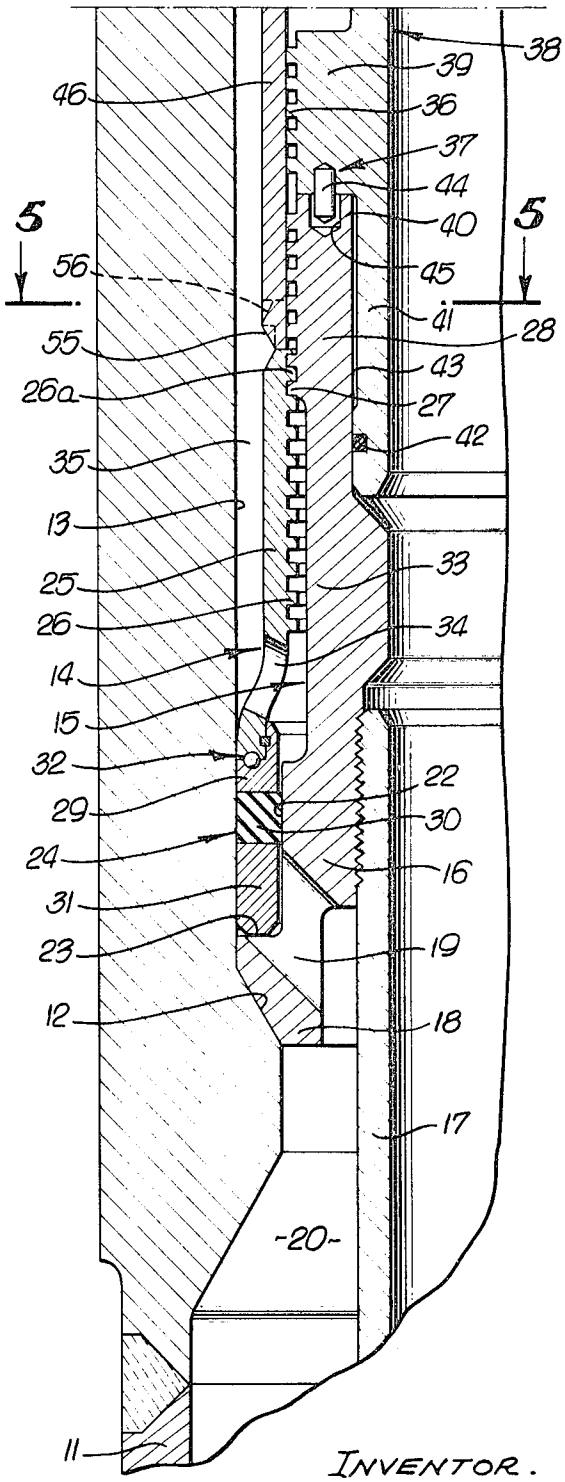

INVENTOR.
ARTHUR G. AHLSTONE
BY Bernard Kriegel
ATTORNEY.

FIG. 3.

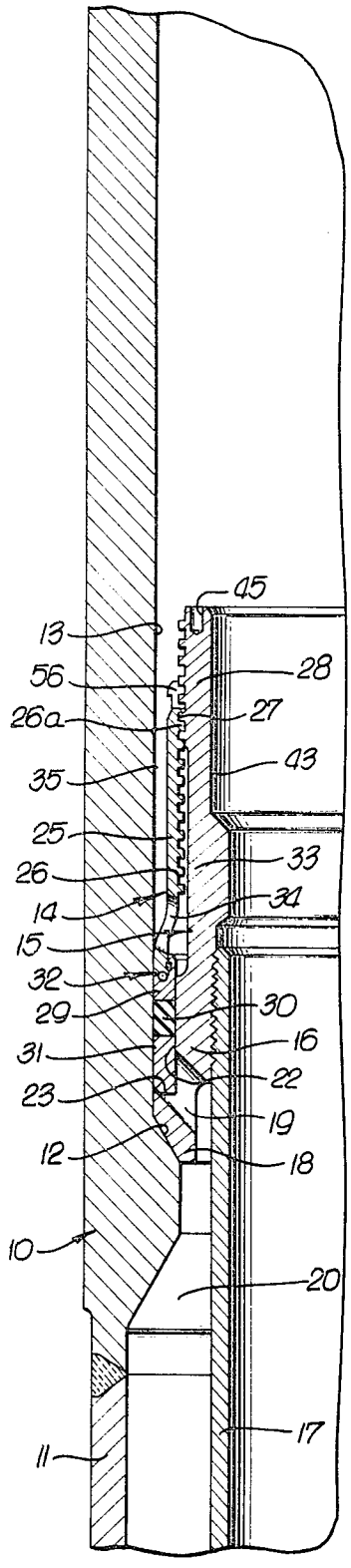

FIG. 5.

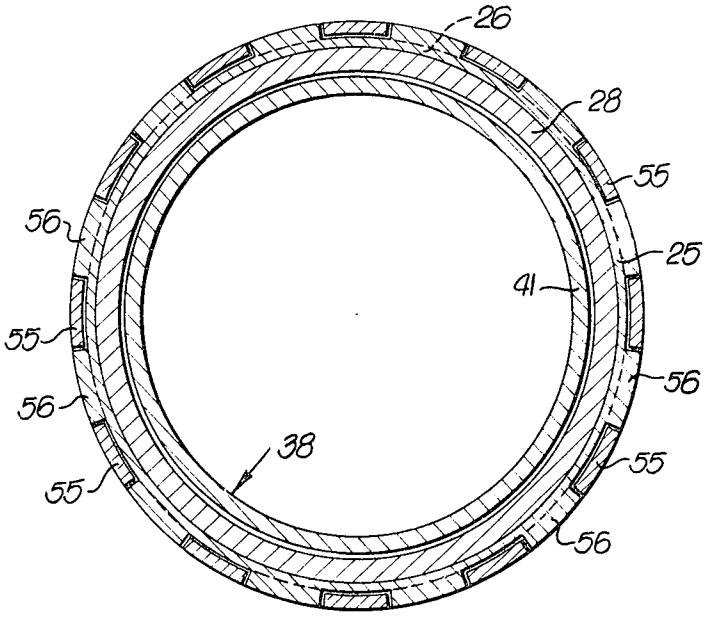

FIG. 6.

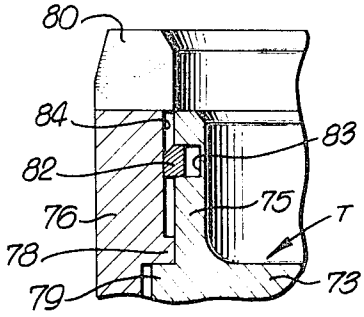

INVENTOR.
ARTHUR G. AHLSTONE
By Bernard Kriegel
ATTORNEY.

FIG. 4a.

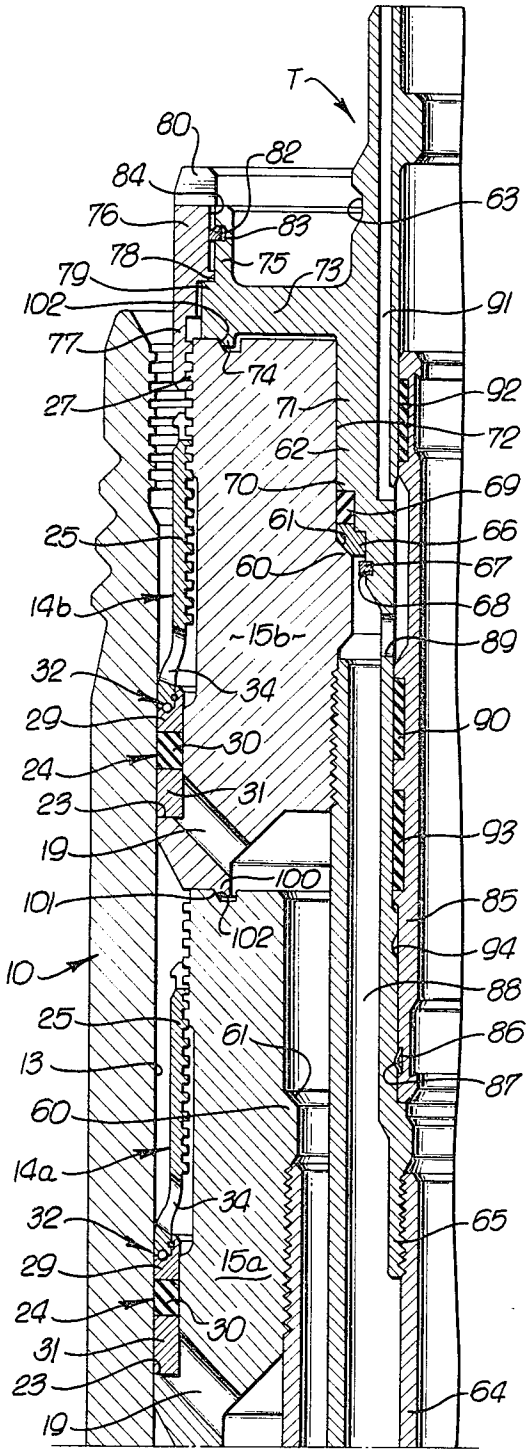

FIG. 4b.

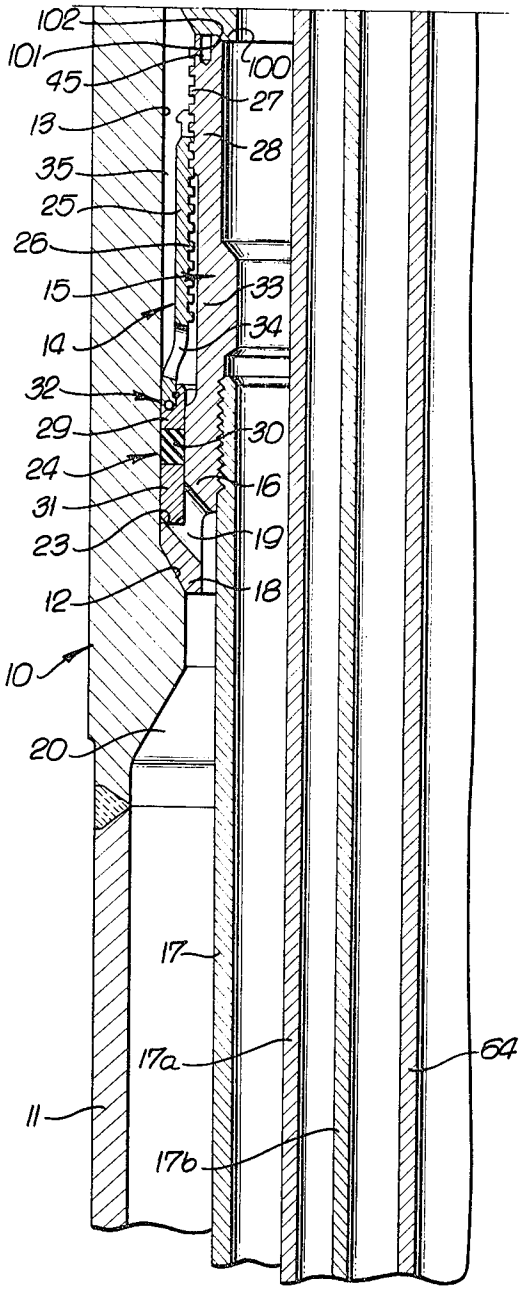

INVENTOR.
ARTHUR G. AHLSTONE
By Bernard Kriegel
ATTORNEY.

DIRECT DRIVE CASING HANGER APPARATUS

During the drilling of subsea or other underwater wells, most subsea casing hanger systems require that the hanger and pack-off assembly or seal structure be run separately. Some casing hanger systems provide for the running of the hanger and seal structure together, but a separate round trip of a seal-actuating tool is required to energize the seal and to permit its testing. The rig time required for the extra round trip is very costly to the operator for whom the work is being done, the cost presently ranging from about $500 to $1,000 per hour, the extra round trip usually requiring several hours at a minimum. If the pack-off is not installed properly and tested before the cement slurry has had an opportunity of setting up, it might become impossible to secure an appropriate seal closing the passage between the casing hanger body and a surrounding hanger housing in which it is set, which sometimes results in the loss of the well. It is desirable to actuate the pack-off assembly immediately upon completion of the cementing operation so that the seal can be energized and tested within minutes after the cementing operation has been completed.

Actuation of the pack-off assembly and its testing has been proposed heretofore (see, for example, U.S. Pat. Nos. 3,335,799 and 3,492,026). The last-mentioned patent is illustrative of apparatus now being employed. However, such apparatus requires the provision of bypass grooves and/or bypass ports in the wellhead housing, which are expensive and costly to manufacture.

By virtue of the present invention, the casing hanger body and pack-off assembly or seal structure are lowered as a unit from a drilling rig on a running tool with a running string attached thereto, and with the casing string secured to and depending from the body. The entire organization is lowered until the body and seal structure move into a surrounding wellhead housing, the body engaging a seat in the wellhead housing. At this time, a circulating passage between the body and wellhead housing is in open condition, permitting fluid to be circulated down through the casing string and up around the well bore annulus surrounding it, followed by the performance of the operation of cementing the casing string in the well bore, the cement usually being displaced in such quantities as to rise into the circulation passage. The seal assembly is actuated to shift it into its circulation passage closing position, and, at the same time, the running tool is released from the seal assembly and the casing hanger body. With the running tool still in sealing relation to the casing hanger body, the pack-off of the seal structure can be tested to insure against its leaking. If leaking does occur, the running tool can still be actuated to increase the packoff force to insure the complete effectiveness of the seal assembly.

Accordingly, an object of the invention is to provide a casing hanger apparatus in which the hanger body and seal structure are lowered in the well bore together on the running string, and in which the running string is actuated for the purpose of shifting the seal structure to its position closing the circulation passage between the hanger body and a surrounding wellhead housing or body, and also to release the running tool from the hanger body, thereby performing both operations with a single round trip.

Another object of the invention is to provide an apparatus of the above type, which is of simpler construction and less costly to manufacture than prior devices, such as exemplified by the above two U.S. Patents.

Yet a further object of the invention is to provide a casing hanger apparatus which renders it comparatively easy to provide the proper casing thread on the hanger body, thereby making it possible to reduce inventories and inventory expenses. More particularly, the exteriors of all casing hangers to fit within a particular size wellhead housing, and the pack-off used in conjunction therewith, can be made identical, and, therefore, interchangeable, it only being necessary to change the inner shape and casing thread on the hanger body.

Yet a further object of the invention is to provide a casing hanger apparatus which permits easy stacking in any combination in a wellhead housing, rather than requiring their being landed in a specific sequence, such as presently required with some other types of apparatus now on the market. A lower casing hanger assembly can provide the seat in the wellhead housing for an upper casing hanger body.

This invention possesses many other advantages, and has other objects which may be made more clearly apparent from a consideration of a form in which it may be embodied. This form is shown in the drawings accompanying and forming part of the present specification. It will now be described in detail, for the purpose of illustrating the general principles of the invention; but it is to be understood that such detailed description is not to be taken in a limiting sense.

Referring to the drawings:

FIGS. 1*a* and 1*b* together constitute a quarter longitudinal section through casing hanger apparatus embodying the invention, the parts being illustrated with a circulation passage in open condition, FIG. 1*b* being a lower continuation of FIG. 1*a*;

FIGS. 2*a* and 2*b* are views corresponding to FIGS. 1*a* and 1*b* with the circulation passage closed, FIG. 2*b* being a lower continuation of FIG. 2*a*;

FIG. 3 is a quarter longitudinal section, on a reduced scale, corresponding to FIGS. 2*a* and 2*b*, with the running tool removed;

FIGS. 4*a* and 4*b* together constitute a quarter longitudinal section illustrating a plurality of casing hangers disposed in an outer casing with circulation passages closed, the uppermost casing hangers supporting a tubing hanger and depending tubing string, FIG. 4*b* being a lower continuation of FIG. 4*a*;

FIG. 5 is a cross section, on a reduced scale, taken along the line 5—5 on FIG. 2*b*;

FIG. 6 is an enlarged fragmentary longitudinal section through an upper portion of the apparatus illustrated in FIG. 4*a*.

As illustrated in the drawings, a wellhead housing **10** is suitably disposed above a well bore (not shown), which may extend downwardly from an ocean floor (not shown), a suitable pipe string **11** being secured to the lower end of the housing and extending into the well bore. This housing has a downwardly tapering seat **12** therein and a cylindrical internal surface **13** extending upwardly from such seat to the upper end of the housing.

Casing hanger apparatus **14** is to be lowered from a suitable drilling vessel or platform (not shown) at or above the surface of the body of water through which the well bore is to be drilled and completed. The casing hanger apparatus includes an inner body **15**, having an internal thread **16** to which the upper end of a casing string **17** is threadedly secured, the casing string being adapted to extend downwardly in the well bore to the desired depth when the hanger apparatus has been installed in the wellhead housing. The inner body includes a lower terminal portion **18** adapted to engage the housing seat **12** to enable the hanger body to support the casing string in the well bore. The body has a plurality of ports **19** extending therethrough providing a portion of a circulation passage for fluid from the annular space **20** between the inner and outer casing strings **11**, **17** to flow into the annulus **21** between the external cylindrical seal surface **22** on the hanger body immediately above the body ports **19** and the opposed inner cylindrical seal surface **13** of the wellhead housing **10**. The body has an upwardly facing seat or shoulder **23** thereon at the lower end of this annular space, against which a seal structure or pack-off assembly **24** can abut when the circulation passage **21** between the casing hanger and housing is to be closed.

The seal structure includes an upper actuator and coupling sleeve **25** having an internal thread **26**, preferably of right-hand, meshing with a companion external thread **27** on the upper portion **28** of the hanger body **15**, such upper external thread extending to the upper end of the body. The sleeve **25** is swivelly connected to an upper abutment ring **29** that en-

gages an elastomer packing element 30, which, in turn, engages a lower abutment ring 31. The swivel connection 32 between the sleeve 25 and upper abutment ring 29, and the structural and functional relationship between the upper abutment ring, packing element 30 and lower abutment ring 31, by themselves form no part of the present invention and are illustrated and described in detail in U.S. Pat. No. 3,492,026. The swivel connection 32 permits the actuator and coupling sleeve 25 to be rotated relative to the upper abutment ring 29, packing assembly 30 and lower abutment ring 31.

As specifically illustrated, the actuator sleeve 25, swivel 32, and portions of 29, 30, 31 of the seal structure therebelow are laterally spaced from a reduced diameter portion 33 of the hanger body below its external thread 27 to provide a continuation of the circulation passage, which includes the annulus 21 between the hanger body seal surface 22 and the housing seal surface 13. Such flow passage further includes a plurality of ports 34 in the lower portion of the actuator and coupling sleeve 25 below its thread 26 that open through the exterior of the sleeve into the space 35 between the threaded portion of the sleeve and the cylindrical wall 13 of the wellhead housing 10.

Initially, the seal structure is disposed in the position illustrated in FIG. 1*b*, in which the bypass or circulating passage is open and in which the upper portion of the actuator and coupling sleeve 25 extends above the upper end of the casing hanger body 15. This upper portion has internal threads 26*a* that form a continuation of the internal threads 26 of the sleeve meshing with the external threads 27 of the body, the upper sleeve portion being in threaded mesh with external threads 36, such as right-hand threads, on a lower inner portion 37 of a running tool 38, the external threads being provided on an enlargement or external flange 39 of the lower running tool portion. This flange abuts or rests upon the upper end 40 of the hanger body 15, a skirt 41 depending therefrom within the body and carrying one or more side seal rings 42 thereon sealing against the inner cylindrical wall 43 of the hanger body. To insure that the threads 36 on the lower portion 37 of the running tool form a continuation of the external threads 27 on the body 15, the lower portion of the running tool is maintained in a predetermined circumferential position with respect to the hanger body by one or a plurality of locator pins 44 fixed to the running tool flange 39 and extending downwardly into a longitudinal socket or sockets 45 in the hanger body and opening through its upper end. By being threaded to both the hanger body 15 and the lower portion 37 of the running tool 38, the actuator and coupling sleeve 25 connects the lower portion 37 of the running tool to the hanger body 15, so that the two are movable longitudinally as a unit, the lower portion 37 of the running tool being prevented from rotating relative to the hanger body 15 by the locator pins 44.

The running tool 38 includes an upper outer portion 46 having an upper threaded box 47 for threadedly attaching it to the lower end of a tubular running string 48 extending to the drilling rig (not shown), and by means of which the casing hanger apparatus and the casing string 17 hanging therefrom are lowered from the drilling rig, to place the casing string at its appropriate depth in the well bore, and to bring the terminal portion 18 of the hanger body into engagement with the housing seat 12. The upper portion 46 of the running tool is swivelly connected to the lower portion 37 of the running tool, the latter having an external flange 49 above an inner flange 50 on the upper portion, such that the lower portion of the running tool hangs from its upper portion during longitudinal movement of the apparatus from the drilling rig. The outer upper flange 49 is spaced longitudinally a substantial distance above the threaded flange portion 39 to permit downward movement of the upper running tool portion 46 along the lower running tool portion 37 in operating the device, as described hereinbelow. The lower portion includes a skirt or sleeve 51 extending upwardly from its outer flange 49, carrying one or a plurality of side seal rings 52 adapted to slidably seal with the inner cylindrical wall 53 of the outer running tool portion, this wall portion terminating at a downwardly facing shoulder 54 initially spaced a substantial distance above the outer flange 49 to permit the upper portion 46 to move longitudinally along the lower portion 37.

When the lower portion 37 of the running tool is supported by the inner flange 50 of the upper portion, axially extending clutch dogs or teeth 55 at the lower end of the upper running tool portion 46 mesh with companion upwardly extending teeth 56 at the upper end of the actuator and coupling sleeve 25 of the seal structure, the parts being in the condition illustrated in FIGS. 1*a*, 1*b*. Rotation of the running string 48 and upper portion of the running tool 46, as to the right, will rotate the actuator and coupling sleeve 25 with respect to the threaded flange or head 39 of the lower portion of the running tool 37 and with respect to the casing hanger body 15 to feed the seal structure 24 downwardly, and to move the seal portion 30 into the annulus 21 between the seal surfaces 22, 13, also bring the lower abutment 31 into engagement with the upwardly facing seat or shoulder 23. Before the seal is effected between the opposed seal surfaces 22, 13, the coupling sleeve 25 will have been threaded downwardly completely off the threaded head 39 of the lower portion 37 of the running tool. When the lower abutment engages the seat 23, rotation of the sleeve 25 by the upper portion 46 of the running tool will move the upper abutment 29 toward the lower abutment and compress the packing element 30 therebetween, expanding it both inwardly and outwardly into firm sealing engagement with the external seal surface 22 and the internal seal surface 13, thereby closing the circulation passage 20, 19, 21, 34, 35. Rotation of the actuator sleeve 25 occurs without rotating the upper abutment ring 29, packing element 30 and lower abutment 31 because of the swivel connection 32 therebetween.

In the use of the apparatus, the casing string 17 is lowered from the drilling rig through the wellhead housing 10 and into the well bore. When the uppermost casing string section is at the drilling rig, the hanger body 15 is threadedly secured thereto and the seal structure 24 threadedly mounted on the body. It is also threadedly coupled to the lower portion 37 of the running tool 38, which has been appropriately located with respect to the hanger body 15 by the locator pins 44 fitting within the body sockets 45. The outer portion 46 of the running tool is then in appropriate position, with its clutch dogs 55 meshing with the clutch dogs 56 on the actuator and coupling sleeve 25, the parts then being in the relative position illustrated in FIGS. 1*a*, 1*b*. The running tool is threadedly secured to the casing or other tubular running string 48, lowering of the casing 17 in the well bore and of the casing hanger apparatus and running tool occurring until the apparatus 14 moves into the wellhead housing 10 and the lower terminal 18 of the hanger body 15 engages the housing seat 12, the parts then being in the condition illustrated in FIGS. 1*a*, 1*b*. At this time, the circulation passage is open.

Circulating fluid can now be pumped down the running string 48, the hanger apparatus 14 and into the casing string 17, discharging from its lower end, or at any other desired point through a ported collar (not shown) for upward passage through the annulus 20 surrounding the casing string, and then through the bypass or circulation passage 19, 21 and into the wellhead housing 10, flowing around the running tool 38 and upwardly through the annulus surrounding the running string 48 back to the drilling rig. After circulation has been completed, the required charge of cement slurry is pumped down the running string 48 and the casing string 17, flowing out of the casing shoe or other desired point, then passing upwardly through the annulus 20 surrounding the casing string until it arrives at the circulation passage between the casing hanger and housing.

Immediately upon completion of the operation of pumping the cement into place, the running string 48 and upper portion 46 of the running tool are rotated to the right, such right-hand rotation being transmitted to the actuator and coupling sleeve 25, which is threaded downwardly to unscrew it completely

off the threaded head 39 of the lower portion 37 of the running tool, and to bring the lower abutment 31 into engagement with the shoulder 23 and then to effect movement of the upper abutment 29 toward the lower abutment 31 and compression of the elastomer packing element 30 between the outer and inner seal surfaces 22, 13, thereby closing the circulation passage. The casing string 17 prevents turning of the casing hanger body 15 and of the lower portion 37 of the running tool pinned thereto, insuring the appropriate downward threading of the actuator sleeve 25 and of the packing structure swivelly carried thereby to its sealed position. When the seal has been completed against the seal surfaces 22, 21, it will be noted that the upper end of the actuator and coupling sleeve 25 is disposed substantially below the upper end of the casing hanger body 15, exposing a plurality of thread turns (FIGS. 2*a*, 2*b*).

With the pack-off completed, the blowout preventer (not shown) can be closed on the running string 48 and pressure applied through the choke or kill line (not shown) to the annular space 35 between the casing hanger body and wellhead housing to test the seal and to assure that it does not leak. If leakage occurs, additional torque can be transmitted from the running string 48 and running tool 38 to the actuator sleeve 25 to apply a greater longitudinal compressive force to the packing element 30 to stop the leak.

The blowout preventer can then be opened and the running string 48 elevated to elevate the upper portion 46 of the running tool along its lower portion 37 and to bring the inner flange 50 into engagement with the outer flange 49 which will then lift the lower portion 37 of the running tool out of the casing hanger body 15, the running tool 38 and casing string 48 then being elevated to the drilling rig, leaving the parts in the condition illustrated in FIG. 3.

A seat protector or wear bushing (not shown) may then be located in the wellhead housing to protect its inner cylindrical wall 13, and drilling of the well continued through the casing string 17.

If desired, additional casing hanger assemblies 14*a*, 14*b* can be located in the wellhead housing, each assembly supporting its casing string 17*a*, 17*b*, of an appropriate diameter, and being installed after the well bore has been drilled ahead to the desired depth. Each assembly is lowered on a running string and running tool and seated on the upper end of a previously installed casing hanger, after which each seal assembly is rotated to place it in its sealed position against the seal surfaces 22, 13, closing the circulation ports of its casing hanger body. As disclosed in FIGS. 4*a*, 4*b*, a casing hanger body 15*a* is landed on a previously installed casing hanger body 15, being centered with respect thereto by a depending centering rib 100 piloted within the upper portion of the lower casing hanger body 15, the centering rib having a downwardly tapering surface 101, engaging a companion tapered surface 102 on the upper end of the lower hanger body 15.

As disclosed by way of example in FIG. 4*a*, a third casing hanger assembly 14*b* has been installed in the well bore and is centered in the intermediate body 15*a* by means of its depending rib 100 engaging a companion tapered surface 102 at the upper end of the hanger body, the seal structure 24 on the uppermost casing hanger body 15*b* having been lowered and sealed against the surfaces 22, 13, to close the circulation path after the casing string 17*b* has been appropriately cemented in place.

Each casing hanger body has an internal flange 60 provided with a downwardly tapering shoulder 61 on which a tubing hanger T is adapted to come to rest. In general, the tubing hanger is of a known specific design, including a main body 62 having a circumferential groove 63 in its upper portion and into which latch elements of a running tool (not shown) may be retained for lowering the tubing hanger and a string of tubing 64 secured to its lower threaded box 65 in the well bore and in the casing hanger assembly 14*b*. The tubing hanger will be supported by the internal shoulder or seat 61 of the uppermost casing hanger body 15*b*. As disclosed, a lower abutment 66 having a downwardly tapering surface is adapted to engage this seat, this abutment being prevented from dropping downwardly along the body to any substantial extent by a split snap retainer ring 67 disposed in an external groove 68 in the body. An elastomer seal ring 69 rests upon the abutment ring, its upper end being engageable with a downwardly facing body shoulder 70. The tubing hanger body portion 71 above the seal ring and the abutment ring has a diameter closely approximating the inside diameter of the casing hanger body above its shoulder, the seal ring also having approximately the same diameter, or slightly less than the I.D. of the body wall 72. The casing hanger body has an outwardly directed head or flange 73 overlying the casing hanger body and provided with a depending centering rib 74 adapted to engage a companion downwardly tapering surface 102 at the upper end of the casing hanger body 15*b*.

Extending upwardly from the outer portion of its flange 73, the body comprises a sleeve portion 75 encircled by a coupling sleeve 76 having a lower internally threaded skirt 77 adapted to mesh with the exposed body threads 27. The coupling sleeve 76 has a downwardly facing shoulder 78 adapted to engage an upwardly facing shoulder 79 on the flange externally of its upwardly projecting sleeve portion 75, so as to clamp the flange 73 and the tubular hanger body 62 between the coupling sleeve shoulder 78 and the upper portion of the casing hanger body 15*b*, as a result of rotation of the coupling sleeve in the right-hand direction to mesh its skirt portion 77 with the external threads 27 on the upper portion of the hanger body 15*b* and thread it downwardly therealong to effect the clamping and retaining action of the tubing hanger body 62 against the casing hanger body 15*b*. Rotation of the coupling sleeve or nut 76 is performed by a suitable tool (not shown) which has projections fitting into axial recesses 80 opening through the upper end of the coupling nut, after the tubing hanger body has been landed on the casing hanger body 15*b*. When such landing occurs, the abutment 66 comes to rest upon the hanger body shoulder 61, the tubing hanger body then moving downwardly to a slight extent to compress the seal ring 69 between the inner wall 72 of the casing hanger body and the opposed cylindrical external surface of the tubing hanger body 62.

The coupling nut 76 may be slipped over the tubular hanger body, with its lower shoulder 78 engaging a split retainer ring 82 located in an external groove 83 in the upper portion of the sleeve 75, the shoulder 75 contracting and riding past the ring, which will then snap into an elongate circumferential groove 84 in the coupling sleeve above its shoulder 78. The coupling sleeve cannot move upwardly off the tubing hanger body by virtue of engagement of its shoulder with the retainer ring 82. However, such retainer ring 82 does not interfere with downward feeding of the coupling sleeve member 76 along the tubular hanger body 62 upon being threadedly meshed with the casing hanger body threads 27.

The specific type of tubing hanger T forms no part of the present invention. As disclosed, it includes a valve sleeve 85 disposed therewithin adapted to be releasably retained in a lower position by a suitable spring 86 on the valve sleeve engaged within an internal groove 87 in the hanger body, in which fluid can flow through the space 88 surrounding the hanger body into ports 89 above an intermediate seal assembly 90 on the valve sleeve and then into longitudinal passages 91 in the hanger body opening through its upper end. The valve sleeve has an upper seal assembly 92 engaging the inner wall of the tubing hanger body 62 above the lower end of the upper passages 91 to confine the flow of fluid to the path just referred to. By means of a suitable tool (not shown) lowered on a wire line from the drilling rig, the sleeve 85 can be pulled upwardly, its spring 86 being forced out of its companion groove 87, the sleeve being moved upwardly within the body until the intermediate seal 90 is disposed above the lower tubing hanger body ports 89 and a lower seal 93 is disposed in sealed relation against the tubing hanger body below the ports, thereby closing such ports to the flow of fluid. The valve

sleeve is releasably retained in this upper position by virtue of its spring 86 snapping into an upper internal groove 94 in the hanger body.

It is apparent that the same threaded portion 27 of the hanger body used for connecting the running tool thereto, and for effecting longitudinal shifting of the seal structure 24 between circulation path opening and closing positions, is used for locking the tubing hanger body 62 downwardly in the casing hanger body 15*b*.

It is apparent that a casing hanger apparatus has been provided, in which, regardless of the size of casing string to be suspended therefrom, the exterior of the casing hanger body and the seal structure used in connection therewith is identical, which makes it necessary to provide only one size and type of seal structure 24. The casing hanger bodies vary from one another only in connection with their inside profile and the threaded box 16 to which the suspended casing string is secured. Thus, inventory problems are greatly simplified, as well as economies of manufacture. The apparatus itself is much simpler than prior devices, while it is still capable of withstanding high fluid pressures. Bypass grooves and ports in the wellhead housing 10 are eliminated, since the wellhead housing above its lower seat provides a continuous cylindrical sealing surface 13. The running tool 38 is of comparatively simple construction and of mode of operation, being less costly to manufacture. In this connection, it is to be noted that the running tool has been illustrated in partially diagrammatic fashion, in order to simplify the illustration. It is evident that suitable joints would be provided to facilitate assembly of the upper and lower portions 46, 37 of the running tool with respect to one another.

I claim:

1. In well bore casing apparatus: an outer body having a seat therein; an inner body for suspending a tubular string in a well bore and movable into engagement with said seat; passage means for allowing fluid flow between said inner and outer bodies; a seal structure on said inner body; first means for connecting said seal structure to the exterior of said inner body, whereby rotation of said seal structure moves said seal structure longitudinally along said inner body to a position closing said passage means; a running tool connectable to a running string; second means for releasably connecting said running tool to said seal structure to support said seal structure and inner body from said running tool and thereby enable said running tool and the running string to lower said inner body and seal structure as a unit into said outer body; and third means for transmitting rotary motion of said running string to said seal structure to disconnect said second means and move said seal structure to its position closing said passage means.

2. In apparatus as defined in claim 1; said first means comprising a threaded connection between said seal structure and inner body.

3. In apparatus as defined in claim 1; said second means comprising a threaded connection between said seal structure and running tool.

4. In apparatus as defined in claim 1; said first means comprising an external thread on said inner body and a first internal thread portion on said seal structure meshing with said external thread; said second means comprising an external thread on said running tool and a second internal thread portion on said seal structure meshing therewith; rotation of said seal structure by said running tool unscrewing said second internal thread portion from said running tool and moving said seal structure to its position closing said passage means.

5. In apparatus as defined in claim 1; said first means comprising an external thread on said inner body and a first internal thread portion on said seal structure meshing with said external thread; said second means comprising an external thread on said running tool and a second internal thread portion on said seal structure meshing therewith; rotation of said seal structure by said running tool unscrewing said second internal thread portion from said running tool and moving said seal structure to its position closing said passage means; said third means comprising clutch means on said running tool meshing with clutch means on said seal structure.

6. In apparatus as defined in claim 1; said first means comprising an external thread on said inner body and an internal thread on said seal structure meshing with said external thread; said second means comprising an external thread on said running tool meshing with said internal thread; rotation of said seal structure by said running tool unscrewing said internal thread from said running tool and moving said seal structure to its position closing said passage means.

7. In apparatus as defined in claim 1; said first means comprising an external right-hand thread on said inner body and an internal right-hand thread on said seal structure meshing with said external thread; said second means comprising an external right-hand thread on said running tool meshing with said internal thread; right-hand rotation of said seal structure by said running tool unscrewing said internal thread from said running tool and moving said seal structure downwardly along said inner body to its position closing said passage means.

8. In apparatus as defined in claim 1; said first means comprising an external right-hand thread on said inner body and an internal right-hand thread on said seal structure meshing with said external thread; said second means comprising an external right-hand thread on said running tool meshing with said internal thread; right-hand rotation of said seal structure by said running tool unscrewing said internal thread from said running tool and moving said seal structure downwardly along said inner body to its position closing said passage means; said third means comprising clutch means on said running tool meshing with clutch means on said seal structure for transmitting rotary motion of said running tool to said seal structure.

9. In well bore casing apparatus: an outer body having a seat therein; an inner body for suspending a tubular string in a well bore and movable into engagement with said seat; passage means for allowing fluid flow between said inner and outer bodies; a seal structure on said inner body; first means for connecting said seal structure to the exterior of said inner body, whereby rotation of said seal structure moves said seal structure longitudinally along said inner body to a position closing said passage means; a running tool comprising a first portion connectable to a running string and a second portion swivelly related to said first portion; second means for releasably connecting said second portion to said seal structure; and third means for transmitting rotary motion of said first portion to said seal structure to disconnect said second means and move said seal structure to its position closing said passage means.

10. In apparatus as defined in claim 9; said first means comprising a threaded connection between said seal structure and inner body.

11. In apparatus as defined in claim 9; said second means comprising a threaded connection between said seal structure and said second portion of said running tool.

12. In apparatus as defined in claim 9; said first means comprising an external thread on said inner body and a first internal thread portion on said seal structure meshing with said external thread; said second means comprising an external thread on said second portion of said running tool and a second internal thread portion on said seal structure meshing therewith; rotation of said seal structure by said first portion of said running tool unscrewing said second internal thread portion from said second portion of said running tool and moving said seal structure to its position closing said passage means.

13. In apparatus as defined in claim 9; said first means comprising an external thread on said inner body and a first internal thread portion on said seal structure meshing with said external thread; said second means comprising an external thread on said second portion of said running tool and a second internal thread portion on said seal structure meshing therewith; rotation of said seal structure by said first portion of said running tool unscrewing said second internal thread portion from said second portion of said running tool and moving said seal structure to its position closing said passage means;

said third means comprising clutch means on said first portion of said running tool meshing with clutch means on said seal structure.

14. In apparatus as defined in claim 9; said first means comprising an external thread on said inner body and an internal thread on said seal structure meshing with said external thread; said second means comprising an external thread on said second portion of said running tool meshing with said internal thread; rotation of said seal structure by said first portion of said running tool unscrewing said internal thread from said second portion of said running tool and moving said seal structure to its position closing said passage means.

15. In apparatus as defined in claim 9; said first means comprising an external right-hand thread on said inner body and an internal right-hand thread on said seal structure meshing with said external thread; said second means comprising an external right-hand thread on said second portion of said running tool meshing with said internal thread; right-hand rotation of said seal structure by said first portion of said running tool unscrewing said internal thread from said first portion of said running tool and moving said seal structure downwardly along said inner body to its position closing said passage means.

16. In apparatus as defined in claim 9; said first means comprising an external right-hand thread on said inner body and an internal right-hand thread on said seal structure meshing with said external thread; said second means comprising an external right-hand thread on said second portion of said running tool meshing with said internal thread; right-hand rotation of said seal structure by said first portion of said running tool unscrewing said internal thread from said first portion of said running tool and moving said seal structure downwardly along said inner body to its position closing said passage means; said third means comprising clutch means on said first portion of said running tool meshing with clutch means on said seal structure.

* * * * *