(19) Europäisches Patentamt
European Patent Office
Office européen des brevets

(11) EP 0 578 711 B1

(12) **EUROPEAN PATENT SPECIFICATION**

(45) Date of publication and mention of the grant of the patent:
25.06.1997 Bulletin 1997/26

(21) Application number: **92908082.8**

(22) Date of filing: **07.04.1992**

(51) Int. Cl.[6]: **B65D 17/00**

(86) International application number:
PCT/GB92/00623

(87) International publication number:
WO 92/17376 (15.10.1992 Gazette 1992/26)

(54) A CONTAINER FOR BEER AND OTHER BEVERAGES

BEHAELTER FUER BIER UND ANDERE GETRAENKE

RECIPIENT POUR BIERE ET AUTRES BOISSONS

(84) Designated Contracting States:
AT BE CH DE DK ES FR GB GR IT LI LU MC NL SE

(30) Priority: **08.04.1991 GB 9107387**
27.03.1992 GB 9206858

(43) Date of publication of application:
19.01.1994 Bulletin 1994/03

(73) Proprietors:
- **PARKES, Judith Margaret**
  Tealby, Lincolnshire LN8 3XL (GB)
- **SEARLE, Matthew John**
  London E14 0BU (GB)
- **TAFT, Carden Harper**
  London NW3 4LY (GB)

(72) Inventors:
- **SEARLE, Matthew John**
  Hale Street, London E14 0BU (GB)
- **TAFT, Carden Harper**
  London NW3 4LY (GB)
- **PARKES, Simon**
  London NW3 4LY (GB)

(74) Representative: **Needle, Jacqueline**
W.H. BECK, GREENER & CO
7 Stone Buildings
Lincoln's Inn
London WC2A 3SZ (GB)

(56) References cited:
EP-A- 0 302 952
FR-A- 2 276 226

Note: Within nine months from the publication of the mention of the grant of the European patent, any person may give notice to the European Patent Office of opposition to the European patent granted. Notice of opposition shall be filed in a written reasoned statement. It shall not be deemed to have been filed until the opposition fee has been paid. (Art. 99(1) European Patent Convention).

EP 0 578 711 B1

Description

The present invention relates to a container for beer and other beverages.

It is difficult to serve a large number of people in a short time with beverages where that beverage has to be dispensed from a container, such as a can or bottle, into a drinking vessel. The problem is exacerbated at large public venues, for example public concerts, where it is illegal to give customers cans or bottles, and beverages have to be served in plastics containers.

EP-A-302952 describes a container for beer and other beverages, comprising a body member having an opening at one end thereof, and a removable end closure member closing said opening, wherein said body member is made of plastics material and is sufficiently strong to contain a beer or other carbonated beverage, and said body member is shaped and configured to define a drinking vessel and said opening defines an unrestricted mouth opening of the drinking vessel, and wherein said end closure member is completely removable to thereby reveal said unrestricted mouth opening.

However, the container described in EP-A-302952 does not address the dispensing problems described.

The present invention seeks to overcome the dispensing problems identified above.

According to the present invention a container as defined above is characterised in that said end closure member is a lid having an internal screw thread, and an external screw thread is formed on said body member proximate said opening for engagement with the internal screw thread of said lid, and in that said external screw thread extends around said body member spaced from the opening thereof to thereby define a plain mouth opening.

A container of the invention is intended to be filled with beer or another beverage and closed by the application of the lid thereto. Then, to dispense the beverage, it is necessary only to remove the lid to thereby provide a drinking vessel filled with the beverage. There is no need to dispense the beverage from the container into another vessel.

The plain mouth opening defines a rim from which the contents of the container may be drunk.

The body member is made of a plastics material. A container of the invention is therefore ideal for use at public venues where plastics containers have to be provided for all beverages.

Beer is traditionally sold in glass bottles or metal cans. This is because most plastics cans and other plastics containers are not suitable for containing beer. The conventional plastics containers are generally unable to withstand the pressure of the beer, and/or they are permeable to gas, particularly to oxygen, such that the beer degrades from an ingress of gas.

In a preferred embodiment, said body member is fabricated from at least two plastics materials, the first plastics material being able to impart structural rigidity and the ability to withstand pressure to the body member, and the second plastics material being arranged to provide a barrier to the passage of gas.

Where the container is to hold beer or other carbonated beverages, said first plastics material is preferably arranged to withstand pressures up to approximately 420kPa.

In a preferred embodiment said first plastics material is polyethylene terephthalate (PET).

Preferably, said second plastics material is nylon.

In a preferred embodiment, said body member is formed from a layered construction of said at least two plastics materials. This layered construction enables two or more plastics materials to be selected to enable the containers fabricated therefrom to meet a number of predetermined, particular requirements.

The plastics materials from which the container is constructed may be arranged in adjacent layers which are fastened together and/or the layers may be laminated. A more intimate construction may involve the combination of the plastics materials at molecular level.

Where the container is to hold beer or other carbonated beverages, the closed end of said container opposed to said one end is preferably curved to extend inwardly of said body member. This construction enhances the pressure rating of the closed end of said container.

Preferably, the lid of said container is fabricated from the same material as said body member.

It is, of course, possible to manufacture the body member to have thereon information as to its contents and their provenance. However, in a preferred embodiment, the body member is enclosed by a shrink wrap layer, preferably incorporating a label. This label may give details not only of the contents of the container, but may also be customised to relate to the particular venue or occasion on which the beverages are being dispensed.

The present invention also extends to a method of dispensing beer and other beverages comprising the steps of packaging the beverage to be dispensed in a container as defined above, and subsequently removing and discarding said end closure member to provide a drinking vessel containing the beverage ready for consumption.

One embodiment of the present invention will hereinafter be described, by way of example, with reference to the accompanying drawings, in which:

Figure 1 shows an end elevation of a beer container different from that of the invention,

Figure 2 shows the container of Figure 1 as it is being opened,

Figure 3 is a top plan view of the container of Figures 1 and 2 showing an end closure member thereof,

Figure 4 shows the container of Figures 1 and 2 after the removal of the end closure,

Figure 5 shows an end elevation of a beer container different from that of the invention, and

Figure 6 shows an embodiment of a container of the invention.

Figures 1 and 5 show containers for beer and other beverages which are outside the scope of the claims of this application. However, these containers are illustrated and described as they aid in the understanding of the present invention.

Figures 1 to 4 show an example of a beer can of plastics material for use for dispensing beer. In this respect, the beer can comprises a substantially cylindrical body member 2 of plastics material having a closed end 4 and a generally circular opening 6 at the end thereof opposed to said closed end 4. A generally planar, circular end closure member 10 is provided to close the opening 6 of the body member 2, and thereby seal the can. In this respect, the end closure member 10 is made of a metal or metal foil and, in its closed position, is sealed to a rim 8 by way of a circumferential tearing denotation 14 which extends completely around the periphery of the end closure member 10. The rim 8 is fastened to the opening 6 of the body member 2. A ring pull 12 is fastened to the closure member 10 in known manner.

In use, beer is filled into the plastics material body member 2. The closure member 10 is preferably formed in one piece with the rim 8 and the tearing denotation 14, and the rim 8 is then heat sealed onto the opening 6 of the body member 2 to close and seal the filled can. When access to the contents of the can is required, the end closure member 10 is removed by tearing along the circumferential tearing denotation 14 to thereby remove the whole of the end closure member 10. The rim 8 then defines a mouth opening for the body member 2. When the closure member 10 has been removed, the body member 2 and the rim 8 thereof together define a drinking vessel.

Drinking vessels which are to be used at large public venues or events have to be made of plastics material. Accordingly, the body member 2 of the can is made of plastics material, for example, of polyethylene terephthalate (PET). However, although this plastics material is able to withstand the pressure applied thereto by beer, it is permeable to various gases including oxygen. Accordingly, the PET is preferably coated, at least on the outside thereof, with a gas barrier layer. In a preferred embodiment, the PET and gas barrier are laminated. The gas barrier layer may, for example, be a layer of nylon.

A beer can, for example, as illustrated in Figures 1 and 4, has to withstand pressures of the order of approximately 420kPa. This pressure is within the capabilities of PET. Furthermore, the PET has sufficient rigidity to enable filled cans to be stacked one on the other, or on pallets, for storage and transportation.

It will be seen that the body member 2 of the can illustrated in Figures 1 to 4 has a closed end surface 4 thereof which is curved inwardly. This is advantageous as it enhances the pressure withstanding capability, at least of the closed end.

In Figure 1, the body member 2 is shown with a shrink wrap label 16 applied therearound. Preferably, this shrink wrapped label 16 is printed with information not only about the contents of the can, but also about the venue and event.

It will be appreciated that although the removal of the end closure member 10 reveals an unrestricted mouth opening defined by the rim 8, this rim may be less than pleasant to drink from, particularly if it is made of metal. The rim 8 is therefore preferably made of a plastics material.

Alternatively, the closure member 10 and the surrounding rim 8 may be made of a metal foil interposed between two layers of plastics material. In this manner, the rim 8 defining the mouth opening is effectively a plastics rim to someone drinking from the can.

Figure 5 shows an alternative example of a beer container. In the embodiment of Figure 5, a plastics material body member 20, substantially in the shape of a traditional beer glass, is provided with an closure member 22. The closure member 22 is connected to the end opening of the body member 20 by way of a circumferential tear strip 24 which extends completely around the perimeter of said end closure member 22. It will be appreciated that when said tear strip 24 is removed, the end closure member 22 is also completely removed, and a plain mouth opening of said container 20 is defined thereby. To facilitate the removal of the tear strip 24, a ring pull or other opening means 26 extends from the tear strip 24 and is integrally formed therewith.

Figure 6 shows an embodiment of a container of the present invention. In this container the body member 120 is formed of plastics material in the shape of a beer glass. At its open end, the body member 120 has a mouth opening 122. An interrupted external screw thread 124 is provided on the body member 120, but is spaced from the mouth opening 122 so that the area of the mouth opening 122 remains plain. The container is also provided with a lid 126 having an internal screw thread (not shown) arranged to engage the screw thread 124. Thus, when the body member 120 has been filled, the lid 126 is engaged thereon by engaging the screw threads by screwing. When it is required to have access to the contents of the container, the lid 126 is removed and may be discarded. Preferably, the lid 126 and the body member 120 are fabricated from the same material, for example, a laminated or layered plastics material as discussed above.

The external screw thread 124 on the body member 120 is advantageous as it imparts stiffness thereto. Thus, the presence of the screw thread 124 enables the material of the body member 120 adjacent the mouth opening 122 to be kept thin, if required, to enhance the acceptability of the body member 120 as a drinking vessel.

In the embodiment described and illustrated in Figure 6, the container has a substantially circular cross-section. Whilst this is generally preferred, it is, of course,

possible for containers of the invention to have any required cross-sectional shape.

The containers illustrated have been described specifically as containers for beer. It will be appreciated that they may be utilised to contain any contents required. In this respect, it may be wished to make the particular shape of the body member, for example, to ape the traditional shape of a drinking vessel for the contents. For example, if required, where a container of the invention is for storing and dispensing wine, the plastics material body member may be in the shape of a stemmed wine glass.

It will be appreciated that modifications and variations may be made to the embodiment of the invention described and illustrated within the scope of the appended claims.

Claims

1. A container for beer and other beverages, comprising a body member (120) having an opening (122) at one end thereof, and a removable end closure member (126) closing said opening, wherein said body member (120) is made of plastics material and is sufficiently strong to contain a beer or other carbonated beverage, and said body member is shaped and configured to define a drinking vessel and said opening defines an unrestricted mouth opening of the drinking vessel, and wherein said end closure member (126) is completely removable to thereby reveal said unrestricted mouth opening (122), characterised in that said end closure member is a lid (126) having an internal screw thread, and an external screw thread (124) is formed on said body member (120) proximate said opening for engagement with the internal screw thread of said lid, and in that said external screw thread (124) extends around said body member (120) spaced from the opening (122) thereof to thereby define a plain mouth opening.

2. A container as claimed in Claim 1, wherein said lid (126) is fabricated from the same material as said body member (120).

3. A container as claimed in Claim 1 or Claim 2, wherein said body member (120) is fabricated from at least two plastics materials, the first plastics material being able to impart structural rigidity and the ability to withstand pressure to the body member, and the second plastics material being arranged to provide a barrier to the passage of gas.

4. A container as claimed in Claim 3, wherein said first plastics material is arranged to withstand pressures up to approximately 420kPa.

5. A container as claimed in Claim 3 or 4, wherein said first plastics material is polyethylene terephthalate.

6. A container as claimed in any of Claims 3 to 5, wherein said second plastics material is nylon.

7. A container as claimed in any of Claims 3 to 6, wherein said body member (120) is formed from a layered construction of said at least two plastics materials.

8. A container as claimed in any preceding claim, wherein the closed end of said container opposed to said one end is curved to extend inwardly of said body member (120).

9. A container as claimed in any preceding claim, wherein the body member (120) is enclosed by a shrink wrap layer.

10. A container as claimed in Claim 9, wherein said shrink wrap layer incorporates a label.

11. A method of dispensing beer and other beverages comprising the steps of packaging the beverage to be dispensed in a container as claimed in any of the preceding claims with the end closure member closing the container, and subsequently removing and discarding said end closure member to provide a drinking vessel containing said beverage ready for consumption.

Patentansprüche

1. Behälter für Bier oder andere Getränke, mit einem Körperteil (120), das eine Öffnung (122) an einem Ende davon hat, und mit einem entfernbaren Endverschlußteil (126), das die Öffnung verschließt, wobei das Körperteil (120) aus Kunststoffmaterial hergestellt und hinreichend stark ist, um Bier oder ein anderes kohlensäurehaltiges Getränk zu enthalten, und wobei das Körperteil geformt und konfiguriert ist, um ein Trinkgefäß zu bilden und wobei die Öffnung eine hindernisfreie Mundöffnung für das Trinkgefäß bildet und wobei das Endverschlußteil (126) vollständig entfernbar ist, um dadurch die hindernisfreie Mundöffnung (122) freizugeben, **daduch gekennzeichnet,** daß das Endverschlußteil ein Deckel (126) ist, der ein Innengewinde hat, und daß ein Außengewinde (124) auf dem Körperteil (120) in der Nähe der Öffnung zum Eingriff mit dem Innengewinde des Deckels gebildet ist, und daß das Außengewinde (124) um das Körperteil (120) im Abstand von der Öffnung (122) verläuft und dadurch eine glatte Mundöffnung bildet.

2. Behälter nach Anspruch 1, wobei der Deckel (126) aus dem gleichen Material wie das Körperteil (120) gebildet ist.

3. Behälter nach Anspruch 1 oder 2, wobei das Körperteil (120) aus mindestens zwei Kunststoffen

gebildet ist, wobei der erste Kunststoff eine Formfestigkeit verleiht und dem Körperteil Druckfestigkeit gibt und wobei der zweite Kunststoff eine Barriere für den Durchtritt von Gas bildet.

4. Behälter nach Anspruch 3, wobei der erste Kunststoff so angeordnet ist, daß er einem Druck bis zu etwa 420 kPa standhält.

5. Behälter nach Anspruch 3 oder 4, wobei das erste Kunststoffmaterial Polyethylen-Terephthalat ist.

6. Behälter nach einem der Ansprüche 3-5, wobei das zweite Kunststoffmaterial Nylon ist.

7. Behälter nach einem der Ansprüche 3-6, wobei das Körperteil (120) aus einer mehrschichtigen Konstruktion aus den mindestens zwei Kunststoffen gebildet ist.

8. Behälter nach einem der vorhergehenden Ansprüche, wobei das geschlossene Ende des Behälters gegenüber von dem einen Ende gekrümmt ist, um sich nach innen in das Körperteil (120) zu erstrekken.

9. Behälter nach einem der vorhergehenden Ansprüchen, wobei das Körperteil, (120) von einer Schrumpfwickelfolie eingeschlossen ist.

10. Behälter nach Anspruch 9, wobei die Schrumpfwikkelfolie ein Etikett aufweist.

11. Verfahren zum Ausschenken von Bier und anderen Getränken, mit den Schritten des Verpackens des auszuschenkenden Getränks in einem Behälter nach einem der vorhergenden Ansprüche, wobei das Endverschlußteil den Behälter verschließt, und anschließendes Abnehmen und Wegwerfen des Endverschlußteils, um ein Trinkgefäß zu schaffen, daß das zum Verzehr bereite Gertänk enthält.

Revendications

1. Récipient pour bière et autres boissons, comprenant un élément formant corps (120) qui présente une ouverture (122) à l'une de ses extrémités, et un élément amovible de fermeture d'extrémité (126) qui obture ladite ouverture, dans lequel ledit élément formant corps (120) est fait de matière plastique et est suffisamment robuste pour contenir une bière ou une autre boisson gazeuse, et ledit élément formant corps a une forme et une configuration telles qu'il constitue un récipient pour boire et que ladite ouverture de ce dernier constitue une ouverture libre à porter à la bouche, et dans lequel ledit élément de fermeture d'extrémité (126) peut être enlevé complètement pour dégager ainsi ladite ouverture libre (122) à porter à la bouche, caractérisé en ce que ledit élément de fermeture d'extrémité est un couvercle (126) comportant un filetage intérieur, un filetage extérieur (124) étant formé sur ledit élément formant corps (120) à proximité de ladite ouverture pour entrer en prise avec le filetage intérieur dudit couvercle, et en ce que ledit filetage extérieur (124) s'étend autour dudit élément formant corps (120) à une certaine distance de l'ouverture (122) de celui-ci, afin qu'il soit ainsi défini une ouverture lisse à porter à la bouche.

2. Récipient selon la revendication 1, dans lequel ledit couvercle (126) est fabriqué en la même matière que ledit élément formant corps (120).

3. Récipient selon la revendication 1 ou 2, dans lequel ledit élément formant corps (120) est fabriqué en au moins deux matières plastiques, la première matière plastique étant capable de conférer, à l'élément formant corps, une rigidité structurelle et la capacité de résister à la pression, et la seconde matière plastique étant disposée de manière à former une barrière qui s'oppose au passage de gaz.

4. Récipient selon la revendication 3, dans lequel ladite première matière plastique est propre à résister à des pressions allant jusqu'à 420 kPa environ.

5. Récipient selon la revendication 3 ou 4, dans lequel ladite première matière plastique est du poly (éthylène téréphtalate).

6. Récipient selon l'une quelconque des revendications 3 à 5, dans lequel ladite seconde matière plastique est du nylon.

7. Récipient selon l'une quelconque des revendications 3 à 6, dans lequel ledit élément formant corps (120) est formé à partir d'un stratifié desdites deux matières plastiques au moins.

8. Récipient selon l'une quelconque des revendications 1 à 7, dans lequel l'extrémité fermée dudit récipient, opposée à ladite extrémité munie de l'ouverture, est incurvée et s'étend vers l'intérieur dudit élément formant corps (120).

9. Récipient selon l'une quelconque des revendications 1 à 8, dans lequel ledit élément formant corps (120) est entouré par une couche d'emballage par rétraction.

10. Récipient selon la revendication 9, dans lequel une étiquette est incorporée dans ladite couche d'emballage par rétraction.

11. Procédé de distribution de bière et d'autres boissons, comprenant les étapes consistant à emballer la boisson à distribuer dans un récipient selon l'une

quelconque des revendications 1 à 10, l'élément de fermeture d'extrémité fermant le récipient, puis à détacher et à jeter ledit élément de fermeture d'extrémité pour mettre à disposition un récipient pour boire qui contient ladite boisson prête à la consommation.

FIG. 1

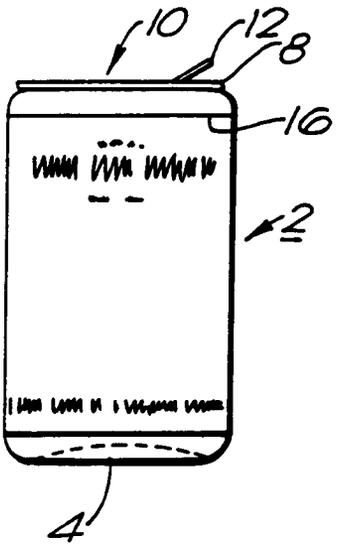

FIG. 2

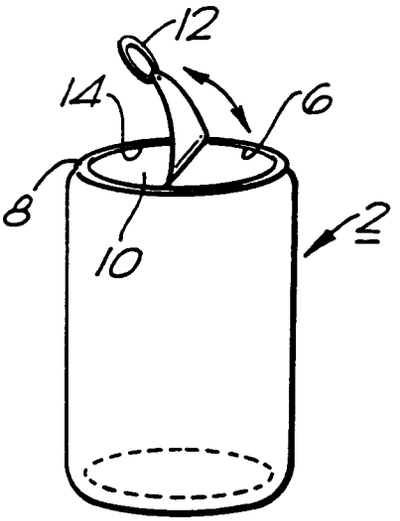

FIG. 3

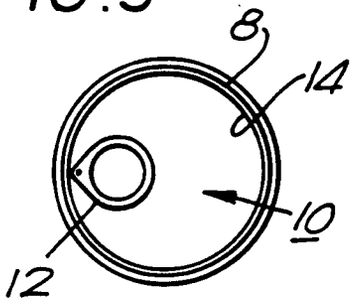

FIG. 4

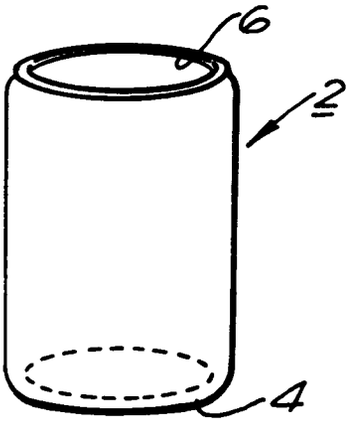

FIG. 5

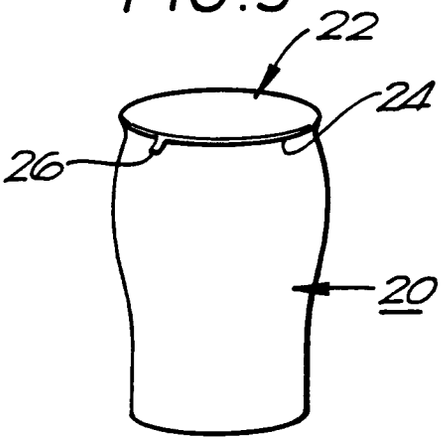

FIG. 6

