W. F. BLEECKER.

CARTRIDGE FUSE.

APPLICATION FILED NOV. 18, 1915.

1,221,275. Patented Apr. 3, 1917.

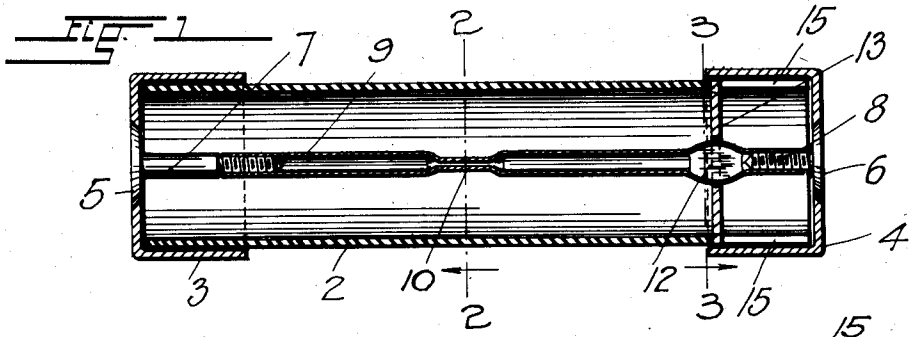

Fig. 1

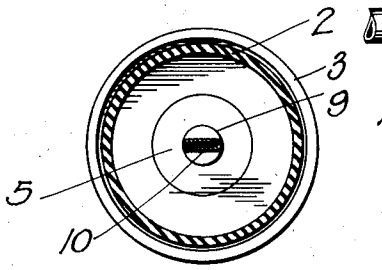

Fig. 2

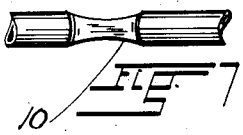

Fig. 7

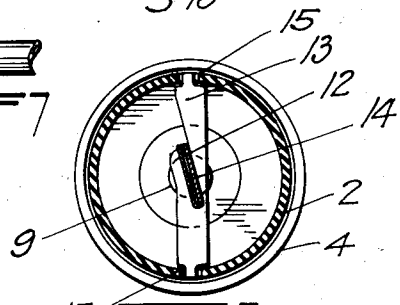

Fig. 3

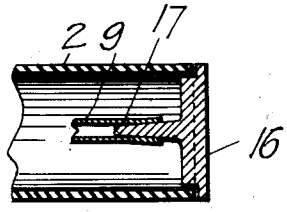

Fig. 4

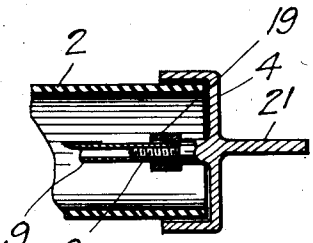

Fig. 5

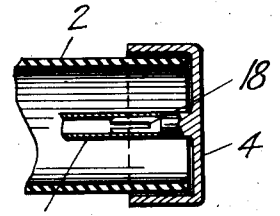

Fig. 6



Fig. 8



Fig. 9

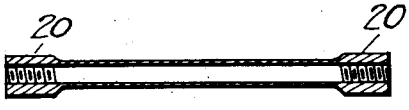

Fig. 10

WITNESSES:

F. H. Cuno.

L. Rhoades

INVENTOR.

W. F. Bleecker.

BY

ATTORNEY.

UNITED STATES PATENT OFFICE.

WARREN F. BLEECKER, OF WASHINGTON, PENNSYLVANIA.

CARTRIDGE-FUSE.

1,221,275. Specification of Letters Patent. Patented Apr. 3, 1917.

Application filed November 18, 1915. Serial No. 62,213.

To all whom it may concern:

Be it known that I, WARREN F. BLEECKER, a citizen of the United States, residing at Washington, in the county of Washington and State of Pennsylvania, have invented certain new and useful Improvements in Cartridge-Fuses, of which the following is a specification.

My invention relates to cartridge fuses, and its primary object resides in providing a fuse plug which is constructed to receive fuses of predetermined size and design only, and which thus prevents the replacement of a burnt-out fuse by copper wire or other make-shift, or by a fuse of a different size or current-carrying capacity.

Another object of my invention resides in providing a fuse-plug the parts of which are readily adjusted for replacing a fuse without the use of tools.

With the above and other objects in view, all of which will fully appear in the course of the following description, my invention comprises a replaceable fuse which is partially or entirely hollow to provide at its extremities, sockets for its attachment to suitable closures applied at the ends of a preferably tubular casing.

The said closures are to this end provided with male fastening members adapted to enter the sockets of the fuse and secure the latter within the casing.

It will be readily understood that within the spirit of my invention as outlined above, many different methods of construction may be resorted to without departing from the principle of the same, and by virtue of this I have shown in the accompanying drawings, several forms of the fuse and the means for securing the same within the casing of the plug.

In the drawings in the various views of which like parts are similarly designated,

Figure 1 is an axial section of the improved cartridge fuse in its preferred form,

Fig. 2, a transverse section along the line 2—2, Fig. 1,

Fig. 3, a similar section taken along the line 3—3, Fig. 1,

Figs. 4, 5 and 6, sectional views of an end of the cartridge fuse showing different methods of constructing the closure thereof,

Fig. 7, a fragmentary elevation of the central portion of the fuse shown in Fig. 1, and Figs. 8, 9 and 10, sectional views of modified forms of the fuse used in connection with the plug.

Referring first to Figs. 1, 2 and 3 of the drawings, my improved cartridge fuse comprises a casing 2 of pressed paper, fiber or other suitable nonconductive material which for purposes of strength and convenience in manufacture, is preferably made tubular in form.

Metallic caps 3 and 4 fitting snugly over the ends of the casing have central countersunk openings to receive the correspondingly beveled heads 5 and 6 of pins 7 and 8 which when the parts are assembled extend axially within the casing. One of the pins, 8, is shorter than the other and provided with screw threads along its entire extent, whereas the other longer pin, 7, is but partially threaded for purposes hereinafter to be explained.

The fuse 9 is made of tubular metal interiorly threaded at its extremities to coöperate with the threaded pins on the caps.

The tubular fuse is flattened at a point intermediate of its extremities, and the flattened portion 10 is reduced in width to provide a weakened section of increased resistance which determines the carrying capacity of the fuse.

Inasmuch as the reduced section weakens the fuse at this point, it is desirable to provide means which compensate for the lessened torsional strength of the tube, by holding it against rotation while the parts are being assembled.

With this end in view, the tube is flattened near one of its extremites, as at 12, and the tubular casing is at its corresponding end, longitudinally slotted at diametrically opposite points to slidingly admit the extremities of a member 13 which is slotted at 14 to receive the flattened portion 12 of the fuse.

In assembling the parts of the cartridge fuse, the fuse 9 is screwed onto the threaded pin of the cap 3, and the latter is placed over the end of the casing. At the same time, the flattened portion of the fuse is placed within the slot of the transverse member 13.

After the cap 3, and the fuse are in their proper positions, the cap 4 is moved onto the opposite end of the tube-holder by screwing its threaded pin in the corresponding end of the fuse which is held axially within the casing.