Aug. 12, 1930. J. D. FEHER 1,772,990

SOUND RECORDING APPARATUS

Filed Feb. 23, 1926 4 Sheets-Sheet 1

Fig. 1

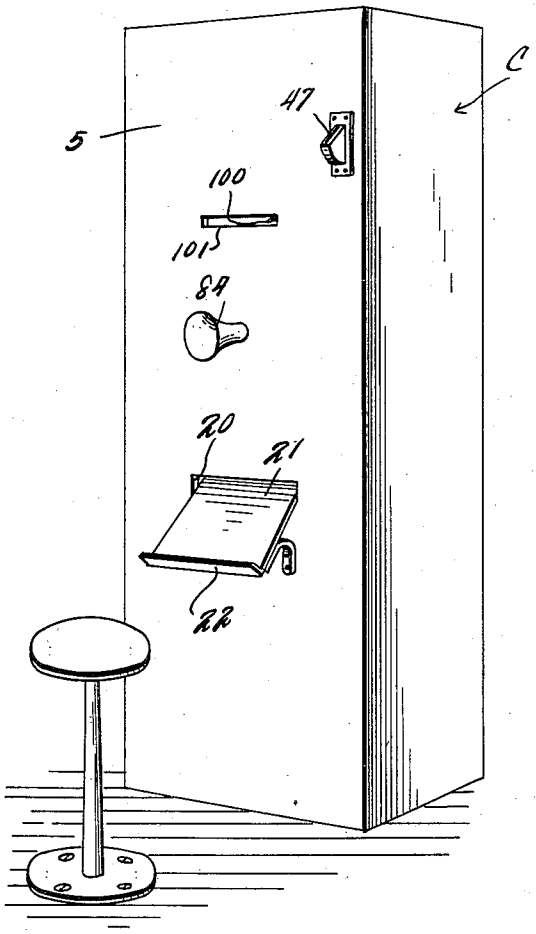

Fig. 2

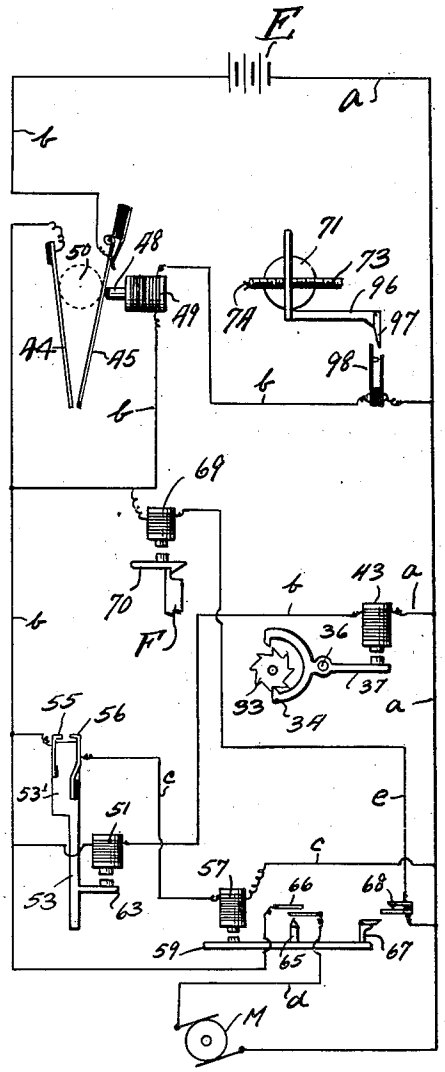

Fig. 7

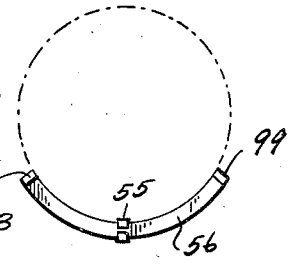

Fig. 7a

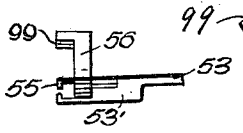

Inventor

J. D. Feher

By Watson & Coleman

Attorney

Aug. 12, 1930. J. D. FEHER 1,772,990

SOUND RECORDING APPARATUS

Filed Feb. 23, 1926 4 Sheets-Sheet 2

Fig. 3

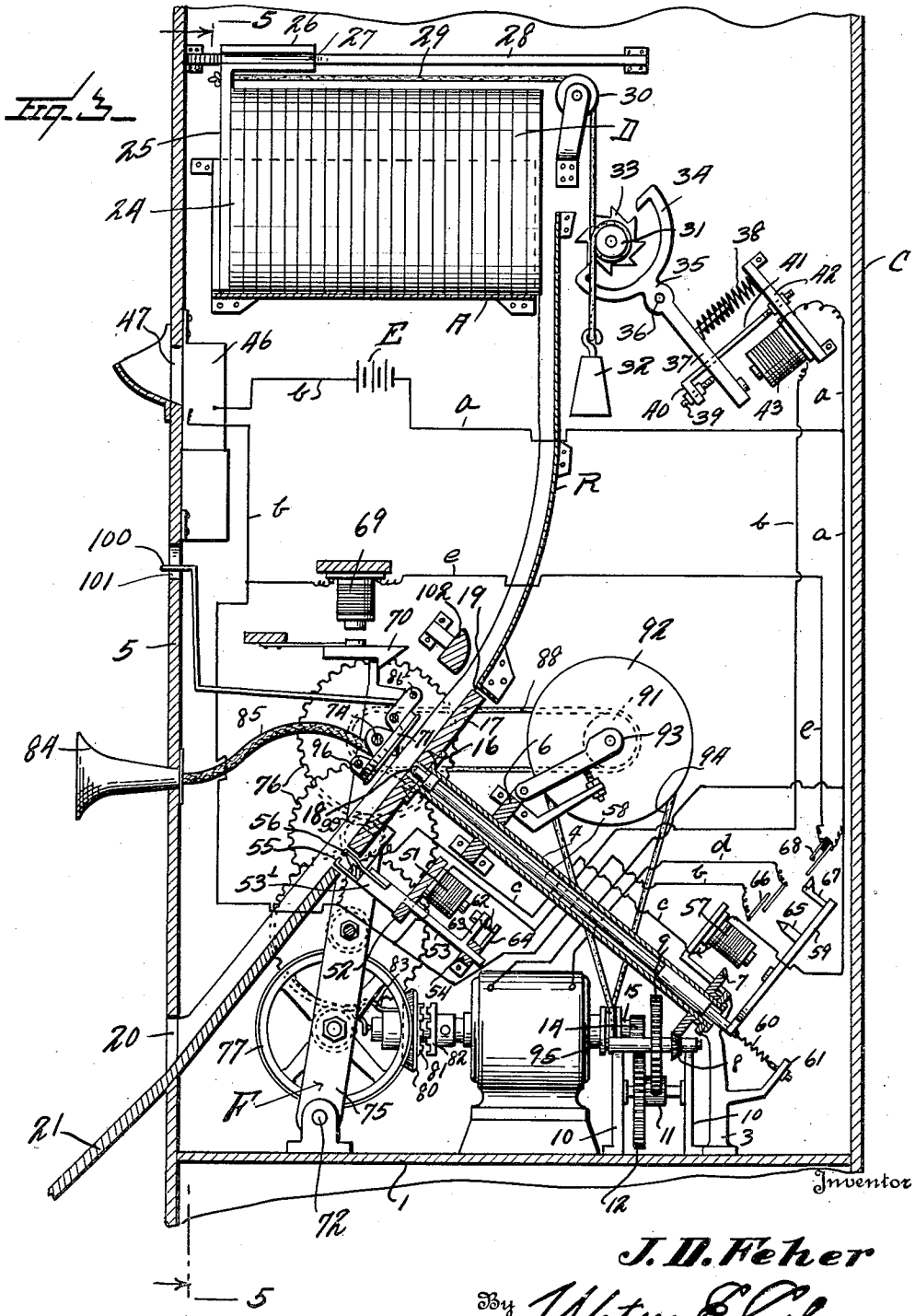

Inventor

J. D. Feher

By Watson E. Coleman

Attorney

Aug. 12, 1930. J. D. FEHER 1,772,990

SOUND RECORDING APPARATUS

Filed Feb. 23, 1926 4 Sheets-Sheet 3

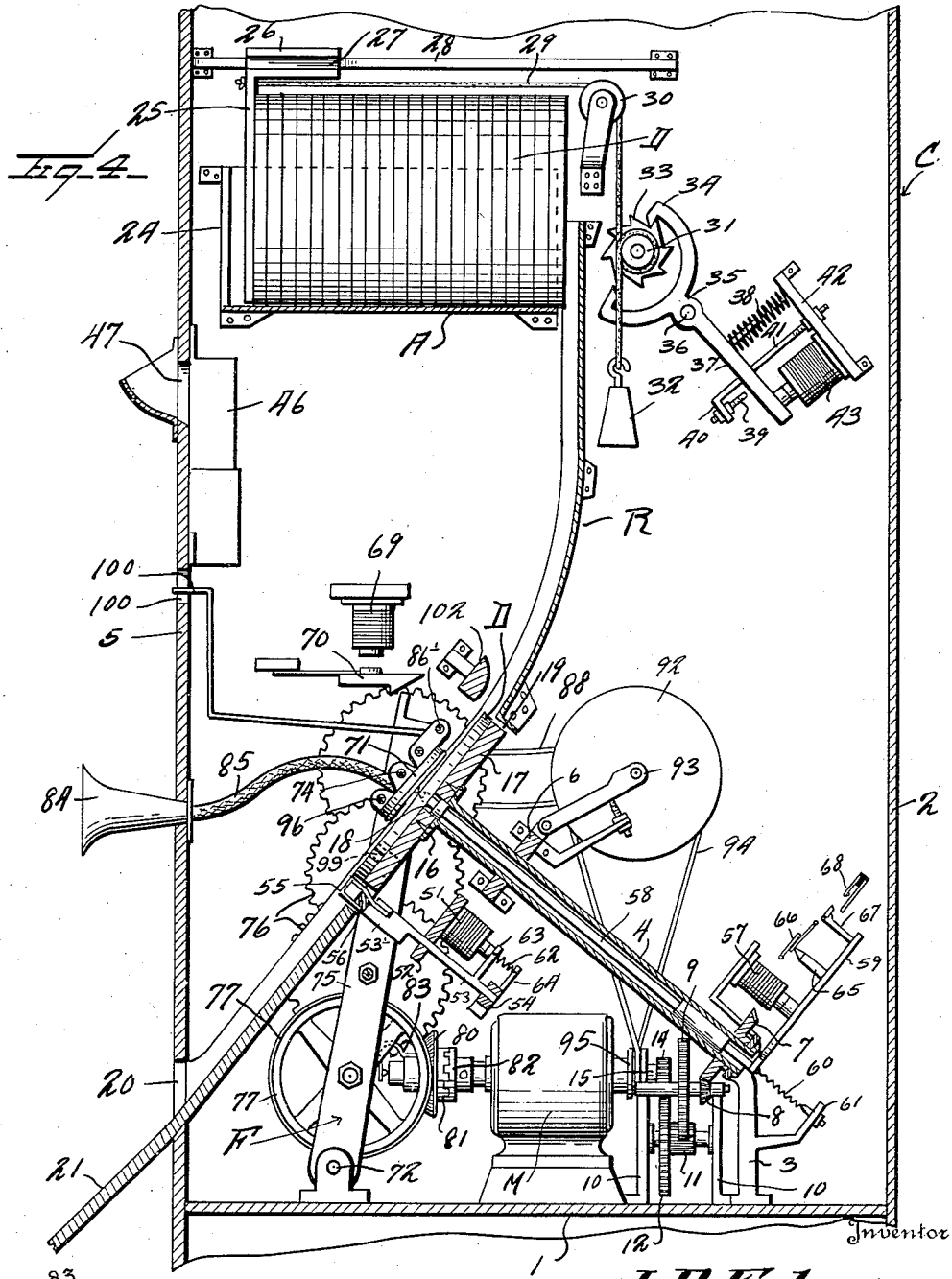

Fig. 4.

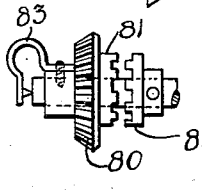

Fig. 8.

Inventor
J. D. Feher
By Watson E. Coleman
Attorney

Aug. 12, 1930. J. D. FEHER 1,772,990

SOUND RECORDING APPARATUS

Filed Feb. 23, 1926 4 Sheets-Sheet 4

Fig. 5.

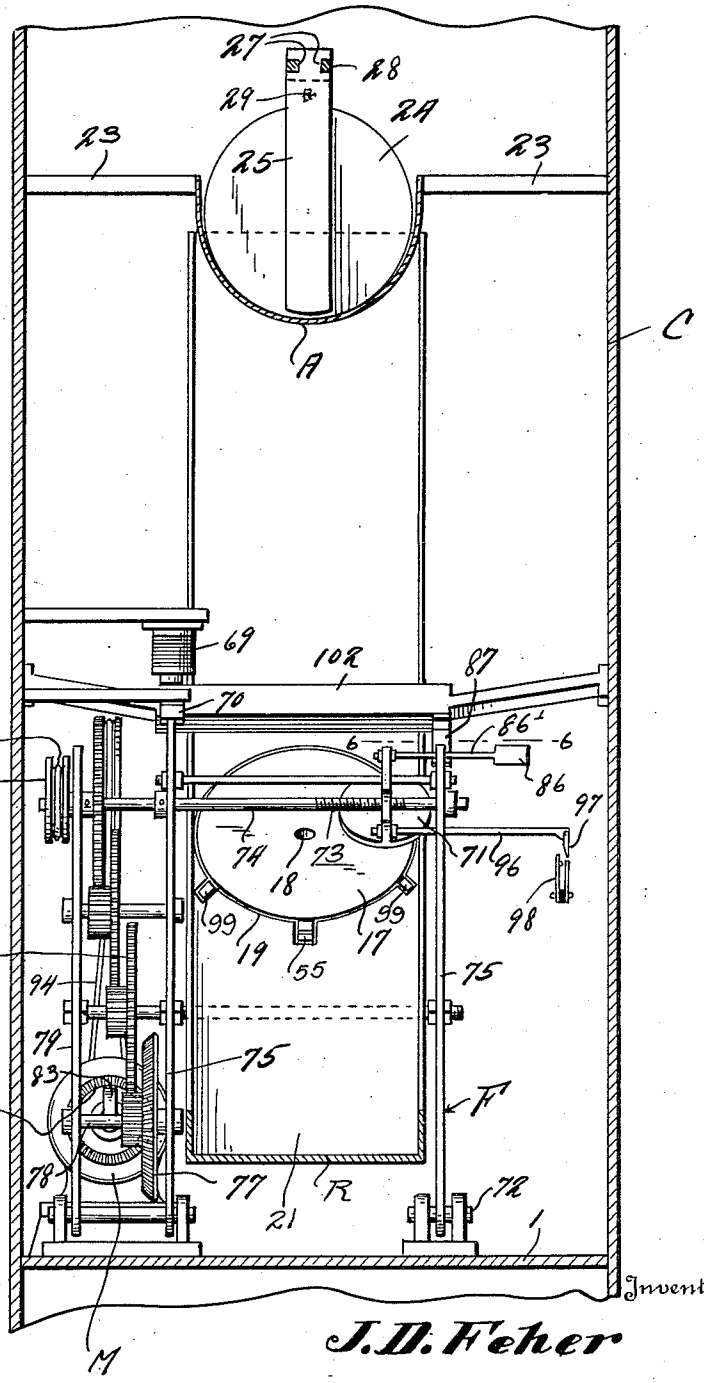

Fig. 6.

Inventor

J. D. Feher

By Watson E. Coleman

Attorney

Patented Aug. 12, 1930 1,772,990

UNITED STATES PATENT OFFICE

JOSEPH D. FEHER, OF MIAMI, FLORIDA

SOUND-RECORDING APPARATUS

Application filed February 23, 1926. Serial No. 90,130.

This invention relates to sound recording apparatus and it is an object of the invention to provide an apparatus of this kind wherein the operation is under check control and which provides an effective mechanism whereby a spoken message may be recorded upon a disc or record blank, the blank or disc being automatically discharged.

Another object of the invention is to provide an apparatus of this kind operating under check control in an automatic manner to record and to deliver in the form of a record disc or the like a message or other sound and which disc or record member is adapted to be transmitted through the mails or otherwise transported whereby is obviated the necessity of writing a letter or utilizing the services of a public stenographer as is now generally done by salesmen and other persons whose duties require them to travel and to make reports daily or at other periods of time.

It is also an object of the invention to provide an apparatus of this kind comprising a turn table having associated therewith a magazine for record blanks or discs, together with means under control of a coin or check for causing a disc record blank to be delivered from the magazine in proper position upon the turn table and to effect the requisite rotation of the table, and to bring a sound recording mechanism in working contact with the record blank on the table.

An additional object of the invention is to provide an apparatus of this kind comprising a table adapted, under the influence of a coin or other check, to be rotated for a predetermined period of time together with automatic means functioning during the period the apparatus is in operation to properly position a recording disc or other member upon the table and to bring a recording mechanism in requisite engagement with such disc or member and wherein the disc or recording member is automatically discharged or ejected when the apparatus becomes inoperative.

The invention also has for an object to provide an apparatus of this kind adapted to be placed in public places, such as hotel lobbies and the like, and which provides means whereby a message or the like may be readily recorded upon a disc or kindred recording member, for the purpose of having the message transmitted through the mails or otherwise transported and then reproduced by any one of the types of sound reproducing machines.

In the accompanying drawings:—

Figure 1 is a view perspective illustrating an apparatus constructed in accordance with an embodiment of my invention as it appears for service;

Figure 2 is a diagrammatic view illustrating the circuits whereby the various parts of the apparatus are caused to operate in proper sequence;

Figure 3 is an enlarged fragmentary vertical sectional view taken through the apparatus as illustrated in Figure 1 showing in detail certain features of construction as herein disclosed, with the operating circuits diagrammatically indicated and with the various parts in their inoperative positions;

Figure 4 is a view similar to Figure 3 with certain of the parts in the working position;

Figure 5 is a sectional view taken substantially on the line 5—5 of Figure 3;

Figure 6 is a fragmentary view partly in section and partly in top plan illustrating the means herein disclosed for moving the sound recording mechanism proper away from the table and disc thereon;

Figure 7 is a fragmentary view in top plan of the stop member for properly positioning a disc upon the table after being released from the magazine.

Figure 7ª is an end elevation of the stop for the record blank.

Figure 8 is a side elevational view of a clutch mechanism used in the apparatus.

As disclosed in the accompanying drawings, C denotes a cabinet in which my recording apparatus is housed.

Above its lower end, the cabinet C is intersected by a horizontally disposed floor 1 upon which is mounted adjacent to the rear wall 2 of the cabinet an upstanding bracket 3 providing a mounting for the lower end portion of a tubular shaft 4. This shaft 4 is upwardly and forwardly inclined and

the upper portion of the shaft 4 is disposed through and rotatably supported by a cross member 6 interposed between the side walls of the cabinet. The lower end portion of the shaft 4 has fixed thereto a gear 7 meshing with a gear 8 rotating with the larger gear 9 supported by the upstanding brackets 10 carried by the floor or partition 1. This gear 9 meshes with the pinion 11 constituting a hub for a larger gear 12 also rotatably supported by the brackets 10 and this gear 12 is in mesh with the pinion 14 carried by an end portion of the drive shaft 15 comprised in the motor M of an electrical type. When the motor M is energized, the shaft 4 will be caused to rotate at a predetermined speed.

The upper end portion of the shaft 4 is suitably affixed, as at 16, to the axial center of the turn table 17, said table being provided with a central opening 18 in continuation of the bore of the shaft 4. This table 17 is snugly received within an opening 19 provided in a runway R. This runway extends from the inner or discharge end portion of a magazine A to a delivery slot or opening 20 provided in the front wall 5 of the cabinet C at a point below the table 17. The runway or chute R is continued outwardly beyond the front wall 5 of the cabinet C by an apron 21 terminating in an upstanding flange 22. This flange 22 provides a stop for an ejected record blank.

The magazine A comprises a horizontally disposed semi-cylindrical trough suitably supported within the upper portion of the cabinet C and preferably adjacent to the front wall 5 by the arms 23 or otherwise. This magazine A is adapted to carry a plurality of discs D or blanks and which are adapted to be intermittently fed toward the upper or receiving end portion of the runway R.

As is particularly illustrated in Figures 3 and 4, the upper portion of the runway R is spaced from the adjacent end of the magazine A a distance substantially equal to the thickness of a disc D whereby the forward movement of the disc pack or cartridge is limited to permit only a single disc to be received at a time within the runway R for initial delivery upon the table 17.

The disks or blanks are shifted longitudinally along the trough A by means of a follower 24 which is approximately circular in form and has an arm 25 which is supported by a slide 26 which is grooved or channeled to receive guide rails 28 mounted within the cabinet C. Thus the follower 24 is supported for movement toward or from the discharge end of the mazagine A.

The arm 25 above the follower 24 but below the block 26 has secured thereto an end portion of a flexible member 29 which extends inwardly above the magazine A and over a guide pulley 30 positioned above the receiving end of the runway R. The member 29 extends downwardly from this pulley 30 and is wrapped around a pulley 31 suitably supported for rotation. The member 29 extends downwardly from this pulley 31 and to its free or lower extremity has secured thereto and suspended thereby a weighted member 32. This weighted member 32 operates to automatically effect the desired movement of the follower 24 toward the discharge end of the magazine A to effect the desired discharge from the magazine of a disc D. This movement of the follower 24 is effected intermittently and, as herein disclosed, the desired operation is accomplished by having fixed to an end portion of the pulley 31 a ratchet wheel 33 which is positioned between the arms 34 of an anchor escapement 35. This escapement 35 is supported for swinging movement, as at 36, and is provided at its pivoted portion with the extended arm 37 which is adapted to be swung at predetermined intervals to effect the requisite oscillation of the anchor escapement 35 whereby the desired intermittent movement of the follower 24 is permitted under the influence of the weighted member 32. It is believed to be obvious that the pulley 31 is normally held against rotation by contact of one of the arms 34 with the ratchet 33 but which is normally urged toward such ratchet by the weight of the arm 37. However, to further assure intermittent movement of the arm 37 the expansible spring 38 is provided contacting with the arm 37 from above and the extent of movement of the arm 37 in such direction is limited by contact with the adjustable stop 39. This stop 39, as herein disclosed, comprises a shank threaded through a foot 40 carried by an end portion of a rod 41 extending downwardly from a supporting bracket 42. The expansible member 38 hereinbefore refered to is interposed between the arm 37 and the support 42.

Movement of the arm 37 in the opposite direction is accomplished, as herein disclosed, by the electro-magnet 43 depending from the bracket 42 and which is interposed in an operating circuit comprising the conductors *a* and *b* in connection with a suitable source E of electrical energy. In communication with the chute 46 above the contact members 44 and 45 is a coin slot 47 provided in the front wall 5 of the cabinet C. The contact member 45 is supported for swinging movement in a direction toward and from the contact member 44 and is normally held in close proximity to the contact member 44 by the normally extened core 48 associated with the solenoid 49.

As particularly illustrated in Figure 2, the contact members 44 and 45 extend downwardly and convergently but are at all times in spaced relation but when a coin or other metallic check 50 is dropped within the chute 46, and is received between the members 44 and 45 it will close the circuit through the con-

ductors *a* and *b* resulting in the energizing of the magnet 43 with the resultant delivery of a disc D upon the runway R.

Also interposed between the conductors *a* and *b* is an electro-magnet 51 depending from a cross strip 52 suitably supported within the cabinet C at a point below the lower portion of the table 17. The magnet 51 is simultaneously energized with the magnet 43 and when energized the magnet 51 imposes upward movement to the rod 53 slidably disposed through the cross strip 52 and a further cross strip 54 suitably supported below the strip 52. The portion of the rod 53 above the cross strip 52 is enlarged to provide a head 53′, said head 53′ having contact with the cross strip or member 52 from above to limit the downward movement of the rod 53. Extending upwardly from the head 53′ are the normally separated spring contacts 55 which, when the head 53′ is in its lowermost position, are below the upper surface of the table 17 in order to offer no hindrance or obstruction to the passage of a disc D from the table 17 for delivery or discharge through the opening 20.

These contacts 55 are carried upon an arcuate stop or record blank rest 56 and project beyond the middle of this rest or stop 56. The ends of this rest are provided with outstanding lugs 99 and, as shown in Figure 5, the floor of the runway, which is cut out to receive the turntable 17, is also cut out to permit the outward movement or retraction of these lugs 99 and of the pair of contacts 55, these contacts being disposed at the middle of the arcuate support 56. When the rod 53 is in its projected position, these contacts 55 are projected beyond the face of the turntable 17, as are the lugs 99, so that as the disk or record blank D travels downwardly along the runway R, the disk will be stopped when superimposed upon and concentric with the turntable.

As a disc D comes in contact with the uppermost contact member 55 it will force the contact members against each other closing a circuit through the shunt line *c* interposed between the conductors *a* and *b*. Interposed in this line *c* is an electro-magnet 57 supported by the upper portion of the bracket 3. When energized, the electro-magnet 57 imparts upward movement to a rod 58 disposed through the tubular shaft 4 and when in its full raised position, the upper end portion of the rod 58 is extended through the conventional central opening in the disc D arranged upon the table 17 and thereby assures the requisite maintenance of said disc upon the table 17 as said table rotates.

To this end, the electro-magnet 57 coacts directly with a laterally disposed and upwardly directed elongated foot 59 carried by the lower portion of the rod 58 and which rod is normally maintained in its lowered position by a retractile spring 60 interposed between the lower end of the rod 58 and an outstanding arm 61 carried by the bracket 3. It is also to be understood that the rod 53 hereinbefore referred to is returned to its lowermost position by the spring 62 interposed between an outstanding arm 63 carried by the rod 53 and the arm 64 extending outwardly from the cross member or strip 54.

The foot 59 of the rod 58 is provided with an upstanding finger 65 which, as the rod 58 moves upwardly, closes the switch 66 interposed in the circuit *d* for the motor M, said circuit *d* being in multiple with the circuit afforded by the conductors *a* and *b*.

Before the finger 65 closes the switch 66, a second finger 67 carried by the foot 59 momentarily closes a switch 68 interposed in the circuit *e* also in multiple with the circuit comprising the conductors *a* and *c*. Also interposed in the circuit *e* is an electro-magnet 69 which, when energized, releases a latch 70 from the upper portion of a horizontally swinging frame F permitting the stylus of the sound box 71 to come into proper engagement with the peripheral portion of the disc D upon the table 17.

The frame F has its lower portion pivotally connected, as at 72, with the partition or floor 1 and the sound box 71 is operatively engaged with the threaded portion 73 of the shaft 74. This shaft 74 is rotatably supported by the side members 75 comprised in the frame F and one end portion of the shaft 74 is in driven connection by the gear train 76 carried by one of the side members 75 with a drive gear 77 carried by the shaft 78. This shaft 78 is rotatably supported by the lower portion of said side member 75 and the supplemental frame member 79. This member 79 is in parallelism with the side member 75 just referred to and provides additional support for the gear train 76 and the adjacent end portion of the shaft 74. The gear 77 is constantly in mesh with the gear 80 keyed to the adjacent end portion of the shaft 15 for rotation therewith but having movement lengthwise thereof. A face of the gear 80 is provided with a clutch member 81 which interlocks with the clutch member 82 fixed to the shaft 15 when the frame F swings downwardly toward the table 17 whereby the shaft 74 is caused to rotate in a direction to move the sound box 71 inwardly or toward the center of the table 17 or more particularly the disc D superimposed thereon. When the frame F which carries the gear 77 is swung outwardly, the clutch member 81 will disengage itself from the clutch member 82 under the influence of the spring 83 carried by the hub portion of the gear 80 and having contact at the axial center of the adjacent free end of the shaft 15. As shown clearly in Figure 8, the spring 83 is mounted at its inner end upon the hub of the gear 80 and

this spring, therefore, acts to retract the gear 80 and the clutch member 81 in a direction away from the clutch member 82. When the frame F is swung outward, the gear wheel 77 will be retracted in a direction away from the motor M and the spring 83 will cause the gear wheel 80 to follow the gear wheel 77 in its outward movement until the clutch teeth on the member 81 disengage from the clutch teeth 82, thus disconnecting the wheel 77 from the motor.

Extending outwardly from the front wall 5 of the cabinet C is the mouth piece 84 which is in requisite communication with the sound box 71 through the medium of the interposed flexible tube 85.

As the stylus of the sound box 71 moves over the applied disc D, a wedge member 86 enters between the side member 75 of the frame F remote from the gear train 76 and a fixed member 87 herein disclosed as suitably positioned within the cabinet C. This results in an upward or lifting movement being imparted to the frame F, bringing the stylus of the sound box 71 free of contact with the disc D on the table 17 and causing the latch 70 to engage the upper portion of said frame to again hold the same in inoperative position. As the frame F is raised or swung upwardly it tightens the endless cord or belt 88 disposed around the pulley 90 fixed to the shaft 74 and also around a pulley 91 arranged to one side of and at the axial center of a larger pulley 92. This pulley 92 is rotatably supported by a swinging bracket 93 and is in driven connection through the medium of the endless cord or belt 94 with the pulley 95 fixed to the end portion of the shaft 15 remote from the gear 80. The connection afforded by the cord or belt 94 is such that when the cord or belt 88 is taut, the shaft 74 will be reversely directed to return the sound box 71 to its outermost or normal position.

The wedge member 86 is carried by the outer or free end portion of an elongated arm 86′ carried by the sound box 71 and disposed in the same general direction as the arm 86′ is a second elongated arm 96. This arm 96 at its outer or free end portion is provided with a depending finger 97 which operates to momentarily close a switch 98 about the time the sound box 71 is returned to its outermost or normal position.

The closing of the switch 98 results in the energizing of the solenoid 49 retracting the core 48 and thus permitting the coin or check 50 between the contact members 44 and 45 to free therefrom and thereby rendering the machine entirely inoperative until a further coin or check is deposited in the chute. The switch 98 is interposed in the circuit for the solenoid 49, said circuit being also in multiple with the circuit afforded by the conductors *a* and *b*.

When the circuit is broken by release of the coin or check 50, the rod 58 is retracted as is also the arm 53, thus releasing the disc B superimposed upon the table 17 and permitting the same to travel downwardly along the lower portion of the runway R and be discharged or ejected upon the apron 21 through the opening 20 in the front wall 5 of the cabinet C.

To further facilitate the functioning of the stop member 56, the extremities thereof are provided with the upstanding lugs 99. (See Figure 7.)

A suitable pointer or indicator 100 is carried by the sound box 71 and is extended for visual access through the slot 101 in the front wall 5 of the cabinet C so that the person using the apparatus may readily determine when the recording operation will be completed.

In order to facilitate the proper placement of a disc upon the table 17, I dispose transversely across the runway R immediately above the opening 19 a guide bar or strip 102 the under surface of which is preferably round in cross section upwardly from below, said bar 102 being spaced from the body portion of the runway R a distance slightly in excess of the thickness of a disc D. It will be seen that with this construction a single initial actuation consisting of the deposit of a coin in the coin slot 47 will cause the automatic delivery of a record blank to the chute or runway R, will cause the stoppage of this blank upon the turntable 17 and cause the projection of the rod 58 into engagement with the blank to center the same, that simultaneously the motor will be energized, the latch 70 holding the recording sound box off of the record blank will be released so as to bring the recording apparatus into engagement with the record blank, and simultaneously the recording apparatus will be caused to travel transversely across the blank toward the center thereof. When it reaches the center, the recording sound box will be automatically lifted from the blank and returned to its initial position and this will cause the breaking of a circuit to the motor and all the parts will be in their initial positions ready to record upon a new record blank. The operation of the device from the time that a coin is deposited in the coin slot until the time when the record blank has been delivered with the record thereon is entirely automatic.

From the foregoing description it is thought to be obvious that a sound recording apparatus constructed in accordance with my invention is particularly well adapted for use by reason of the convenience and facility with which it may be assembled and operated, and it will also be obvious that my invention is susceptible of some change and modification without departing from the principles and spirit thereof and for this

reason I do not wish to be understood as limiting myself to the precise arrangement and formation of the several parts herein shown in carrying out my invention in practice except as hereinafter claimed.

I claim:—

1. In a sound recording mechanism, a sound box, means for supporting a record member in position for operative engagement by the sound box, a magazine for containing a plurality of records, means for delivering the records one at a time to the supporting means, said delivery means including a follower, a flexible member having connection with the follower, a pulley around which the flexible member is wound, a weight suspended from the lower end of the flexible member, and means whereby to impart an intermittent movement to the pulley for ejecting the records from the magazine one at a time.

2. In a sound recording mechanism, a sound box, means for supporting a record in position for operative engagement by the sound box, a magazine for containing a plurality of records, means for delivering the records one at a time from the magazine to the record supporting means, said delivery means including a follower engaged with the innermost record in the magazine, a block attached to the follower having grooves, guide rails in said grooves, a flexible member connected to the follower and extended beyond one end of the magazine, a pulley around which the flexible member is passed, a weight suspended at the outer end of said flexible member, a ratchet on the pulley, a pivoted arm, spaced pawls at one end of said arm for alternate engagement with the ratchet, and means adapted for engagement with the other end of the arm to impart an intermittent movement thereto, causing alternate engagement of the pawls with the ratchet teeth whereby to move said follower in the magazine and eject the records therefrom one at a time.

3. In a sound recording mechanism, a rotatable table to receive a record and disposed in an inclined plane, an inclined apron having its upper edge registering with the lower edge of the table, means for supplying a record to said table, means for rotating said table, a sound box, a pivoted frame upon which the sound box is mounted, means for moving said sound box into position for engaging the record at the outer edge thereof, means for moving said sound box across the record, means for moving the sound box out of engagement with the record when the sound box reaches a point adjacent the center of said record, means for supporting the record upon the table during operative contact of the sound box, and means whereby to release said supporting means at the completion of the reproduction of the recording of the record whereby to release said record from the table as and for the purpose specified.

4. In a sound recording instrument, a rotatable table member disposed in an inclined plane, an inclined apron having its upper edge registering with the lower edge of the table, a horizontally disposed magazine supported above the table, a runway leading from one end of the magazine to the table, means for ejecting records from the magazine one at a time to discharge them through the runway onto the table, means forming a stop to correctly position the records upon the table, a sound box positioned above the table, means for moving the sound box into engagement with the record, means for rotating said table, means operatively connected with the means for rotating the table for moving the sound box across the record during rotation of the table, means for moving said sound box away from the record at a predetermined time, and means for releasing the stop means for the record to permit discharge of the same from the table.

5. In a sound recording instrument, a table to receive a record, said table being disposed in an inclined plane, means above the table for supplying records thereto, said means being intermittently operated to supply the records one at a time, stop means at the lower side of the table to correctly position the records thereon, a sound box, means for moving the sound box into engagement with the record following the positioning of a record on the table, means for moving the sound box away from the record upon completion of the recording of the record and means for retracting the stop means to permit the record to gravitate from the table.

6. In a sound recording instrument, a table disposed in an inclined plane for receiving a record thereon, a magazine above the table for supporting a plurality of records, a runway leading from one end of the magazine to the table, means for ejecting the records from the magazine to the runway one at a time to be directed onto the table, stop means at the lower side of the table for engagement by each record, to correctly position the same upon the table, a pivoted frame adjacent the table, a shaft rotatably mounted in the frame and having a threaded portion, a sound box mounted upon the shaft and having engagement with the threaded portion, means for simultaneously rotating the table and said shaft, means for moving the sound box into operative position with respect to the record, means for moving the sound box away from the record upon completion of the recording operation, and means for releasing said stop means to permit the record to gravitate from its position upon the table upon completion of the recording operation.

7. A sound recording and record delivering mechanism including an inclined runway,

a turntable disposed in an inclined plane and constituting a portion of the bottom of the runway, a shiftable stop disposed below the turntable, a sound recorder disposed above the turntable, a motor for the turntable, manually controlled means for discharging a record blank in the runway, means actuated automatically by the arrival of the record blank upon the turntable to center the blank on the turntable for rotation therewith and energizing the motor, means shifting the recorder into operative engagement with the blank and feeding it across said blank, means acting to lift the recorder from the record blank when the recorder has finished recording, means then acting to release the blank and shift the stop out of its obstructing position to permit a finished blank to pass down the runway and be discharged, and means then acting to stop the motor.

8. In a recording phonograph, a turntable, a record receiving inclined runway, the turntable forming a portion of the bottom of the runway, means for stopping a record blank moving down the runway when it is in register with the turntable, means for rotating the turntable, recording mechanism associated with the turntable, means for lowering the recording mechanism into engagement with the blank on the turntable, means after the record has been made acting to raise the recording mechanism form the blank, release the blank to permit it to continue its passage down the runway and be discharged, and means for stopping the movement of the turntable.

9. In a phonographic recorder, a record rotating table, a runway in the bottom of which the turntable is set, the runway and table being inclined, and means for discharging a record blank onto said runway and guiding it onto the table, holding the blank on the table until the record is completed, and then releasing the blank.

10. In a phonographic recording mechanism, an inclined record rotating table, means for discharging a record upon said table, means for holding the record upon the table, and means to shift the last named means out of operative position to permit the record to slide from the table.

11. In a phonographic recording mechanism, a turntable disposed at an inclination, an inclined runway in which the turntable is set, manually actuatable means for discharging record blanks one by one upon the upper end of said runway whereby they are carried onto the turntable, means disposed in the path of movement of the blank when it reaches the turntable and supporting the blank in concentric relation to the turntable, means to rotate the turntable, and means controlled by the blank for starting the rotation of said turntable, and means operating automatically after a predetermined time to stop the rotation of the turntable and release the blank.

12. In a phonographic recording mechanism, an outer casing, a turntable disposed within the casing, recording mechanism adapted to engage with a record blank thereon, manually controlled means for discharging a record blank onto the turntable, means controlled by the arrival of a record blank upon the turntable acting to rotate the turntable, means acting simultaneously to bring the recording mechanism into engagement with the record blank, means for feeding the recording mechanism across the blank, means acting when the recording mechanism has moved to the center of the blank to lift the recording mechanism from the blank and return it to its initial position, means controlled by the return of the recording mechanism to its intial position acting to stop the rotation of the turntable and discharge the blank from the turntable and a discharge chute upon which the blank is received from the turntable and by which it is conducted to the exterior of the casing.

13. In a phonographic recording machine, a turntable disposed on an inclined plane, a magazine, manually operable means for discharging a recording blank from the magazine onto said turntable and holding it thereon, and means operating after a predetermined time to withdraw said record holding means to permit the record to discharge by gravity from the turntable.

14. In a phonographic recording machine, a record receiving runway disposed on an inclined plane, an inclined turntable forming part of the bottom of the runway, means for discharging a record blank by gravity down said runway and onto the table, means for supporting the record blank upon the table while the table is turning, means actuated by the arrival of a record blank upon the table acting to rotate the turntable, a recording mechanism associated with the turntable, means acting to shift the recording mechanism into operative engagement with the record on the turntable when the turntable is rotated, and means acting after a predetermined time to lift the recording mechanism from the record, stop the rotation of said turntable, and release the record to permit it to descend the runway by gravity and be discharged.

15. In a phonographic sound recording mechanism, a runway adapted to receive record blanks, a magazine comprising a supporting member upon which a plurality of records may be arranged and rest upon their edges, a follower engaging said records, and manually controlled means for moving said follower step by step to intermittently discharge a record upon the runway.

16. In a phonographic sound recording mechanism, a runway adapted to receive rec-

ord blanks, a magazine comprising a supporting member upon which a plurality of records may be arranged and rest upon their edges, a follower engaging said records, a flexible member attached to said follower, a drum over which the flexible member passes and having ratchet teeth, an anchor escapement coacting with the ratchet teeth, and manually controlled means for intermittently actuating the anchor escapement to permit the drum to rotate through one step to thus force one record from the magazine into the runway.

In testimony whereof I hereunto affix my signature.

JOSEPH D. FEHER.