Feb. 18, 1958 R. F. PATTERSON 2,823,881

IMPROVED AERODYNAMIC DROGUE

Filed Dec. 15, 1955 8 Sheets-Sheet 1

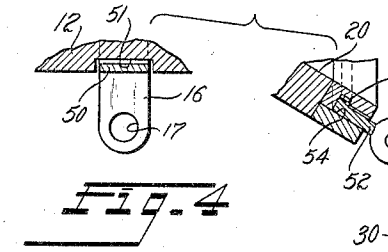

Fig. 4

Fig. 1

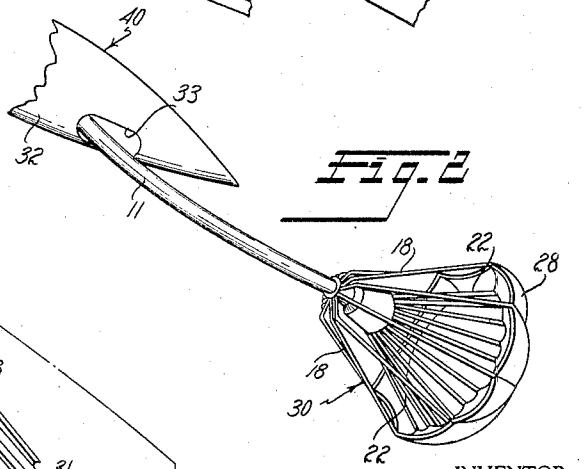

Fig. 2

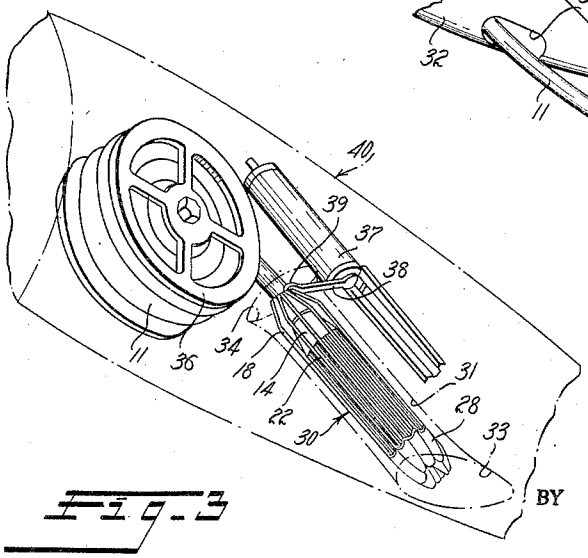

Fig. 3

INVENTOR
RICHARD F. PATTERSON

BY Strauch, Nolan & Diggins

ATTORNEYS

Feb. 18, 1958 R. F. PATTERSON 2,823,881

IMPROVED AERODYNAMIC DROGUE

Filed Dec. 15, 1955 8 Sheets-Sheet 2

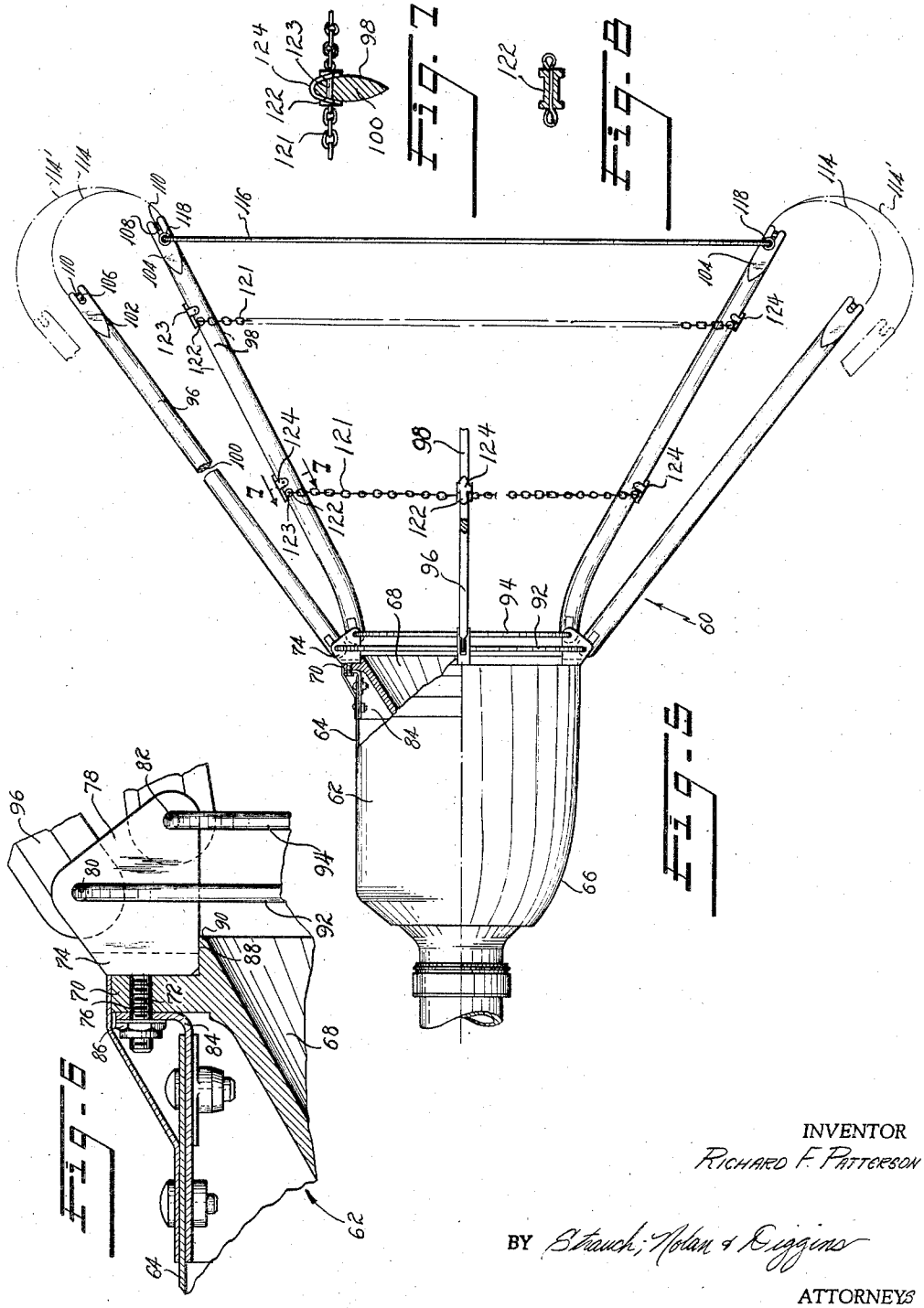

INVENTOR
RICHARD F. PATTERSON

BY Strauch, Nolan & Diggins

ATTORNEYS

Feb. 18, 1958 R. F. PATTERSON 2,823,881

IMPROVED AERODYNAMIC DROGUE

Filed Dec. 15, 1955 8 Sheets-Sheet 3

Fig. 9

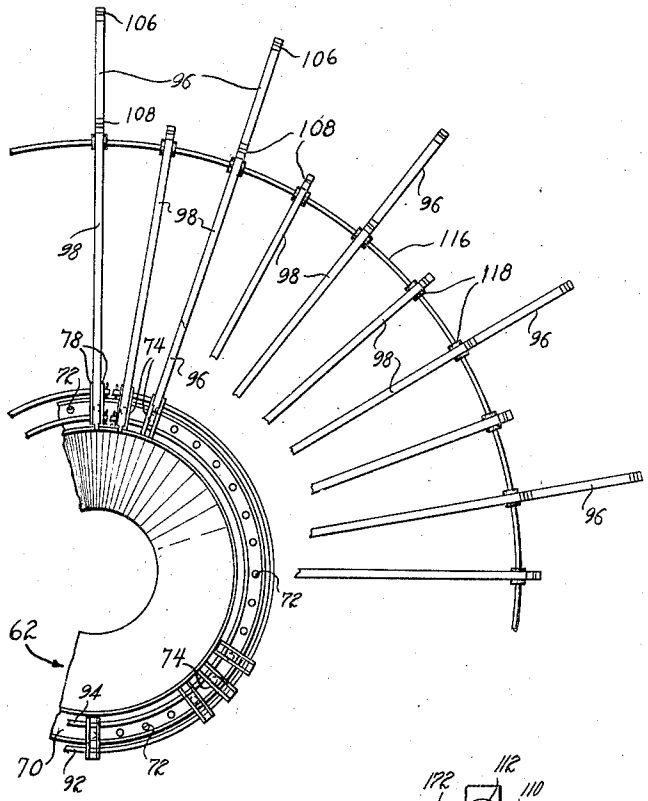

Fig. 10

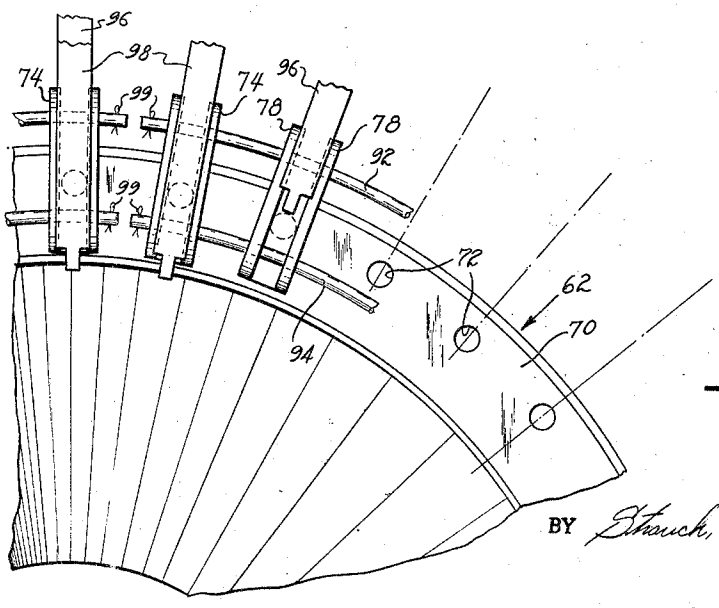

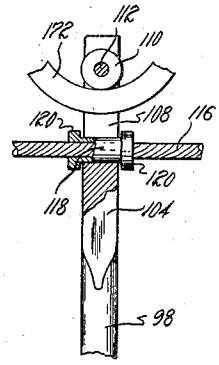

Fig. 11

INVENTOR
RICHARD F. PATTERSON

BY Strauch, Nolan & Huggins

ATTORNEYS

Feb. 18, 1958 R. F. PATTERSON 2,823,881

IMPROVED AERODYNAMIC DROGUE

Filed Dec. 15, 1955 8 Sheets-Sheet 4

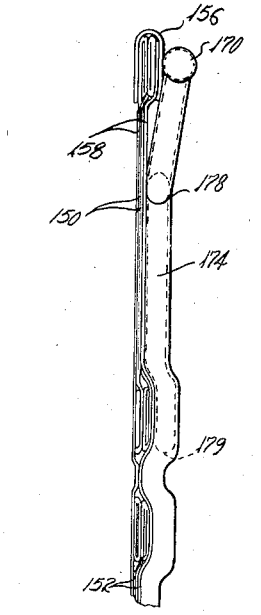

Fig - 13

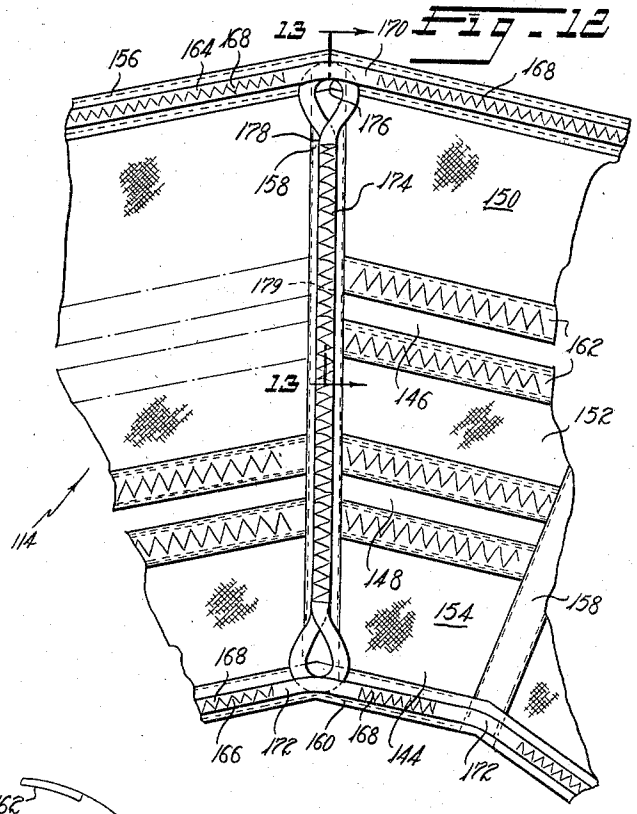

Fig - 12

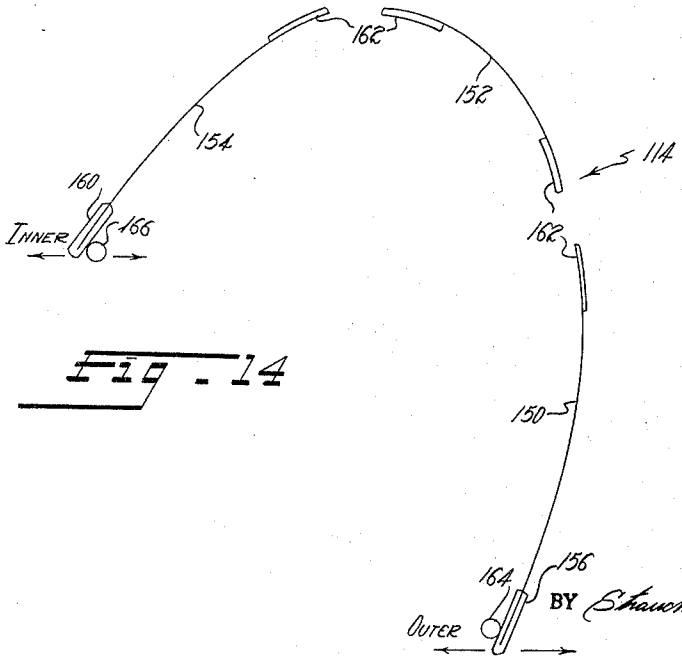

Fig - 14

INVENTOR
RICHARD F. PATTERSON

BY Strauch, Nolan & Diggins

ATTORNEYS

Feb. 18, 1958 R. F. PATTERSON 2,823,881

IMPROVED AERODYNAMIC DROGUE

Filed Dec. 15, 1955 8 Sheets-Sheet 5

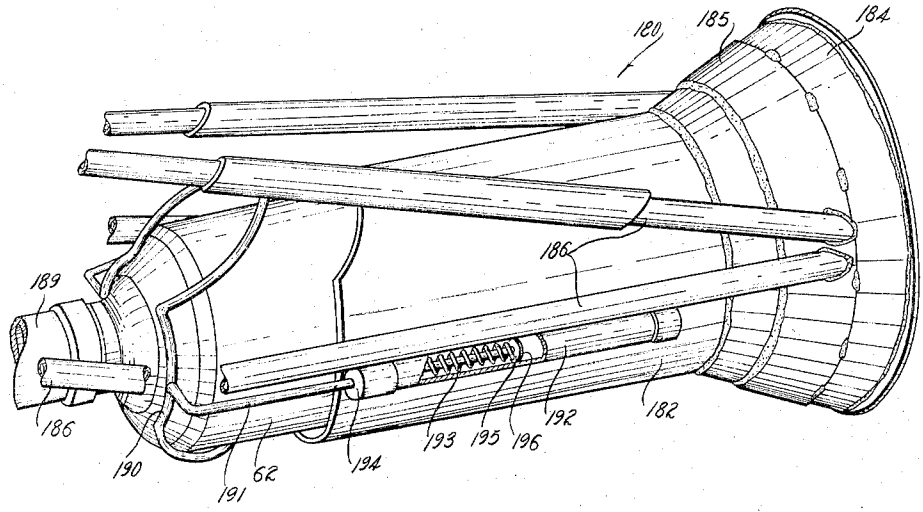

Fig. 15

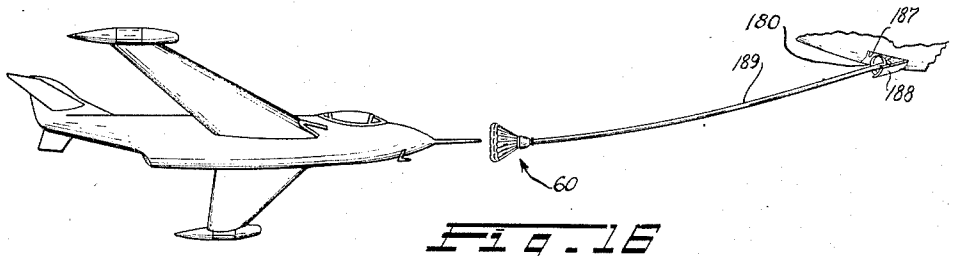

Fig. 16

INVENTOR
RICHARD F. PATTERSON

BY Strauch, Nolan & Higgins

ATTORNEYS

Feb. 18, 1958 R. F. PATTERSON 2,823,881

IMPROVED AERODYNAMIC DROGUE

Filed Dec. 15, 1955 8 Sheets-Sheet 6

Fig. 18

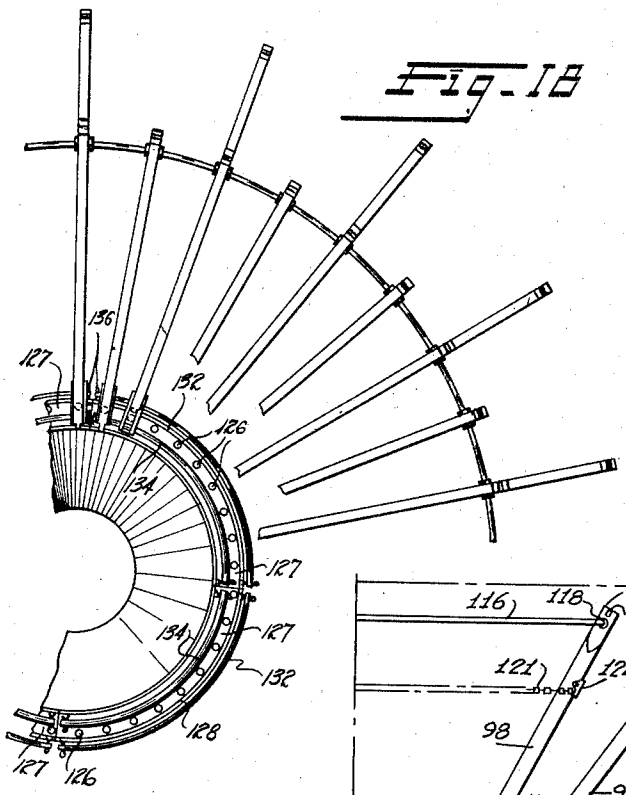

Fig. 17

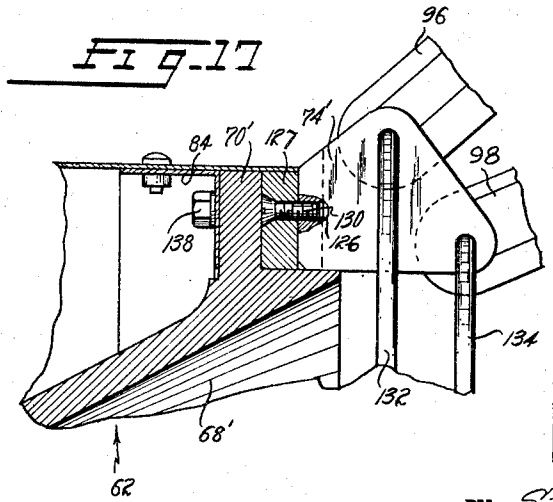

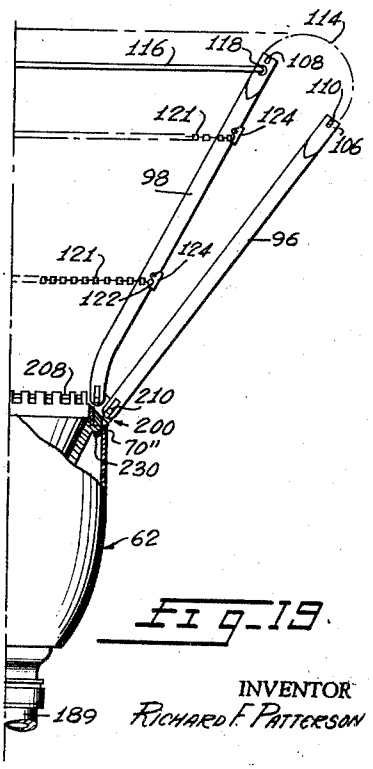

Fig. 19.

INVENTOR
RICHARD F. PATTERSON

BY Strauch, Nolan & Diggins

ATTORNEYS

Feb. 18, 1958 R. F. PATTERSON 2,823,881

IMPROVED AERODYNAMIC DROGUE

Filed Dec. 15, 1955 8 Sheets-Sheet 7

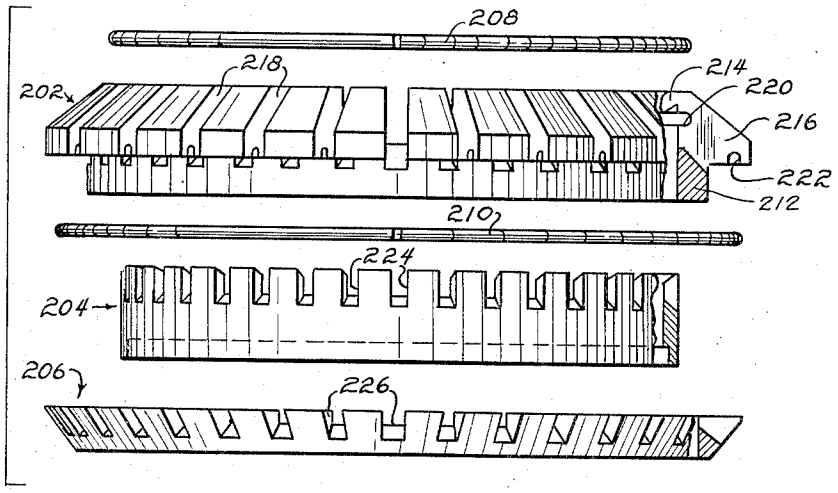

Fig. 22

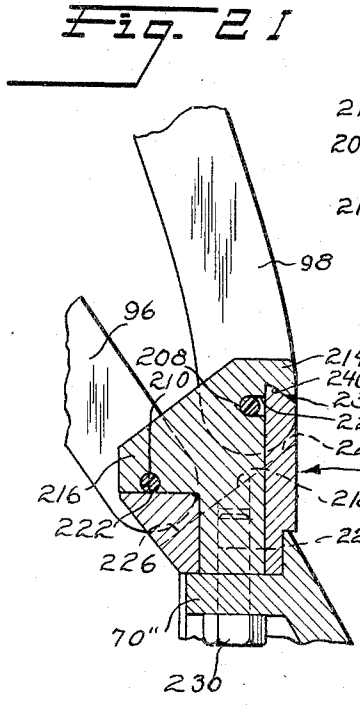

Fig. 21

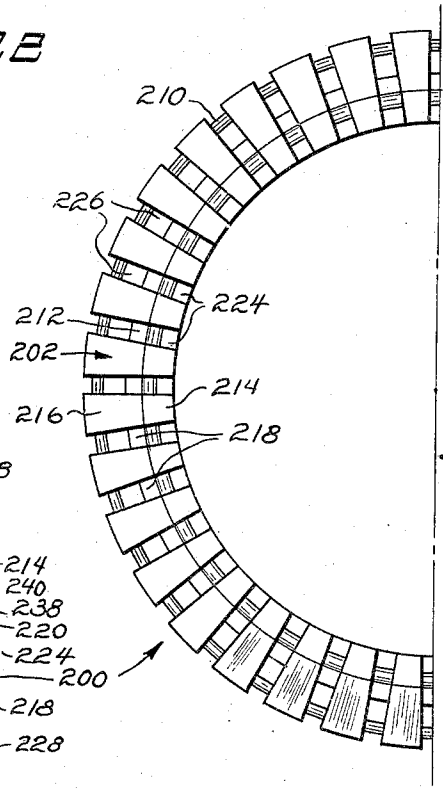

Fig. 20

INVENTOR
RICHARD F. PATTERSON

BY Strauch, Nolan & Diggins

ATTORNEYS

Feb. 18, 1958 R. F. PATTERSON 2,823,881

IMPROVED AERODYNAMIC DROGUE

Filed Dec. 15, 1955

8 Sheets-Sheet 8

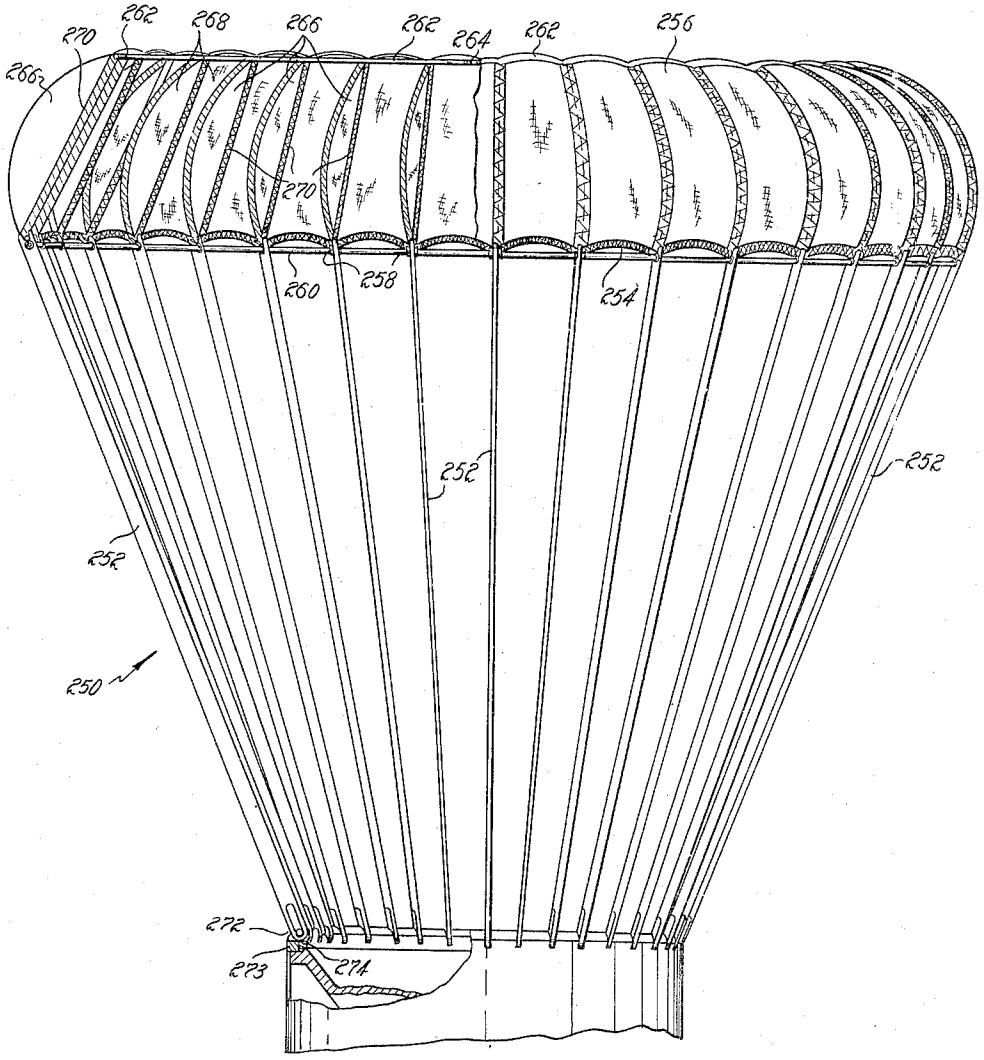

Fig. 23.

INVENTOR
RICHARD F. PATTERSON

BY Staauch, Nolan & Neale

ATTORNEYS

United States Patent Office 2,823,881 Patented Feb. 18, 1958

2,823,881

IMPROVED AERODYNAMIC DROGUE

Richard F. Patterson, Van Nuys, Calif.

Application December 15, 1955, Serial No. 553,276

43 Claims. (Cl. 244—135)

This invention relates to an aerodynamic drogue construction and is a continuation-in-part of United States application for Letters Patent Serial Number 531,312 filed August 30, 1955, now abandoned which is a continuation-in-part of United States application for Letters Patent Serial Number 457,854 filed September 23, 1954 now abandoned.

In particular this invention consists of a ring shaped drag inducing body exemplified specifically as a parachute type drogue, disclosed as part of in-flight refueling apparatus for aircraft to illustrate the preferred embodiment of the invention. The use of a drogue for in-flight refueling has developed primarily from the need of a drag device on a refueling coupling fastened on the end of a refueling hose trailed from a tanker, mother or buddy aircraft to maintain the hose in a horizontal attitude. Such attitude will best enable a following aircraft equipped with a refueling apparatus known as a probe, to contact and connect with the refueling coupling, accomplish refueling and thereafter break away.

The drogue and probe hose system has an inherent flexibility and simplicity that substantially overcomes disadvantages of a rigid flying boom system, enabling the mother aircraft and following aircraft to have a greater freedom of movement relative to each other. A hose trailing from an aircraft will at times have a tendency to whip, therefore a stabilizing device is necessary. The trailing coupling must resist forward movement of the probe, hence a drag device must be incorporated at the hose end. To facilitate reception and coupling of the following aircraft, a target with means to guide the probe of the following aircraft into the coupling must be provided at the hose end. Such previously used devices providing stability, drag, target and probe guide have invariably been solid configurations such as funnel or cone shaped members fastened to a coupling on the end of a hose.

A cone shaped drogue serves its purpose at low speeds but, due to aerodynamic factors, becomes highly unstable and is considered unsatisfactory at anything above moderate speeds. It is believed that the following factors create such instability. The relatively massive coupling creates a drag that has a center of pressure substantially midway of the coupling length. A cone drogue placed on the coupling creates additional drag with a center of pressure approximately one-third of the distance from the leading edge of the cone to its trailing edge. The resultant center of pressure (referred to hereinafter as C. P.) of coupling and cone occurs approximately at the joinder between coupling and cone, well forward in the overall drogue configuration. Such a location provides an increasing unstable condition as airspeed increases and yawing tendencies in and yaw conditions effecting the drogue are magnified, resulting in an erratic, weaving and bobbing target that is practically impossible for a following plane to contact.

A further factor that renders the cone drogue unsuitable at higher speeds is its wake pattern. As the "free"

air stream approaches the cone and starts to diverge, the air becomes accelerated. Thus the air stream flows from the trailing edge of the cone at a relatively high velocity. Within and immediately behind the cone is a low pressure area with negligible and possibly reverse flow air velocity. The high velocity air stream cylinder passing aft of the cone coacts with the inner void and, due to the Bernoulli effect, creates an extremely turbulent wake behind the cone.

These aerodynamic aspects of a cone drogue have two primary effects during attempts by a following aircraft to insert and couple a probe into the cone and coupling at the end of a trailing hose. The first effect may be termed "excitation" of the drogue, resulting primarily from instability of the drogue, due to the approaching probe. As the following aircraft with projecting probe approaches the drogue, a pressure front (mass of high-pressure air) existing just ahead of the aircraft passes into the turbulent drogue wake creating a relatively high pressure behind the drogue and increasing the turbulence of the air mass in the vicinity of the drogue. The cone drogue will float and dance just ahead of the probe, creating an impossible target. A second effect is "buffeting" and is that effect experienced by the following aircraft moving into the turbulent wake of the drogue.

An additional unsatisfactory aspect of a solid configuration drogue is its constant high drag coefficient that results in an increasingly flattened hose trail angle as higher speeds are experienced. As the hose trail angle flattens, the drogue follows more directly in the wake of the "mother" aircraft, hence the following aircraft must also fly in that wake to make a connection, a very undesirable position.

By this invention a drogue is proposed that is capable of satisfactory operation over a wide speed range including high speeds, that is satisfactorily stable, that is less susceptible to "excitation," and that will create a smoother wake to effectively decrease any tendency to "buffet" the following aircraft. The following factors are considered very important. The drogue must necessarily create sufficient drag on the coupling to maintain a trailing portion of the hose in substantially horizontal trail yet the overall hose trail angle should not approach a flattened angle. The drogue should be capable of decreasing its own drag area with increased airspeed to avoid placing too high a drag on the refueling hose and associated structure in the mother aircraft. Another desirable feature is ease in manipulation of the drogue during extension and retraction from the mother aircraft.

The following factors are realized by the basic configuration of the novel drag devices hereinafter disclosed as exemplary of this invention.

Stability is accomplished by positioning the drag producing body well aft of the reception coupling and supported from the coupling body by narrow, spaced arms that have little drag effect on the whole structure. The drawings illustrate the drag device in its preferred embodiment as a collapsible ring shaped parachute having skirt and vent perimeters fastened to a plurality of slightly flexible elongate support arms extending from the reception coupling. For purposes of this disclosure the drag C. P. of the parachute canopy can be assumed as a point centrally located in the canopy ring and midway of the depth of the canopy. The canopy drag C. P. location is thus approximately at the trailing edge of the drogue structure. By streamlining the coupling housing, its drag C. P. location shifts aft and the drag will be decreased, hence the major drag of the combined drogue and coupling will be furnishel by the parachute canopy, and resultant combined drogue and coupling C. P. location exists substantially within the annular zone defined by

the parachute. With drag force and its C. P. location well aft, an extremely stable drogue is obtained.

Use of a ring shaped canopy carried by a plurality of divergent support arms provides an excellent target at which the following aircraft may aim. The divergent support arms guide the probe to connecting engagement with the reception coupling and also permit airflow at substantially "free" air velocity through the large center opening of the canopy. The central free air stream and the outer free air stream relative to the ring shaped canopy receives a relatively low acceleration from the drogue of this invention as compared with the acceleration imparted to the air stream flowing past solid drogues such as a cone, so the area behind the canopy ring area is much less turbulent than that existing behind a cone drogue. Because of the relatively continuous area of "free" air stream behind this ring shaped rearwardly offset drogue, the "excitation" effect will be substantially decreased and may be eliminated and "buffeting" of the following aircraft will be negligible or eliminated because of the relatively smooth wake occasioned by airflow through the center of the ring. Available flight test results indicate that excitation and buffeting are essentially absent.

By pivotally mounting the parachute canopy support arms on the reception coupling, the parachute canopy may assume its most advantageous dynamic drag shape at varying airspeeds, and may also be collapsed during retraction. A further advantage is realized in that canopies of different areas can be used on the same support arms to create different drag characteristics for refueling operations at different airspeeds. Regardless of whether the support arms are pivotally mounted or not, a ring shaped canopy, even of fixed configuration, supported in offset arrangement aft of the reception coupling by conically disposed arms will enable the primarily desired results of less excitation, more stability over a greater range of airspeed, less buffeting for the following aircraft and still provide the ring shaped target. The canopy can be made of any light weight material capable of withstanding a high drag force. For example, it can be made from woven materials such as nylon, Duplon or metallic mesh of various porosities, or of metal or other known light weight materials, although it is preferable that the material and canopy be collapsible so the beneficial effects of pivoted riser arms can be realized.

The basic invention includes refinements to increase its effectiveness and to provide a more versatile drogue. A new general purpose parachute canopy has been devised that for present purposes may be aptly termed a ring-foil-slot type canopy which has three concentric ring panels and the preferred number of slots in the reception coupling drogue canopy is two. The specific canopy invention is the subject of a co-pending application Serial No. 632,880 filed January 7, 1957.

The same versatile drag results may be obtained in a novel manner by providing one annular set of pivoted arms attached to the outer perimeter of a modified ring shaped canopy. Such pivoted arms provide sole support for the canopy and also constitute a guide fence for a probe. The inner hem of the canopy includes a cable of fixed circumference which fixes the operative circumference of the inner perimeter, and fixed arcuate canopy spacers determine the maximum distance between inner and outer perimeters. This configuration, when employed under dynamic load conditions results in the canopy assuming its proper shape and might be thought of as a controlled "wind sock" type of aerodynamic drag device. Upon retraction, the pivoted arms fold back and collapse the canopy, the flexibility of the inner perimeter cable permitting the canopy to fold behind the arms.

The connections between the arms and the canopy provide a more rigid pivot support and also enable ease in removal and replacement of the canopy.

Accordingly, a primary object of this invention is to provide a novel drogue device having a stable drag configuration with decreased turbulent wake.

A further object resides in providing an annular drag member offset behind and attached to a support member by relatively rigid arms.

A still further object resides in providing a collapsible annular drag member offset behind and attached to a support member by pivoted relatively rigid arms.

A still further object resides in providing a refueling hose coupling with a drag device comprising an annular drag member positioned behind and fastened to the hose coupling, with relatively rigid arms that afford little drag and serve as a guiding structure to direct a probe, projected through the drag member, into the coupling.

Another object resides in providing a drag device with a parachute canopy of ring shape configuration fastened to relatively rigid support arms pivoted on a support structure to permit deviations in canopy configuration under varied airspeeds and to permit the drag device to be folded in a compact longitudinal package.

Still another object resides in providing a collapsible annular drag member offset behind and attached to a support member by a single annular row of pivoted relatively rigid arms functioning as the sole support for the drag member and also as a guide fence from the drag member to the support member.

Still another object resides in a novel manner of attaching the support arms of a parachute drag device to a support member.

A still further object of this invention resides in providing a quick, easy fastening structure that enables sectional removal and replacement of support arms and pivot supports of a pivoted arm, parachute type drag device for use on structural bodies, such as a reception coupling on an in-flight refueling hose.

A still further object resides in providing a lashing structure fixed on the flexible support arms of a parachute drag member to provide structural support and maintain the arms in a predetermined divergent manner during dynamic operating conditions.

Another object resides in the provision of an improved lashing cable cooperating individually with inner support arms of a parachute drag device to maintain proper spacing between each arm together with a proper divergence of the inner support arm during drag operations.

Still another object resides in the provision of a novel ring-foil-slot canopy arranged to be readily fastened to support arms on a drag device and having such aerodynamic properties as to maintain a stable open position under widely varying conditions of air stream velocity.

Further objects and advantages of the invention will be apparent from the following description and the appended claims taken in conjunction with the accompanying drawings. The preferred embodiments of the invention herein disclosed are illustrated in the following drawings in which:

Figure 1 is a side view in section, partially broken, illustrating one form of drogue construction of this invention and one manner of fastening the drogue to a reception coupling of an in-flight refueling hose;

Figure 2 is a perspective view illustrating the drogue of Figure 1 in a trailing operative condition;

Figure 3 is a perspective view, partially in phantom, illustrating one manner of storing the drogue in an aircraft;

Figure 4 is a partial cross sectional side view illustrating details of a modified structure for fastening the drogue to a reception coupling;

Figure 5 is a side view, partially broken away and sectioned, illustrating a modified drogue with a majority of the support arms removed for clarity and having a lashing cable cooperating with the inner or rear support

arms, and also illustrating how various size canopies can be alternatively used on the same support arms;

Figure 6 is an enlarged detail view illustrating one of the pivot fittings used in the construction of Figure 5;

Figure 7 is an enlarged detail section taken on line 7—7 of Figure 5 illustrating a retaining clip for an auxiliary lashing;

Figure 8 is a detail section of a bushing link used with a chain type lashing;

Figure 9 is a partially broken view from the right hand side of Figure 5 with the canopy removed and illustrating the inner and outer support arm arrangement;

Figure 10 is an enlarged detail view illustrating the pivot fittings and the pivotal connection of the support arms;

Figure 11 is an enlarged, partially broken view, illustrating details of the canopy end of one of the inner support arms and its cooperation with the lashing cable and canopy attaching loop;

Figure 12 is a lay-out view of a portion of a preferred ring-foil-slot canopy illustrating the manner of reinforcing, stitching and attachment of loops;

Figure 13 is a section view taken on line 13—13 of Figure 12 and illustrates the reinforced folds of the canopy panels;

Figure 14 is a diagrammatic view of the canopy showing the aerodynamic shape assumed in operation;

Figure 15 is a modified storage tube for the retracted and collapsed drogue;

Figure 16 illustrates a following aircraft preparing to insert its probe within a trailing drogue and reception coupling;

Figures 17 and 18 correspond to Figures 6 and 9 and illustrate a modified split ring structure for ease of fastening the support arms of the drogue to the reception coupling or support structure;

Figure 19 is a one-half side view of a drogue similar to that shown in Figure 5 with all but one set of inner and outer support arms omitted for clarity and utilizing a split ring form of support pivot assembly which is illustrated in Figures 20–22;

Figure 20 is an end view illustrating the support arm pivot assembly of Figure 19 with the support arms removed;

Figure 21 is a detail section view illustrating the assembled pivot ring of Figure 20 mounted on a coupling with canopy support arms attached;

Figure 22 is an exploded side view of the three rings components and two locking rings of the pivot ring assembly shown in Figures 20 and 21; and

Figure 23 is a side view partially broken away illustrating a further embodiment of the collapsible drag device of this invention using one annular set of pivoted arms with a slightly modified canopy.

Drogue structure

One form of operative structure incorporating the drogue of this invention is illustrated in Figure 1, showing a fuel hose **11**, trailing from an aircraft, and connected at the trailing end by means of a flexible coupling **12** to a reception coupling mechanism designated generally by the numeral **14**. Coupling mechanism **14** carries adjacent its forward end **15** a series of circumferentially spaced short lugs **16** provided with pivots **17** carrying a plurality of canopy support arms **18**, these arms being arranged during the operative condition of the drogue substantially in the locus of a cone, as shown. The probe connection coupling may be that of the Cobham et al. Patent No. 2,692,102 for example. The rearward end **19** of coupling **14** is provided with a recessed opening **20** adapted to receive and latch a probe (not shown) from an aircraft being refueled. A series of pivot lugs **21** are fastened to the coupling **14** surrounding the periphery of the opening **20** and pivotally carry a second group of canopy support arms **22** that also function as probe guide arms. Arms **22** have shoulders **23** adjacent their pivoted ends which are adapted to bear against coupling surfaces **24** in such a manner as to limit their outward rotation about the pivots **21** so they will be operatively located with respect to one another in the locus of a cone concentric with the locus of the cone formed by the forward group of support arms **18**.

Both the forward arms **18** and the rearward arms **22** are preferably formed of a strong stiff yet resilient material to provide slight flexibility during abruptly changing load conditions. Some suitable materials are metals with a good degree of flexibility and bonded, molded fibre-glass. In describing the parachute support arms, which are capable of withstanding tension and compression loads and provide slight flexibility under bending moments, the terms "rigid" or "relatively rigid" will be used in the specification and claims. It is to be understood that conventional parachute risers and/or shroud lines that cannot withstand compression and bending loads are not intended to be covered by the use of the terms "rigid" or "relatively rigid" arms or members. Further, both of these sets of arms are preferably of essentially rectangular or oval cross section so as to be subject to as little bending moment as possible during use, and have good aerodynamic qualities. The rearward combined support and guide arms **22** are formed as indicated to have one edge contiguous with the inner surface of the recessed opening **20**. The outer ends **25** and **26** of the support arms **18** and **22** are attached by fasteners **27** to a ring-shaped parachute canopy **28**. Cords or other specialized constructions of a type known to the art may be used instead of these fasteners. The fasteners **27** are preferably pivotally attached to the arms **18** and **22** so the ring-shaped canopy **28** may be conveniently packed for storage.

In various installations of the drogue it may be desirable to dispense with the shoulders **23** which bear against the surfaces **24** to limit the outward pivotal movement of the rear support and guide arms **22**, and to substitute in lieu thereof a cable, similar to cable **116** in Figure 5, which would join the ends **26** of arms **22**. If desired, a similar cable can be employed to join the ends **25** of the support arm **18**. It is also possible to form the edges of the canopy **28**, for example, the edge cords **168** in Figure 12, of sufficient tensile strength to serve as a means limiting outward rotation of arms **18** and **22**. By using such a cable or strong peripheral canopy edge, it is possible to positively limit the spacing between the outer ends **26** of the inner arms **22** and to eliminate the strain placed on coupling **14** by the limit shoulders **23**.

The ring-shaped canopy **28** is preferably, but not necessarily, made of a porous type of parachute material, for example, a fabric formed of nylon. Fabric used may be any suitable material, metal mesh fabrics being envisaged for use of this invention as a drag device behind jet aircraft without danger of burning the canopy. The canopy may be formed of various strips of fabric or fabric provided with various types of specialized holes or air openings as will be hereinafter fully described, in order to alter the performance characteristics of the drogue to a limited extent.

The primary function of the ring type canopy **28** is to provide a stabilized drag when the drogue is placed in operation. As the airstream fills the canopy, it expands to a ring shape, pulling the support arms **18** and **22** apart into the conical configurations illustrated in Figures 1 and 2. In the limited divergent position, the rear (inner) arms **22** provide structure that can receive and direct a probe, on an aircraft being refueled, into the opening **20** of reception coupling **14**. For this reason, the guiding support arms **22** are preferably spaced comparatively close to one another with the precise distance between adjacent arms **22** at any location within the locus of the cone formed by arms **22** being sufficiently smaller

than the diameter of the entering end of the probe, with which the drogue construction of the instant invention is designed to be used, that the probe will not pass between or wedge between two adjacent arms.

The forward or outer support arms 18 and the canopy 28 function to pull the rear support guide arms 22 apart to their limit position as indicated above, and for this reason may be termed as means for extending the support guide arms 22 during the operation of the drogue. Canopy 28, used as illustrated, also serves secondary purposes in the refueling system. Being of relatively large dimension, it can be treated with reflective material and easily illuminated at night by means of various lights to facilitate night refueling. It may also be treated with various luminescent or phosphorescent dyes for the same purpose. Being ring shaped, it is inherently an excellent target for the following aircraft.

The entire coupling and drogue can be readily stored out of the slipstream. When this is done, the canopy support arms 18 fold about the pivots 17 against the exterior of the coupling 14 and the probe guide support arms 22 lie within arms 18, folded toward one another. When the mechanism described is so collapsed, the canopy 28 collapses and folds up behind the support arms 18 or it may be manually folded and placed within the guide arms 22.

The entire mechanism can be collapsed by being pulled into a tubular structure positioned within an aircraft fuselage, wing or auxiliary container such as a pod carried below a wing. As this occurs, the canopy support arms 18 and 22 are automatically collapsed by contact with the faired opening 33 (Figure 3) of the tube. The canopy 28 is automatically collapsed when the arms are folded and is disposed back of the ends 25 and 26 of arms 18 and 22.

The preferable collapsible construction of the invention is particularly advantageous because of the ease with which it can be retracted, collapsed and stored. Using the collapsible drogue it is possible to replace presently used housings with closures that have to be mechanically opened and closed to the detriment of the aerodynamic characteristics of a "mother" aircraft, with a small cylindrical drogue tube fitting within such aircraft. Such a cylinder does not require a closure means, and occupies but a comparatively small volume.

The storing and automatic closing of the drogue is illustrated in Figure 3 of the drawings. A drogue 30, of the type seen in Figure 1 is illustrated in collapsed condition within a small cylinder 31 fixed in a fuselage 32 of an aircraft 40 so the open end 33 of the cylinder is coextensive with a relatively small opening in the bottom of the fuselage. The other end 34 of the cylinder 31 is also open so a hose 11 attached to the drogue 30 can be conveniently fastened to a hose reel 36 for extension and retraction. A drogue ejector 37 includes a projecting arm 38 with an end portion 39 which engages the forward end of the reception coupling when retracted into cylinder 31. The ejector may be spring loaded by engagement of coupling 14 upon retraction of the hose or it may be hydraulically actuated in the manner of a servo-motor, and can be used to start the drogue 30 moving out of the cylinder 31 through the open end 33 when extension of the drogue to trail condition is desired. When the ejector 37 projects the drogue 30 a short distance beyond the fuselage bottom 32, it will be acted on by the air stream moving past the aircraft, causing the parachute to open, and placing a drag on the refueling hose to thereby extend the hose to a horizontal trail position.

Figure 4 shows details of modified fittings for a drogue construction as shown in Figure 1. The short lugs 16, carrying the pivots 17, are secured to a ring 50 disposed for rotation within an annular recess 51 in the coupling 12. The pivots 21, instead of being attached directly to the coupling 14, are attached to a ring 52 having a projecting edge 53. The edge 53 of ring 52 is held in place within a recess 54 provided at the rear edge of the coupling 14 by a separable ring section fastened by means such as screws to the coupling body. Other details of the drogue construction used with the fittings shown in Figure 4 are identical with the details of the construction of Figure 1.

The advantage of the modified drogue fittings of Figure 4 over and above the advantages previously described is provided by the fact that with this modified construction the canopy 28 can rotate, in the event it is affected by various air currents tending to rotate it, without transmitting a torque load resulting from this rotation to the hose 11, and thereby setting up undesirable strains within this hose.

A second embodiment of the drag device that enables a very convenient manner of attachment to its support structure in addition to other structural modifications is illustrated in Figures 5–11. The drogue 60, for purposes of illustration but not limitation, is shown attached to an in-flight refueling reception coupling 62 substantially identical to that disclosed in Figure 8 of the aforementioned U. S. Patent No. 2,692,102 to Cobham et al. It is to be understood that the drogue can be fastened to any reception coupling or other body requiring an aerodynamic drag device and if necessary appropriate adaptors may be used.

It is preferable, but not necessary, to contour the outer casing 64 of the reception coupling 62, as shown by the lower half 66 of the coupling in Figure 5, to present a streamlined body to the airstream, decreasing drag and shifting the drag center of pressure of the reception coupling 62 aft for better stability. The rear end of the reception coupling 62 is provided with a funnel shaped reception opening 68 that can receive and guide a probe (not shown) into seating and coupled engagement inside the coupling in a conventional manner. The perimeter of the funnel-shaped opening 68 of the conventional coupling 62 is provided with an annular radial flange 70, normally used in conventional drogues as a mounting flange for a solid frusto-conical or funnel-shaped drag structure. As shown in Figures 9 and 10, a plurality of through holes 72 are drilled through the flange at cricumferentially spaced locations.

Forming a component part of the drogue construction of this embodiment, as distinguished from that illustrated in Figures 1–4, the support arm pivot lugs 74 (Figure 6) are independent, fork-shaped fittings with a threaded stud 76 projecting from their base. The side plates 78 of each fitting have two sets of coextensive holes 80 and 82 formed therein to provide means for two pivots as will become apparent. A plurality of lug fittings 74, equal in number to the circumferentially spaced holes 72 in the coupling flange 70, are arranged around the flange 70 with their studs 76 projecting through holes 72 toward the front of coupling 62. A ring shaped bracket member 84 is disposed on the front side of flange 70 over the projecting ends of studs 76, and nuts 86 on the stud ends rigidly fasten the lug fittings 74 and ring bracket 84 to the reception coupling flange 70. The inner edge 88 of each lug fitting 74 may be formed to cooperate with the cylindrical surface of coupling rim 90 to effectively maintain the lug fitting 74 so the side plates 78 are substantially parallel to a plane through the reception coupling axis and between the two side plates, however the radial relationship of the circumferentially arranged lug fittings 74 is also maintained by two lock rings 92 and 94 that respectively pass through the outer and inner sets of holes 80 and 82 in all lug fittings 74.

Since the lock rings 92 and 94 pass through each lug fitting 74, there is provided between the side plates 78 of each fitting, an outer and inner pivot support. Every other lug fitting 74 pivotally supports an outer support arm 96 between its side plates 78 on lock ring 92, and every lug fitting 74 pivotally supports an inner support arm 98 between its side plates 78 on lock ring 94. All

lug fittings 74 and arms 96 and 98 are threaded on the split lock rings 92 and 94, prior to fastening the lug fittings to the coupling flange 70, and cotter pins 99 placed in holes provided in the ends of the locking rings 92 and 94 to fix the locking rings 92 and 94 relative to the lug fittings. All arms 96 and 98 are thus pivotally disposed to be movable toward and away from the axis of the reception coupling 62 with the desired operative limit position substantially as illustrated in Figure 5, and an inoperative folded position being with both inner and outer sets of arms substantially parallel to the coupling axis. All support arms are preferably made of material that is stiff yet flexible having a streamline cross section 100 faired into outer ends 102 and 104 of substantially rectangular cross section for added strength. The outer ends 102 and 104 are forked to provide respective slots 106 and 108, and a roller or cylinder spacer 110 is retained in each of the slots by a removable pin 112 (Figure 11) to provide releasable attachment links for the loops of a parachute canopy to be fully described hereinafter. The canopy 114 is indicated in phantom lines in Figure 5, canopy 114' illustrating how a larger area canopy can be used without changing the support arms when the operating airspeeds during which refueling takes place are going to be relatively low.

When the drogue is used on a reception coupling, as illustrated, the inner support arms 98 serve as a funnel-shaped guide fence to assure entrance of the probe into the opening 68 of the reception coupling. For this reason the inner arms 98 are spaced relatively close together so the entering end of the probe cannot pass or wedge between adjacent arms, but will be positively guided toward the coupling. To provide limited outward pivotal movement, provide support and assure equi-distant spacing between the divergent inner arms 98, the slots 108 in outer ends 104 are made of sufficient depth to receive a lashing 116, preferably flexible aircraft cable. Lashing cable 116 is formed in a continuous loop and has a plurality of flanged bushings 118, swaged, brazed or otherwise suitably fixed at spaced points around the cable loop. Each inner support arm 98 receives one of the flanged bushings 118 at the base of slot 108 below the canopy loop. As shown in Figure 11, the flanges 120 of bushing 118 are disposed on either side of the slot 108 in the ends of arm 98 to prevent lateral displacement of the bushing from its position in the slot and, when the drogue is in operation with the arms 98 divergent, will accurately maintain the proper distance between the outer ends 104 of adjacent inner arms 98. If desired a similar lashing (not shown) may be used with the outer arms 96. However the divergent position of the outer arms will be controlled by the aerodynamic configuration of the canopy which, dependent upon the air speed relative to the drogue, assumes a different cross section configuration, therefore the pivotal movement of the outer arms is preferably unrestrained except for their positioning by coaction with the canopy.

Apart from the areodynamic considerations that effect the drogue structure and configuration, the probe guide arms, as will be appreciated, must be able to withstand relatively heavy side thrusts resulting from poor aiming by the pilot of a following aircraft. At lower airspeeds the small cross sectional dimension of the probe guide arms 98 can be increased to withstand higher side bending stresses, however as higher airspeeds are reached, the aerodynamic drag resulting from overly heavy probe guide arms is undesirable. Furthermore such heavy guide arms will effect the airflow through the center of the drogue thus effecting the drogue operational characteristics. According, as illustrated in Figures 5, 7 and 8, additional flexible lashings 121 may be positioned around the inner support arms 98 at one or more spaced locations between the ends of the arms. Lashings 121 may be any suitable material capable of maintaining a fixed hoop circumference under tension, such as the flexible cable lashing 116 or the chain lashing 121. When chain lashing 121 is used, it preferably includes special flanged bushing links 122 equidistantly spaced at intervals along the chain. Bushings 122 are disposed in notches 123 formed on the outer edge of arms 98 and the chain lashing 121 will thereby permit pivoting of arms 98 to their divergent limit position but will resist any side thrusts of the probe from forcing the arms apart or bending and deforming them. The chain is maintained in the notches 123 by small clips 124 pinned to the arms.

Canopy

A rearwardly disposed ring type drag structure is essential on the drogue of this invention and a ring shaped collapsible canopy is preferred. To overcome the tendency to squid and partially or wholly collapse, present in previously known ring type parachutes, a new ring-foil-slot type canopy has been developed as one phase of this invention. Although the airfoil, ribbon, and other prior art ring type canopies can be used with varying results as the drag element of this drogue, by far the best results will be realized by using the ring-foil-slot type now described.

A section of a typical ring-foil-slot drogue canopy 114 is shown in Figure 12. The illustrated example of the canopy includes thirty-six single or eighteen double trapezoidal shaped sections 144 formed of three sub-panels, with a radial width of eleven inches, fabricated with two slots 146 and 148, and joined at their non-parallel edges to form a ring consisting of three concentric ring shaped panels 150, 152 and 154 separated by discontinuous slots 146 and 148.

It has been previously stated that the canopy can be made of a number of materials which could be selected dependent upon conditions of use. Keeping in mind variable fabric characteristics it will be seen that canopy performance can be varied by changing fabric porosity, i. e., the foregoing exemplary canopy made out of material such as nylon fabric of high porosity, e. g., in order of 150–200, can be used for high speed operation, and made out of nylon of low porosity, e. g., in the order of 50–90, can be used for low-speed operation. The values of porosity represent conventional porosity ratings used on fabrics and are values of cubic feet/square feet/minute flow at ½ inch water pressure.

In Figures 12 and 13 a typical fabrication pattern for a nylon canopy 114 is disclosed. The skirt hem 156 is relatively heavy nylon webbing fastened around the perimeter of the outer ring panel 150. Along the radial seam between each trapezoidal panel 144 is a double radial nylon webbing 158. If the trapezoidal panels 144 are of double construction, radial webs 158 are also stitched along the center of each panel. The vent opening, formed by the inner perimeter of inner ring panel 154, is reinforced by a nylon tape 160. All other bindings along the edges of the ring panels consist of Celanese or nylon tape 162. Riser arm retaining cords 164 and 166, made of braided, coreless nylon, are fastened on the lower side of the canopy along the skirt hem web 156 and along the vent reinforcement tape 160 with zigzag stitching 168. Stitching 168 is interrupted wherever the vent cord 166 passes across a radial web 158 and wherever the skirt hem cord 164 passes across every other radial web 158, to outer arm attachment loops 170 at every second radial web along the canopy skirt edge 156 and inner arm attachment loops 172 at every radial web along the vent edge 160. Additional radial reinforcing is provided between each outer loop 170 and its corresponding inner loop 172 by a length 174 of the braided, coreless nylon cord 174 having one of its ends passed into the braided loop 170, along its hollow center and out again as indicated at 176. The free end of the cord 174 is then inserted into its own body at 178 and passed in a short way to a position indicated at 179. The cord is then stitched to the radial web 158. The opposite end of

cord 174 is woven through the inner loop 172, back into itself and stitched to the radial web 158 in the same manner. All seams are reinforced with zigsag stitches as illustrated. To make the canopy larger or smaller for the same drogue riser arm installation, the inner canopy diameter should be maintained constant and the area of fabric increased or decreased around the outer perimeter.

The center ring panel 152 in the disclosed canopy is a single panel but it is contemplated that larger canopies may incorporate two or more center ring panels with enlarged inner and outer ring panels. The design objective of this ring-foil-slot canopy is to achieve the major drag load with the central ring panel (or panels) disposed essentially normal to the free air stream. The outer and inner ring panels 150 and 154 respectively, are intended to perform the primary function of developing the outer and inner hoop tension in the drogue to an optimum magnitude for retaining the divergent expanded shape under load, without squidding or partially collapsing, through a wide speed range. The radial tension vectors developed by the air foil characteristics of the inner and outer ring panels must be of sufficient magnitude to exceed the normal drag force of substantially normally disposed central ring panels. Using a freely pivoted set of outer support arms 96 the active shape of the canopy section (Figure 14) can vary under loads imposed by varied air stream velocities until there exists a balancing of normal drag vectors and radial tension vectors to enable the canopy to retain a full non-collapsing configuration. Thus the critical velocity limits of the drogue extend over a relatively wide range.

It is preferable that strut cross section should be faired or streamlined for high airspeed operation although not necessarily for lower airspeeds. At high speed, rectangular struts start vibrating and induce a flutter in the leading edges of the canopy. Although such vibration has little operational effect on the ring-foil-slot canopy its effect on a ribbon type canopy renders such a chute impotent as it destroys the lifting action of the ribbons and the chute will squid and progress to complete collapse. Furthermore, such vibrations have a wear effect on any canopy and therefore is undesirable, regardless of the type canopy used.

Enclosure tube

A modified enclosure tube 180 is illustrated in Figure 15 and consists of a tubular portion 182 with a frusto-conical fairing 184 fixed as by welding at one end. A reinforcing frusto-conical ring 185 is welded to the exterior surface of the fairing 184 to provide a structure to which bracing members 186 are welded. Members 186 may be rigidly fixed to aircraft frame structure with the tube fairing opening from the bottom of the aircraft as shown in Figure 3, or the members 186 may be fixed to a movable structure whereby the tubular enclosure 180 can be tilted toward an opening 187 (Figure 16) in the bottom of an aircraft or pod structure, provided with a closure member 188.

Upon retraction of the drogue 60 by reeling in the hose 189 the reception coupling 62 passes into the enclosure tube 180 and the tube fairing 184 will pivot the support arms to a position parallel with the reception coupling axis collapsing the canopy and removing it from the air stream. As the reception coupling 62 is pulled through the tubular part 182 it engages a cage arrangement 190 made of rigid welded rods. At several points, preferably at either side, an elongated rod 191 is rigidly fixed to the cage 190 and extends parallel to and along the outside of the tubular part 182, into a cylinder 192 welded to support members 182. A coil spring 193 is disposed inside cylinder 192 encircling the rod 191 and is retained between a cylinder end cap 194 and a washer 195 fixed to the end of rod 191 by a nut 196. The opposite end of cylinder 192 may be left open or closed with a removable cap to provide access for disassembly of the coil spring and rod assemblies. Movement of cage 190 to the left in Figure 15 by the reception coupling 62 will compress the springs 193 in cylinders 192 thereby providing an ejection mechanism for the drogue when extension is again desired. Cooperation of the cage rods 191 with cylinders 192 guide and support the cage relative to the enclosure tube during movements of the cage. A latch (not shown) may be provided to retain the cage in spring loaded position and relieve the hose from the spring tension while the drogue is maintained in a retracted condition. The latch can be disengaged by a control system prior to extension of the drogue and hose.

Alternative pivot assemblies

Figures 17 and 18 illustrate a slightly modified version of the drogue shown in Figures 5–9 enabling greater ease of installation of the support arm pivot lugs 74'. Lugs 74' have a tapped hole 126 in their base in lieu of the stud 76, and rather than being mounted directly on the reception coupling are fastened in groups on sectors 127 of a ring 128 by screws 130. As shown, the ring 128 is divided in four parts, each being a 90° sector, but a greater or less number of parts of appropriate sectoral angle may be used. Each sector 127 carries one-fourth of the lug fittings 74'. The outer and inner riser arms 96 and 98 are pivotally retained in their respective lug fittings 74' by means of locking ring segments 132 and 134. Cotter pins 136 are placed in holes at the ends of the locking ring segments 132 and 134 to prevent displacement of the ring segments from the lug fittings 74'. Each sector 127, arms 96 and 98 and a set of locking ring segments 132 and 134, thus constitute a subassembly that can be removed and replaced from the coupling without disturbing the remaining sectoral subassemblies. Each assembled sector 127 is fastened to flange 70' of the reception coupling by screws 138, that also retain the cover bracket 84'.

In Figures 19, 20, 21 and 22 a third embodiment of the support arm pivot structure is illustrated. The pivot assembly 200 consists of three ring members 202, 204 and 206 formed to interengage and retain two pivot locking rings or ring assemblies 208 and 210 in fixed position. The principal and central ring member 202 has a continuous annular section 212 integrally formed with inner and outer radially projecting flanges 214 and 216 respectively. A series of circumferentially spaced radial slots 218 intersect the annular section 212 and extend through the flanges 214 and 216. A discontinuous annular groove 220 is formed on the inner cylindrical wall of annular section 212 adjacent the inner flange 214 and intersecting slots 218; and a similar discontinuous annular groove 222 is formed on the side face of the outer flange 216 adjacent the annular section 212 and intersecting slots 218. Inner ring member 204 and outer ring member 206 have slots 224 and 226 respectively, formed in one edge and, in assembly, respectively fit within and around the annular section 212 of the principal ring member 202 abutting flanges 214 and 216 and with appropriate slots 218, 224 and 226 aligned. Each set of aligned slots 218, 224 and 226 with the respective bridging portions of locking rings 208 and 210 constitute a pivot means providing attachment for either one or two canopy support arms (96 and 98) as required. When assembled the base edges of all three rings are in the same plane and the discontinuous annular grooves 220 and 222 effectively constitute annular passages, discontinuous at each slot.

A series of circumferentially spaced tapped holes 228 are formed in the base of the central ring member 202 to enable attachment of the pivot ring assembly to a reception coupling flange 70' by screws 230. When fastened to a mounting flange 70' the inner and outer rings 204 and 206 are locked in their assembled relation.

Prior to assembly of the three rings 202, 204 and 206 the appropriate inner canopy support arms 98 are "threaded" on a locking ring 208 which is then placed

in the inner groove 220 of ring member 202 with one support arm 96 disposed in each shaft 218. The outer canopy support arms 98 are "threaded" on a locking ring 210 which is placed in the outer groove 222 with the arms preferably in every other slot 218. Inner and outer ring members 204 and 206 are placed in assembled position on ring member 202 thereby retaining locking rings 208 and 210 as fixed circumferential journal means for a plurality of support arm pivots, and the entire pivot and support arm assembly fastened to the flange 70' of a reception coupling or other body. Rings 208 and 210 may be split in several segments, e. g., four ninety degree segments, which in assembly have their ends abutting. Using a split segment ring the support arms 96 and 98 can be installed and removed in small groups. If desired, each arm can include firmly fixed pivot pins (not shown) in the lower end, enabling individual assembly and removal of arms in the ring assembly 200.

At the annular abutment between inner ring member 204 and the principal ring member 202, the surfaces 238 and 240 may be complementarily beveled, as illustrated, to assure that no portion of the edge of inner ring 204 projects beyond the inner periphery of the inner flange 214 to snag the tip end of an incoming probe.

Single arm collapsible drogue

Illustrated in Figure 23, is a still further embodiment of a collapsible aerodynamic drag device 250 showing the use of one row of canopy support arms 252 as combined guiding and supporting arms for attachment to the outer perimeter 254 of a modified ring-foil canopy 256.

The canopy 256 may have solid panels, as illustrated in Figure 23, or it can be of the ring-foil-slot type previously described. The outer perimeter 254 of the canopy is to be constructed in a manner similar to that shown in Figure 2 with attachment loops 258 provided in alignment with the seams between panels for connection to the support arms 252 in a manner similar to that illustrated in Figure 11. A lashing 260, similar to the cable 116 in Figure 11, interconnects the ends of the pivoted arm, adjacent the canopy, and limits the conical divergence of arms 252. Sewn into the seam of the inner perimetral edge 262 of canopy 256 is a continuous loop flexible cable 264, of fixed circumference, which forms a circle when canopy 256 is deployed under an air load. When the canopy is in its circular dynamic shape, the inner perimetral cable 264 has smaller diameter than the canopy outer perimeter, as determined by the lashing cable 260, so the canopy material disposed between the two cables will constitute a ring shaped infinite air foil having a desired angle of attack relative to the free air stream.

At circumferential intervals on the inner side of the canopy 256, preferably between each canopy panel and in radial alignment with a support arm 252, substantially segmental shaped members 266, which can be made of the same material as the canopy, are sewn into the radial seam between adjacent panels to form a plurality of shaped pocket sections 268 around the ring canopy. The chord line 270 of each segmental member 266 limits the distance between the outer perimeter 254 of the canopy and the inner perimeter 262 to less than the width of canopy material thereby assuring a proper amount of canopy material to result in a cross-sectional longitudinal curvature to obtain the desired drag on the canopy. It is desirable to reinforce the chord line 270 of each arcuate member 266, for example, if nylon material is used for the arcuate members the chord line would be hemmed with a heavy nylon stretch resistant tape. By thus controlling the canopy cross section to provide a ring-foil canopy rather than a frusto-conical wind sock, at least a predetermined portion of the canopy area will be maintained substantially normal to the free air stream creating the required amount of high drag force and further enabling the radial tension vectors to develop the canopy and retain it in the required deployed shape.

The substantially segmental members 266 can be curved with true arcs or with any desired curvature compatible with proper air-foil profile. When a ring-foil-slot canopy, such as canopy 114 in Figures 12–14, is used as the canopy for the single arm drogue of Figure 23, the segmental members have a curvature to conform substantially with that illustrated in Figure 14 to properly deploy the inner and outer ring panels 154 and 150 for development of the opposing radial tension vectors which enable the canopy to maintain its shape under dynamic loads.

The pivotal attachment of arms 252 to the reception coupling, or the like, may utilize any of the pivotal attachments previously described, the preferred type being a sectional ring similar to that illustrated in Figures 19–22. Such a sectional ring 272 will consist of two slotted rings 273 and 274, rather than the three rings of Figures 19–22, providing an annular set of pivot journals for one annular set of pivoted arms. This single arm modification can also utilize intermediate lashing means 121, illustrated in Figure 5, for preventing probe nozzles from penetrating the space between adjacent guide arms.

It will be appreciated that this invention comprises a basic concept for an aerodynamic drag device using a ring shaped rearwardly offset drag element fixed to a structure by flexible elongate support arms arranged to permit fluid stream flow through the inner periphery of the ring. The drag device is rendered highly flexible in adaptation to various uses by providing pivotal connections between one end of the support arms and the primary support structure and in using a collapsible ring shaped canopy releasably attached to the other ends of the pivotal arms. Various modifications of the arrangement of the pivot mounting structure show the versatility envisaged by this invention. All such features utilized together result in a refueling hose drogue that provides a stability, good wake pattern, wide range of operating airspeed, and excellent target conditions never before attained by drogues known and used prior to this invention. When used with the novel ring-foil-slot canopy the drogue operating characteristics are materially improved over characteristics when using other presently known types of parachutes.

The invention may be embodied in other specific forms without departing from the spirit or essential characteristics thereof. The present embodiments are therefore to be considered in all respects as illustrative and not restrictive, the scope of the invention being indicated by the appended claims rather than by the foregoing description and all changes which come within the meaning and range of equivalency of the claims are therefore intended to be embraced therein.

What is claimed and desired to be secured by United States Letters Patent is:

1. A drogue construction for use in a probe and drogue refueling system comprising: a reception coupling member; a series of probe guide arms attached to said coupling member; and ring shaped canopy drag means connecting and operative to maintain said probe guide arms in the locus of a cone when said drogue is subjected to dynamic operating conditions.

2. A drogue construction for use in a probe and drogue refueling system comprising: a reception coupling member; a series of probe guide arms attached to said coupling member; a parachute means attached to said probe guide arms and operative to hold said arms apart from one another when said drogue is subjected to dynamic operating conditions.

3. A drogue construction for use in a probe and drogue refueling system comprising: a reception coupling member; a series of probe guide arms pivotally attached to said coupling member; a second series of arms pivotally

attached to said coupling member; and a collapsible ring-shaped canopy structure attached to all of said arms and adapted under dynamic conditions to hold said probe guide arms in a divergent conical arrangement.

4. A drogue construction, for use in a probe and drogue refueling system, which comprises: a reception coupling member; journal means, including a series of pivots, rigidly secured to said coupling member; a series of probe guide arms secured to said pivots so as to be capable of movement on said pivots; and collapsible annular drag means on said arms for moving said probe guide arms into the locus of a cone when said drogue is subjected to the air flow of a relatively moving air stream.

5. A drogue construction, which comprises: a coupling; a first series of pivots rigidly secured to said coupling; a series of arms attached to said first pivots so as to be capable of moving about said first pivots; a second series of pivots rigidly secured to said coupling; a series of parachute support arms attached to said second pivots so as to be capable of movement about said second pivots; and a ring-shaped parachute attached to said arms and said parachute support arms, said parachute serving to hold said arms apart from one another during the operation of said drogue.

6. In probe and drogue type aerial refueling apparatus having a hose adapted to be moved in and out of an aircraft; a reception coupling connected to an end of the hose; a plurality of pivot means disposed on said coupling; a plurality of journal means carried by said pivot means, disposed in two coaxial groups and having axes normal to the axis through said coaxial groups, a plurality of elongate substantially rigid members each pivotally fastened at one end to an associated journal means and arranged to pivot between a position where all members are substantially parallel with each other and a position where all members of each group are divergent from the other members of the respective group; a collapsible ring shaped canopy having its inner periphery fastened to the other ends of one of said groups of members and its outer periphery fastened to the other ends of the other of said groups of members; and means associated with the members of said one group for limiting divergent pivotal movement of said one group of members to thereby provide convergent guide means from the inner periphery of said canopy to said reception coupling.

7. A refueling apparatus as defined in claim 6, wherein said one group of members is disposed substantially within the other group of members and the number of members included in said one group providing a spacing between members to prevent passage of a refueling probe between adjacent members when said members are in their divergent limit positions.

8. A refueling apparatus for inflight refueling comprising: support structure; a reel mounted on said support structure; a hose attached to said reel for extension and retraction from said support structure; a tubular storage device fixed to said support structure through which said hose is adapted to extend; a reception coupling fixed to the end of said hose, adapted to receive a probe from a second structure; and having an external configuration capable of passing through said tubular storage device; and an aerodynamic drag device comprising a plurality of journal means spaced around and fixed to said reception coupling, a plurality of substantially rigid elongate members each having one end pivotally mounted on an associated journal means, a collapsible ring shaped drag structure fastened to the other ends of said members and when open holding said members in a position divergent from said coupling, said members being pivotable to a position wherein all of said members are substantially parallel and said drag structure being collapsible behind said coupling upon retraction and to permit retraction of said coupling and drag device into said tubular storage device.

9. In a probe and drogue type inflight refueling apparatus, a conduit adapted to trail a tanker aircraft and having at its outer end a reception coupling adapted to receive a coupling probe from another aircraft, and means for steadying said reception coupling for entry of said coupling probe comprising an annular parachute and a probe guide means comprising substantially rigid members supporting said annular parachute on said reception coupling end of the conduit and providing in flight a rearwardly extending coupling stabilizing drag through which the probe is adapted to project into said reception coupling.

10. In the refueling apparatus defined in claim 9, said probe guide means for supporting said annular parachute comprising a plurality of arms with ends pivotally attached to the reception coupling and parachute and defining a generally conical open frame structure between the reception coupling and the parachute.

11. In probe and drogue type inflight refueling apparatus, a conduit adapted to trail a tanker aircraft and having at its outer end a reception coupling adapted to receive a coupling probe from another aircraft, and a collapsible conical guide and annular drag structure operably connected to said coupling which in flight is divergently extended rearwardly of said reception coupling to receive the probe.

12. An aerodynamic drag device comprising a support with a circumferential portion, a plurality of pivot means circumferentially spaced around and mounted on said circumferential portion of said support, a plurality of substantially rigid elongate members each having one end pivotally mounted on an associated pivot means, a collapsible ring shaped drag structure with its inner periphery forming an opening larger than said circumferential portion of said support for unrestricted passage through said drag structure to and from within said elongate members, said collapsible ring shaped drag structure being fastened to the other ends of said members, and annular means carried by said drag device for engaging and limiting pivoted swinging movement of at least a portion of said members to a first position whereby said members diverge from said support and permitting pivotal movement of at least a portion of said members to a second position whereby said members are all substantially parallel.

13. An aerodynamic drag device comprising a support, a plurality of relatively rigid elongate members with one end of all of said members mounted on said support so said members extend divergently from said support, said members having a configuration providing a low drag coefficient, a ring shaped drag structure with its inner periphery forming an opening larger than the perimetral boundary of the mountings of said elongate members for unrestricted passage through said drag structure to and from within the divergent members, said ring shaped drag structure being fastened to the other ends of said members, said drag structure having a high drag coefficient relative to the low drag coefficient of said members and annular lashing means engaging at least a portion of said plurality of members to help maintain the limited divergent relationship of said members.

14. An aerodynamic drag device comprising: a support; a plurality of relatively rigid elongate members with one end of all of said members mounted on said support, disposed in two coaxial spaced apart annular groups, each group providing a conically divergent series of spaced members; and a ring shaped canopy with its inner periphery fastened to the other ends of the members in one group and its outer periphery fastened to the other ends of the members in the other group.

15. An aerodynamic drag device comprising: a support; mounting means comprising a plurality of pivot means disposed in two annular coaxial groups on said support and a plurality of substantially rigid elongate members each having one end pivotally mounted on an

associated one of said pivot means with the pivot axes normal to an axis through said two annular groups; and a ring shaped collapsible canopy with its inner periphery fastened to the other ends of the members pivotally mounted on one group of said pivot means and the outer periphery fastened to the other ends of the members pivotally mounted on the other group of said pivot means.

16. An aerodynamic drag device as defined in claim 15 wherein lashing means interconnects the members of one of said groups.

17. In probe and drogue type aerial refueling apparatus having a hose adapted to be reeled in and out of an aircraft: a reception coupling connected to an end of the hose; a plurality of lugs disposed on one end of said coupling; a plurality of pivot journal means retained by said lugs and disposed in two coaxial groups with journal axes normal to the axis through said reception coupling and coaxial groups; a plurality of relatively rigid elongate members each pivotally mounted at one end to an associated journal means constituting an inner and outer coaxial group of members arranged to pivot between one position where all members are substantially parallel with each other and a second position where all members of each group are divergent from the other members of the respective group; a collapsible ring shaped parachute canopy having its inner periphery fastened to the other ends of the members in said inner group and its outer periphery fastened to the other ends of the members in said outer group; and means associated with the members of said inner group for acting upon and limiting divergent pivotal movement of said inner group of members and thereby providing convergent guide means from the inner periphery of said canopy to said reception coupling.

18. Refueling apparatus as set forth in claim 17 wherein said lugs are disposed on a multiple section mounting ring and said multiple sections are individually fastened to the end of said reception coupling.

19. An aerodynamic drag device comprising a support, a plurality of relatively rigid elongate members arranged in an annular group with means pivotally mounting one end of said members on said support enabling said members to extend divergently from said support, a ring shaped collapsible drag structure with its inner periphery forming an unrestricted passage to and from within said divergent members and having a high drag coefficient relative to said elongate members, and means releasably connecting said ring shaped drag structure to the other ends of said members.

20. An aerodynamic drag device comprising; a support; a plurality of substantially rigid elongate members secured at one end to said support, disposed in coaxial inner and outer annular groups, each group providing a conically divergent series of spaced members; and a ring shaped canopy comprising at least three concentric ring panels with discontinuous slots provided between the three ring panels, the inner periphery of the inner ring panel fastened to the other ends of the members in said inner group and the outer periphery of the outer ring panel fastened to the other ends of the members in said outer group.

21. An aerodynamic drag device comprising: a support; a plurality of substantially rigid elongate members secured at one end to said support, disposed in coaxial inner and outer groups, each group providing a conically divergent series of spaced members; and a ring shaped canopy comprising at least three concentric ring panels connected to each other to provide discontinuous slots between inner, center and outer panels; a plurality of attachment loops fastened on the inner and outer perimeters of said canopy and means provided in the other ends of said members for fastening the inner perimeter loops to the inner group of members and the outer perimeter loops to the outer group of members.

22. An aerodynamic drag device comprising a support member, a plurality of elongate support arms with means mounting one end of said arms on said support member to form two coaxial groups of arms; a collapsible ring shaped canopy comprising at least three concentric ring panels, radial reinforcing members connecting said ring shaped panels to each other to provide discontinuous slots between adjacent ring panels, said canopy having its inner perimeter fastened to one group of said support arms and its outer perimeter fastened to the other group of said support arms; and an annular stress resisting member fastened adjacent the support arm connections to said inner perimeter.

23. An aerodynamic drag device comprising: a support member; a plurality of elongate support arms with means mounting one end of said arms on said support to form two coaxial groups of arms; a collapsible ring shaped canopy comprising at least three concentric ring panels, radial reinforcing members connecting said ring shaped panels to each other to provide discontinuous slots between adjacent ring panels, and means fixed to the inner perimeter of the innermost ring panel and to the outer perimeter of the outermost ring panel providing attachment means, each radially aligned with a radial reinforcing member; and means fastening the inner attachment means to one of said coaxial groups of support arms and the outer attachment means to the other of said coaxial group of support arms.

24. An aerodynamic drag device comprising: a support, a plurality of pivot means disposed as an annular group on said support, a first plurality of realtively rigid elongate members equal in number to said pivot means and each having one end pivotally mounted on an associated one of said pivot means constituting a first annular group of elongate members, a second plurality of relatively rigid elongate members pivotally mounted on associated ones of said pivot means and constituting a second annular group of elongate members disposed around said first group of members, and a ring shaped collapsible parachute canopy with its inner periphery fastened to the other ends of the members of said first group and its outer periphery fastened to ends of the members of said second group.

25. An aerodynamic drag device as defined in claim 24 wherein annular flexible lashing means interconnect all members of said first group.

26. An aerodynamic drag device as defined in claim 25 wherein the members of said first group are formed with slotted recesses having closure means on the members, and said flexible lashing means comprises at least one endless lashing with a plurality of flanged bushings fixed thereto at spaced intervals and disposed in interlocked relationship in said slotted recesses of said members.

27. An aerodynamic drag device as defined in claim 26 wherein said slotted recesses are provided in the ends of the members of said first group and the closure means comprise a pin device disposed in said member across said slot.

28. An aerodynamic drag device as defined in claim 26 wherein said slotted recesses are provided in the members of said first group, each recess being transverse to the elongate shape of and on the radially outer side of the associated member, and the closure means comprises a clip device fixed to said member across the opening of said slot.

29. An aerodynamic drag device as defined in claim 26 wherein each of the members of said first group are formed with at least two spaced apart slotted recesses and said flexible lashing means comprises at least two endless lashings disposed in different slots in each of said members.

30. An aerodynamic drag device as defined in claim 24 wherein said ring shaped canopy comprises at least three

ring shaped concentric panels and radial reinforcing members connecting said ring shaped panels to each other to provide discontinuous slots between adjacent ring panels.

31. An aerodynamic drag device as defined in claim 24 wherein said support comprises a plurality of separate sections, each section having a portion of said pivot means disposed thereon.

32. An aerodynamic drag device as defined in claim 24 wherein said plurality of pivot means comprise a plurality of independent lugs independently fastened to said support.

33. An aerodynamic drag device as defined in claim 24 wherein said plurality of pivot means comprise a plurality of independent lugs and an annular fitting carrying all of said lugs with means fastening said annular fitting to said support.

34. An aerodynamic drag device as defined in claim 24 wherein said plurality of pivot means comprises a plurality of interlocking radially slotted ring members carrying journal means intersecting all slots.

35. An aerodynamic drag device comprising a support structure; a plurality of forked lug elements mounted on and spaced around said support structure, the forked end of each lug element including two sets of holes and disposed so each set of holes in adjacent lugs are aligned to provide two coaxial rows of holes, a locking ring disposed through each aligned set of holes in all of said lug elements, a first group of relatively rigid elongate arms equal in number to said lug elements each pivotally mounted at one end on one of said locking rings in the fork of one of said forked elements, a lashing connecting to each of said arms to limit the pivotal movement of said arms to a divergent conical arrangement, a second group of relatively rigid elongate arms each pivotally mounted at one end on the other of said locking rings in the fork of an associated lug element, a collapsible ring shaped parachute canopy, and means connecting the inner perimeter of said canopy to said first group of arms and the outer perimeter to said second group of arms.

36. An aerodynamic drag device as defined in claim 35 wherein said support structure comprises a sectional annular ring, each section having a portion of said lug elements fixed thereto; and said locking rings comprise a plurality of arcuate rod segments corresponding in number to the sections of said annular ring.

37. An aerodynamic drag device comprising: a support, a plurality of relatively rigid elongate members, means mounting one end of said members on said support to enable said members to extend divergently from said support, a ring shaped air foil canopy having its outer perimeter fastened to the other ends of said members, and annular means, with a fixed peripheral dimension, fastened integral to the inner perimeter of said canopy.

38. An aerodynamic drag comprising a support, a plurality of relatively rigid elongate support members, means mounting one end of said members on said support enabling said members to extend divergently from said support, a collapsible ring shaped air foil type parachute canopy having its outer perimeter fastened to the other ends of said members and having an annular cable of fixed circumferential dimension less than said outer perimeter secured to the inner perimeter of said canopy, and a plurality of members fastened between the inner and outer perimeter of said canopy to provide a maximum limit spread between the inner and outer canopy perimeters less than the width of the canopy between perimeters during canopy deployment under dynamic conditions.

39. A supporting structure for pivotally carrying the support arms of a ring type canopy having inner and outer coaxial groups of support arms comprising: a plurality of concentric radially slotted interlocking ring members and at least two coaxial locking ring means enclosed in said ring members, each ring means intersecting slots in said ring members, whereby two coaxial groups of pivot journals are provided, each group of which is to pivotally carry a respective one of the two coaxial groups of said canopy supports.

40. A supporting structure for pivotally carrying the support arms of a ring type canopy having at least one annular group of support arms comprising: at least one ring means, and a plurality of concentric radially slotted interlocking ring devices enclosing said ring means whereby said ring means intersects said slots in said ring devices, to provide at least one annular group of pivot journals for pivotally carrying the annular group of support arms.

41. An aerodynamic drag device comprising: a support; a plurality of relatively rigid elongate members; means mounting said members at one of their ends to said support enabling said members to extend in a divergent trailing manner from said support, and a collapsible ring shaped parachute fastened to the other ends of said members.

42. An aerodynamic drag device as defined in claim 41, wherein said support is a coupling; said means mounting said members includes a series of pivots and means mounting said series of pivots on said coupling so as to be capable of rotating about said coupling; said relatively rigid elongate members includes a series of relatively rigid parachute support arms pivotally attached to said pivots so as to be capable of movement about said pivots; and said collapsible ring-shaped parachute is connected to said arms for moving said arms into the locus of a cone when said drag device is subjected to the air flow of a relatively moving air stream.

43. An aerodynamic drag device as defined in claim 41, wherein said support is a coupling; said means mounting said members includes a first series of pivots mounted on said coupling so as to be capable of rotating about said coupling and a second series of pivots attached to said coupling so as to be capable of rotational movement about said coupling; said relatively rigid elongate members include a series of relatively rigid arms pivotally attached to said first pivots so as to be capable of movement about said first pivot and a series of relatively rigid parachute support arms attached to said second pivots so as to be capable of movement about said second pivots; and said collapsible ring-shaped parachute is attached to said arms and said parachute support arms, said parachute serving to hold said arms apart from one another during the operation of said drag device.

References Cited in the file of this patent

UNITED STATES PATENTS

1,464,339	Radon	Aug. 7, 1923
1,722,509	Thomasson	July 30, 1929
1,728,449	Seversky	Sept. 17, 1929
2,582,609	Steele	Jan. 15, 1952
2,692,103	Cobham et al.	Oct. 19, 1954
2,746,699	Hart	May 22, 1956
2,759,694	Lemoigne	Aug. 21, 1956
2,761,636	Finlay	Sept. 4, 1956

FOREIGN PATENTS

281,881	Great Britain	Dec. 15, 1927
369,228	Great Britain	Mar. 16, 1932
497,289	Great Britain	Dec. 16, 1938

U. S. DEPARTMENT OF COMMERCE

PATENT OFFICE

CERTIFICATE OF CORRECTION

Patent No. 2,823,881 February 18, 1958

Richard F. Patterson

It is hereby certified that error appears in the printed specification of the above numbered patent requiring correction and that the said Letters Patent should read as corrected below.

Column 19, line 54, after "drag" insert -- device --.

Signed and sealed this 8th day of April 1958.

(SEAL)
Attest:
KARL H. AXLINE
Attesting Officer

ROBERT C. WATSON
Commissioner of Patents