(No Model.) 2 Sheets—Sheet 1.

C. N. SMITH.

EXTENSION TABLE.

No. 590,915. Patented Sept. 28, 1897.

Fig. 1.

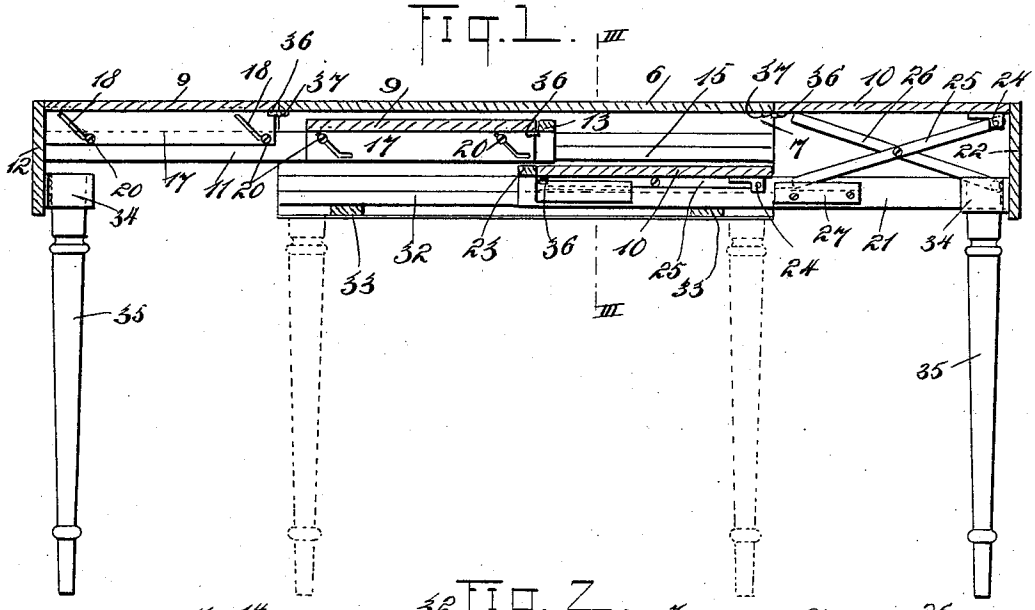

Fig. 2.

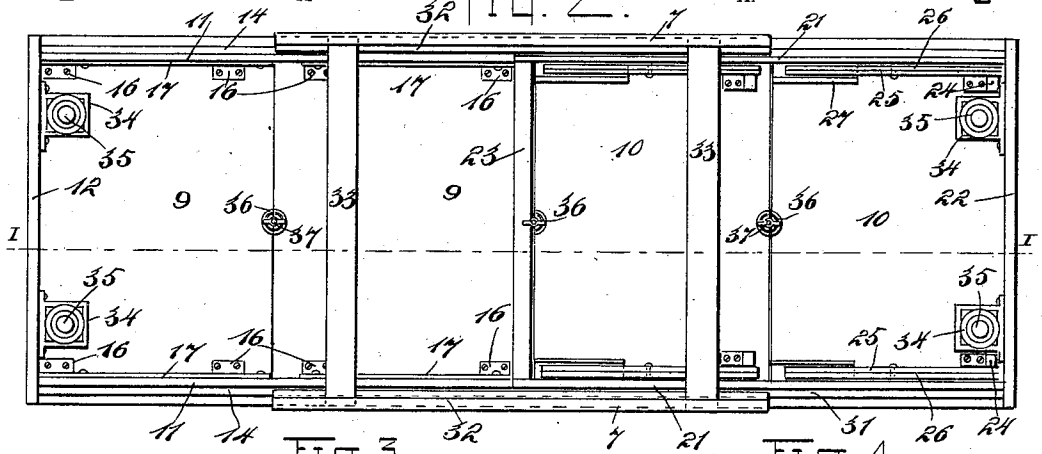

Fig. 3.

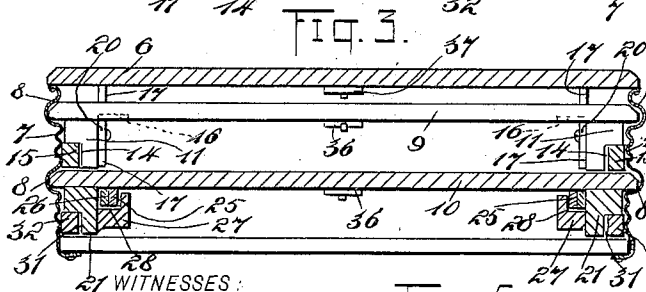

Fig. 4.

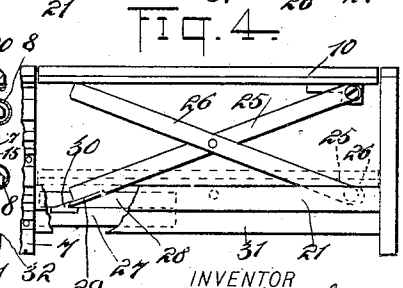

Fig. 5.

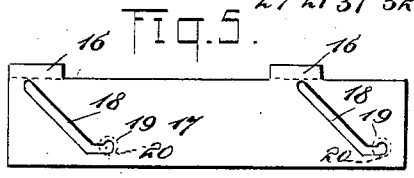

WITNESSES:

H. Hellyer

Isaac B. Owens

INVENTOR

C. N. Smith

BY [signature]

ATTORNEYS.

THE NORRIS PETERS CO., PHOTO-LITHO., WASHINGTON, D. C.

(No Model.) 2 Sheets—Sheet 2.

C. N. SMITH.

EXTENSION TABLE.

No. 590,915. Patented Sept. 28, 1897.

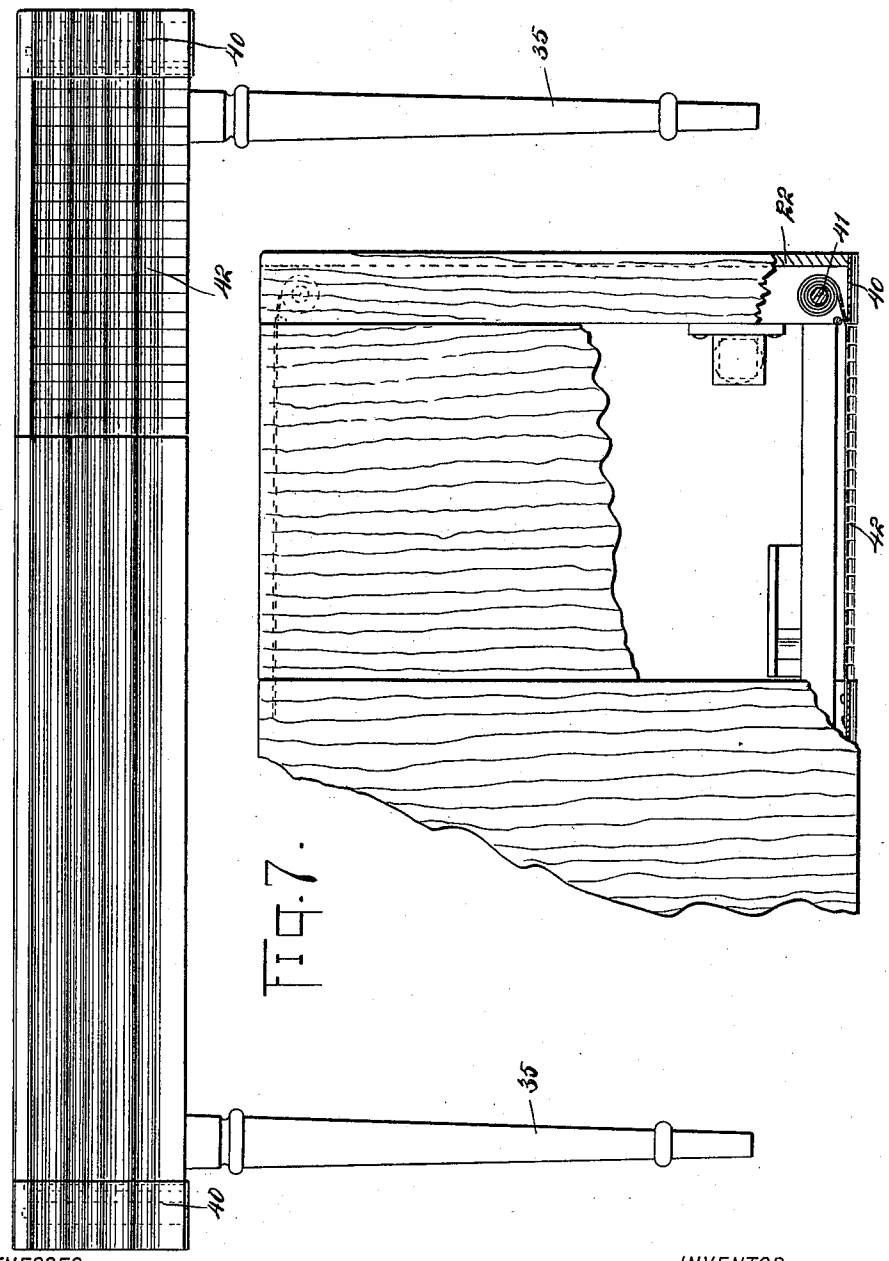

Fig. 6.

Fig. 7.

WITNESSES:

H. Hellyer.

Isaac B. Owen

INVENTOR

C. N. Smith.

BY

ATTORNEYS.

THE NORRIS PETERS CO., PHOTO-LITHO., WASHINGTON, D. C.

UNITED STATES PATENT OFFICE.

CHRIS N. SMITH, OF ELGIN, ILLINOIS, ASSIGNOR OF ONE-HALF TO WILLIAM HORACE GILBERT, OF SAME PLACE.

EXTENSION-TABLE.

SPECIFICATION forming part of Letters Patent No. 590,915, dated September 28, 1897.

Application filed March 16, 1897. Serial No. 627,795. (No model.)

To all whom it may concern:

Be it known that I, CHRIS N. SMITH, of Elgin, in the county of Kane and State of Illinois, have invented a new and Improved Extension-Table, of which the following is a full, clear, and exact description.

This invention relates to an improvement in that class of extension-tables in which a stationary main frame is provided and extensible leaves are held beneath the main frame in position to be drawn out when it is desired that the table be increased in size.

The invention will be fully described hereinafter and defined in the claims.

Reference is to be had to the accompanying drawings, forming a part of this specification, in which similar characters of reference indicate corresponding parts in all the figures.

Figure 1 is a longitudinal section of my invention on the line I I of Fig. 2. Fig. 2 is a bottom plan view. Fig. 3 is a cross-section on the line III III of Fig. 1. Fig. 4 is a fragmentary side elevation of the invention. Fig. 5 is a plan view of one of the lifting and supporting plates for the extensible sections of the table. Fig. 6 is a side elevation of a table constructed after my invention and having a curtain attachment, and Fig. 7 is a plan view of the same with parts broken away.

The top 6 of the main or stationary section has rigidly attached to each side edge a metallic plate 7. The metallic plates 7 are corrugated longitudinally to strengthen them and are each provided with two extraordinary corrugations 8, the corrugations 8 being respectively horizontally alined with each other in each plate 7 and forming guides in which the leaves 9 and 10 of the two extensible sections respectively slide.

The leaves 9 are carried by an extension-section formed of two transverse rails 11, rigidly joined at their outer ends by an end plate 12 and at their inner ends by a cross-bar 13. Each rail 11 is provided at the lower portion of its outer side with a groove 14, running longitudinally through it. These grooves respectively receive the track-rails 15, which are secured, respectively, to the metallic plates 7 in position to support the rails 11. There are two leaves 9, and each leaf has secured thereto, by means of horizontally-extending ears 16, two lifting and supporting plates 17. The plates 17 are duplicates of each other, and each plate has a diagonally-extending slot 18 formed therein, the lower end of each slot having a horizontal offset 19. The slots 18 respectively receive pins 20, carried by the respective rails 11. The dotted circles in Fig. 5 indicate the position occupied by the heads of the pins 20. The arrangement of the leaves 9 and the plates 17 with reference to the rails 11 is such that when one of the leaves is raised up, as shown with reference to the left-hand leaf in Fig. 1, the plates 17 will have been moved so that the pins 20 will lie in the offset portions 19 of the slots 18, thus supporting the plates 17, and consequently the leaf 9, to which they are attached, in the position referred to.

The leaves 10 are carried on an extension-frame composed of two longitudinally-sliding bars 21, rigidly joined at their outer ends by an end plate 22 and at their inner ends by a cross-bar 23. Fixed to the outer portion of each leaf 10 and on the under face thereof are two blocks 24, to which bars 25 are respectively pivoted. Each bar 25 is pivoted at its center to a bar 26. Each bar 26 is pivoted at its outer end to the respective bar 21. Each bar 21 carries adjacent to the inner end of each bar 25 a block 27, having a groove 28 therein, which forms a passage. These passages formed by the grooves 28 respectively receive the free ends of the bars 25. Each bar 25 has a plate 29, forming a spur adapted to engage with a dog 30, fixed, respectively, to the blocks 27 and located within the grooves 28 thereof. When the portions of the bars 25 and 26 are moved on their pivot so as to occupy the positions shown in Fig. 4 and at the right of Fig. 1, the plates 29 may be respectively engaged with the dogs 30, whereupon the bars 25 and 26 will be held in the extended position and the leaf 10, to which said extended bars are connected, will be supported, as shown. When it is desired that the leaves be lowered, the bars 25 are slightly raised to disengage the plates 29 and dogs 30, whereupon the bars may be folded to the position shown at the left in Fig. 1 and in Fig. 3. Each bar 21 is provided at its outer face and near its lower portion with a groove 31. The

grooves 31 respectively receive rails 32, fixed to the lower inner faces of the respective plates 7 and running horizontally, so as to form guides whereon the bars 21 may slide. By these means the leaves 10 are mounted on the sliding bars 21, which may be moved in and out from beneath the stationary top 6. The bars 21 slide in a plane beneath the plane in which the bars 11 slide, so that when the table is folded the leaves 9 and 10 will lie in two superposed layers. If desired, the extension-frames may be run out so as to employ both leaves 9 and both leaves 10 or so as to employ only one of each. The extension-frames are operative independently, so that one may be idle and the other active. Also, the corrugations 8 of the plates 7 are so disposed that when the rails or bars 11 and 21 are run in and when the leaves 9 and 10 are in their folded positions the leaves will run through the respective corrugations 8.

The plates 7 are braced transversely by two cross-bars 33, running between them. The end plate 12 and the end plate 22 each carry blocks 34. The blocks 34 project inwardly from the plates 12 and 22 and are internally folded to receive the folded upper portions of the respective legs 35. Each extension-frame is therefore provided with two legs, which are removable, if desired. The legs are shown in their two positions, respectively, by full and dotted lines in Fig. 1 of the drawings.

In order to hold the leaves 9 and 10 in rigid connection with the stationary top 6 when the leaves are in use, I provide the inner end 7 of each leaf 9 and 10 with a fastening device 36. These fastening devices are adapted to coact with two fastening devices 37, respectively carried by the outer end edges of the stationary top 6. When one leaf 9 and one leaf 10 are in use, as shown in Fig. 1, the fastening devices 36 of each of said used leaves are respectively engaged with the fastening devices 37. This holds the extension-frames from further outward movement and forms a rigid structure of the table. When both leaves 9 and both leaves 10 are in use, the inner leaf 9 and the inner leaf 10 have their fastening devices 36 respectively engaged with the fastening devices 37, which also holds the extension-frames from further outward movement and makes a rigid structure of the table.

In the construction shown in Figs. 6 and 7 the end boards 12 and 22 of the table are each provided at their ends with plates 40. Adjacent to the inner face of each plate 40 is a spring-controlled roller 41, on which flexible curtains 42 are respectively wound. The free ends of the curtains are respectively attached to the four corners of the stationary portion of the table. When one end of the table is contracted, as shown to the left of Fig. 6, the curtains at such end are automatically wound up on the rollers 41. When one end of the table is extended, as shown at the right of Fig. 6 and in Fig. 7, the curtains are rewound to fill the space otherwise left between the stationary portion and the end boards. The curtains 42 may be of any desired construction.

The purpose of providing the plates 17 at one end of the table and the bars 26 and 25 at the other end is to adapt the leaves 9 and 10 to the different heights which they have to be raised. The leaves 9 are higher than the leaves 10 and may be readily raised by the plates 17, but the leaves 10 require the peculiar movement of the bars or levers 26 and 25 to raise them the necessary space. There is therefore a coaction between the several devices.

Having thus described my invention, I claim as new and desire to secure by Letters Patent—

1. The combination of a support, two bars pivoted thereon, a block carried by each support and having a dog, a table-leaf, and two additional bars pivoted to the table-leaf, the additional bars being respectively pivoted to the first-named bars and having their free ends capable of respectively engaging the dogs on the blocks, substantially as described.

2. The combination of a support, a dog carried by the support, a bar pivoted to the support, a table-leaf, and a second bar pivoted to the table-leaf and pivoted to the first-named bar, the said second bar being capable of engaging the dog on the support, substantially as described.

3. In an extension-table, the combination of a stationary section having two guideways, two pairs of sliding bars or rails respectively running in the guideways, a table-leaf for each pair of sliding bars or rails, two bars pivoted to each other and respectively pivoted to one table-leaf and to one pair of sliding bars or rails, whereby said table-leaf may be held in the upper or lower position, a second table-leaf, and a diagonally-slotted plate carried by the second table-leaf and engaging a projection on the second pair of sliding bars or rails, substantially as described.

4. An extension-table having a stationary section with a top, and with two side plates projecting downwardly therefrom, each side plate having two horizontal corrugations, the corrugations having two horizontal guideways, two bars secured to the inner face of each side plate and respectively below the corrugations therein, a sliding rail rested on each bar, the rails being arranged in two horizontally-alined pairs, the members of each pair of rails being rigidly joined with each other, an extension-leaf carried by each pair of sliding rails, and means in connection with each extension-leaf, by which they may be raised or lowered according to the position of the sliding rails, substantially as described.

5. An extension-table having a main portion, an extension-section movable on the main portion, a curtain attached to the main

portion and extension-section, and a spring-pressed roll on which the curtain is wound, the roll winding the curtain as the extension-section of the table moves into the main portion, and the curtain closing the space between the two sections when the sections are extended.

6. An extension-table having a main portion with a rigid unbroken top, two pairs of rails or bars slidably held by the main portion and beneath the top, the said pairs of bars respectively moving in guideways one above the other, extension-leaves respectively carried on the pairs of rails or bars, and means for mounting said extension-leaves whereby they may be raised and lowered on the said bars or rails so as to lie level with the top of the main portion of the table or below the plane of said top.

CHRIS N. SMITH.

Witnesses:
GEORGE F. SILLS,
GEO. B. WILEY.