June 20, 1950 J. A. ADELL 2,512,514

MEASURING DEVICE

Filed July 19, 1946

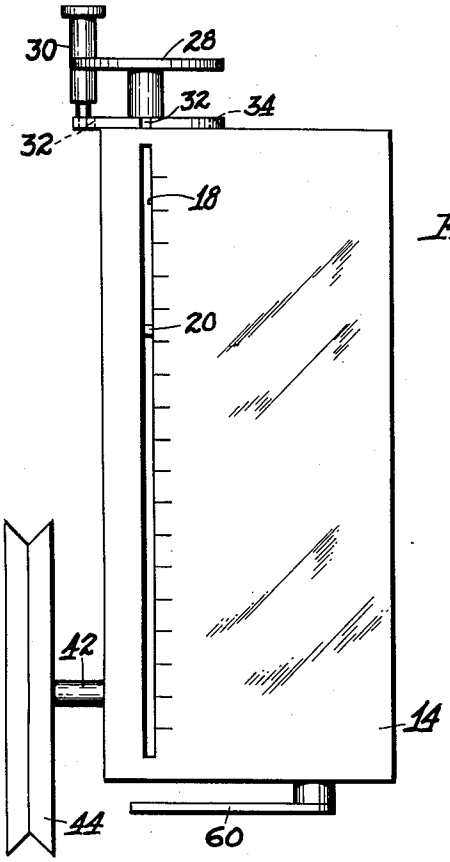

Fig. 1.

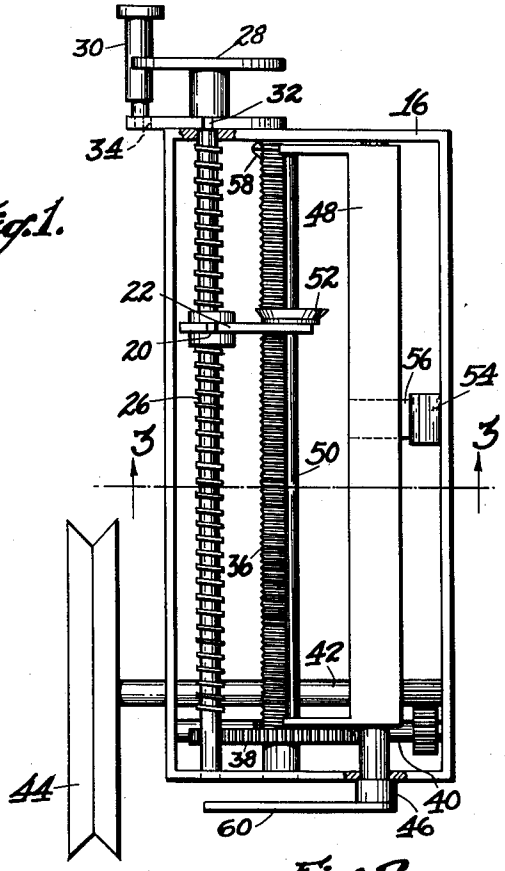

Fig. 2.

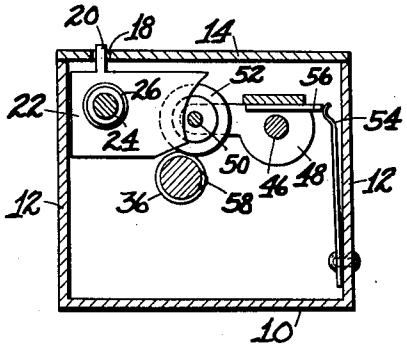

Fig. 3.

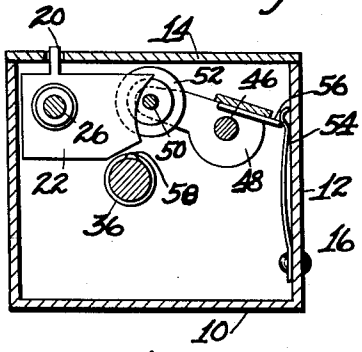

Fig. 4.

INVENTOR.
John A. Adell
BY
Charles R. Fay,
Attorney

Patented June 20, 1950 2,512,514

UNITED STATES PATENT OFFICE

2,512,514

MEASURING DEVICE

John A. Adell, Orange, Mass.

Application July 19, 1946, Serial No. 684,663

9 Claims. (Cl. 74—424.8)

1

This invention relates to new and improved devices for automatically measuring lengths of material, such as thread and yarn.

Objects of the invention include the provision of a device having an element driven by the material to be measured as it travels, said element being connected to a settable device to travel the latter to a zero or knockoff point, whereupon the material travel is stopped at the point desired depending on the original setting; the provision of a device of the class described comprising a thread or yarn driven wheel, in turn driving means for moving a device from a predetermined set position to a knockoff point so as to stop the thread or yarn travel; and the provision of a movable means for stopping thread or yarn travel, said means being set where desired for different lengths of thread or yarn and being automatically stopped at a zero or knockoff point so as to stop the travel of the material.

Further objects of the invention include the provision of a thread or yarn measuring device comprising a driven wheel in turn driving a threaded shaft, a movable wheel for selective engagement with the threads of the shaft so that as the shaft is turned, the movable wheel is moved longitudinally thereof from any set position along the length of the shaft, said shaft including a thread winder knockoff device for lifting the movable wheel from engagement therefrom and including a setting shaft for setting the wheel in a desired position according to the length of thread or yarn desired.

Other objects and advantages of the invention will appear hereinafter.

Reference is to be had to the accompanying drawings, in which

Fig. 1 is a view in front elevation of a device embodying the invention,

Fig. 2 is a view in front elevation with the cover or top plate removed,

Fig. 3 is a section on line 3—3 of Fig. 2 showing the wheel in engagement with the registering screw shaft, and

Fig. 4 is a view similar to Fig. 3 but showing the device in knockoff position.

In the form of the invention shown in the drawings, the same comprises a casing or housing having a bottom 10, side walls 12, and a removable top or cover plate 14, the housing being closed by end walls 16. The top or cover plate 14 is provided with a longitudinal slot as shown at 18 to accommodate an indicator element 20 which is located on a blade 22 fixed to a nut 24 in mesh with a screw threaded setting shaft 26, the latter being journalled in the end walls 16 as shown in Fig. 2.

Shaft 26 extends outwardly through one of the end walls 16 and is provided with a setting wheel 28 on which is mounted a spring-pressed

2

plunger 30 rotatable therewith and engageable in a series of slots 32 in a fixed plate 34 on the housing of the device. It will be clear that by retracting the plunger 30, the hand wheel 28 may be rotated so as to rotate shaft 26 and the rotation of this shaft will set the blade 22 longitudinally thereof, the blade being held against rotation due to its proximity to one of the side walls 12, see Fig. 3.

A screw threaded registering shaft 36 is journalled in the end walls 16 and is adapted to be driven as by a worm wheel 38 and a worm, not shown, on a shaft 40, shaft 40 being in turn driven by a shaft 42 to one end of which is secured a measuring wheel 44, the latter having a quarter or third yard periphery as desired. Setting screw 26 and registering screw 36 are provided with a definite predetermined difference in the number of threads per inch, and one practical relation is to provide the setting screw with ten threads per inch and the registering screw with forty threads per inch so that the setting blade 22 may be travelled rapidly to vary the setting desired.

A rod 46 is journalled in end wall 16 and has fixed thereto a long bracket 48 having a pair of arms at the ends thereof mounting a small rod 50. Slidably mounted on rod 50 there is a wheel 52 having a sharp periphery and designed for engagement with the threads of the registering shaft 36 so that as the latter is rotated, the wheel 52 will be travelled along the registering screw 36. To hold the wheel in engagement with the screw there is provided a snap spring 54 bearing on a short piece 56 secured to bracket 48, see Fig. 3, and as shown in Fig. 4, this spring will also hold wheel 52 and bracket 48 out of engagement with the registering screw 36.

At one end of the registering screw 36 there is provided a grooved enlargement or bump as at 58, this groove being a continuation of the screw threads thereof and causing the wheel 52 to rise at the end of the travel thereof so that the short piece 56 snaps under the angle of spring 54 to be held in the Fig. 4 position until manually returned to engagement with the screw.

Rod 46 has secured thereto an arm 60 exteriorly of the housing and this arm is connected to the yarn or thread traveler to turn the same on and off. When rod 46 is in the Fig. 4 position the traveler is off and when in the Fig. 3 position the traveler will be on to feed or travel the yarn or thread.

Top plate 14 may be calibrated into any units desired and it has been found that with the device as disclosed, any yardage can be measured from a few yards to over twenty thousand yards depending on the setting of the blade 22 by the wheel 28. The slots 32 in cooperation with the plunger 30 holds the setting shaft 26 in any posi-

tion desired and depending on the number of slots **32**, the minimum amount of yardage may be varied. In the particular example of the invention herein disclosed 2½ revolutions of wheel **28** will measure a thousand yards, but this can, of course, be varied without departing from the scope of the invention.

The entire device is intended to be mounted at an angle to the horizontal so that wheel **52** will rest by gravity against blade **22** when the rod **46** is tilted up in the "off" position of Fig. 4, and as blade **22** is travelled down the screw shaft **26**, wheel **52** follows. Clearly, the farther wheel **52** must travel to reach the bump **58**, the more yardage is measured.

Having thus described my invention and the advantages thereof, I do not wish to be limited to the details herein disclosed, otherwise than is set forth in the claims, but what I claim is:

1. A measuring device comprising a registering screw, means to drive the screw, a wheel having selective movement to engaged and disengaged condition relative to the screw, so that the latter travels the wheel longitudinally thereof when engaged, means on the registering screw to disengage the wheel therefrom at a predetermined point in its travel, and means to set the wheel at any desired point along the length of the registering screw, said means to set the wheel comprising a screw shaft and a blade traveled by the screw shaft, said wheel engaging the blade when disengaged from the registering screw.

2. A knockoff device or the like comprising a movable elongated bracket, a wheel on and movable along the bracket, means to move the wheel, a member on said means to lift the wheel therefrom at a predetermined point in the travel of the wheel, so that the bracket is moved thereby, and knockoff means on the bracket.

3. A knockoff and measuring device comprising a registering screw, a wheel having selective positions in "on" condition in engagement with the threads of the screw and in "off" condition out of such engagement, said wheel being translated along the screw by the rotation of the latter, means to knock the wheel from the screw at a predetermined point in the travel thereof and knockoff means moved by the wheel, a setting screw and a blade traveled thereby, the wheel engaging the blade in screw disengaged condition.

4. A device of the class described comprising a screw shaft, means to rotate the shaft, an elongated shiftable bracket, a disk on and translatable along the bracket, the latter having a position wherein the disk engages in the threads of the shaft and a second position wherein the disk is free thereof, means holding the bracket in either position, and a hump on the shaft to engage the disk and shift the bracket from the first named position to the second position.

5. A device of the class described comprising a screw shaft, means to rotate the shaft, an elongated shiftable bracket, a disk on and translatable along the bracket, the latter having a position wherein the disk engages in the threads of the shaft and a second position wherein the disk is free thereof, means holding the bracket in either position, a hump on the shaft to engage the disk and shift the bracket from the first named position to the second position, a second screw shaft of greater pitch, a plate thereon, manual means to rotate the second shaft, the plate being in a position to engage the disk and rapidly translate the same when out of engagement with the first named screw shaft.

6. A device of the class described comprising a screw shaft, means to rotate the shaft, an elongated shiftable bracket, a disk on and translatable along the bracket, the latter having a position wherein the disk engages in the threads of the shaft and a second position wherein the disk is free thereof, means holding the bracket in either position, a hump on the shaft to engage the disk and shift the bracket from the first named position to the second position, a second screw shaft of greater pitch, a plate thereon, manual means to rotate the second shaft, the plate being in a position to engage the disk and rapidly translate the same when out of engagement with the first named screw shaft, an indicating pointer on the plate, and a scale therefor to indicate the set position of the disk relative to the ends of the first named screw.

7. A device of the class described comprising a pair of screw shafts of different pitch, mechanical means to rotate the shaft of greater pitch and manual means to rotate the shaft of lesser pitch, a plate engaged with the latter shaft for movement therewith, the plate extending adjacent to the other shaft, a long rod parallel to the shaft of greater pitch, a disk on the rod for sliding movement thereon, a pivotable bracket supporting the rod in a pivotable manner about an axis parallel to the rod but offset therefrom, the disk being in the path of the plate all times and engaged at the periphery thereof with the threads of greater pitch in one position of the rod and bracket and disengaged therefrom in another position of the rod and bracket so the plate can rapidly traverse the disk in one direction when the latter is thus disengaged, spring snap means to hold the bracket in either position, and means to shift the bracket at a predetermined point in the travel of the disk.

8. The device of claim 7 wherein the last named means is a bump on the shaft of greater pitch at an end thereof, the disk being located normally and traveling from the plate as manually set to the bump.

9. A knockoff and measuring device comprising a registering screw, a wheel having selective positions in "on" condition in engagement with the threads of the screws and in "off" condition out of such engagement, said wheel being translated along the screw by the rotation of the latter, means to knock the wheel from the screw at a predetermined point in the travel thereof and knockoff means moved by the wheel, a setting screw, means to rotate said screw to different predetermined degrees, and means traveled by the setting screw to set the wheel.

JOHN A. ADELL.

REFERENCES CITED

The following references are of record in the file of this patent:

UNITED STATES PATENTS

Number	Name	Date
912,176	Ryan	Feb. 9, 1909
1,747,734	Peterson	Feb. 18, 1930
1,918,587	Bryant	July 18, 1933
2,166,852	Weiss	July 18, 1939

FOREIGN PATENTS

Number	Country	Date
106,285	Switzerland	Aug. 16, 1924