W. J. KENNEY & H. P. GROHN.
AUTOMATIC STOKING APPARATUS.
APPLICATION FILED JAN. 29, 1912.

1,211,591.

Patented Jan. 9, 1917.

4 SHEETS—SHEET 1.

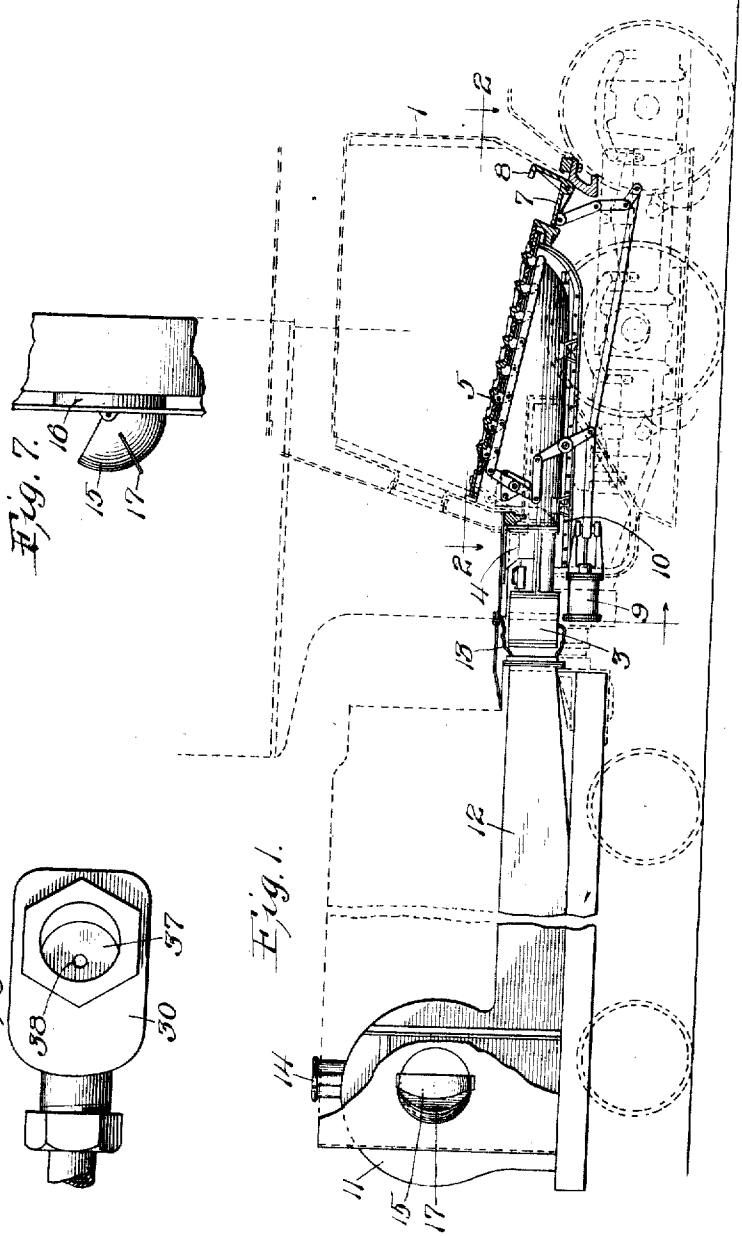


Fig. 1.




Fig. 7.




Fig. 5.

Witnesses:
Harry S. Gaither
Ruby V. Bydges

Inventor:
William J. Kenney and
Henry P. Grohn
by Chamberlin Frenderreich
Atty.

W. J. KENNEY & H. P. GROHN.
AUTOMATIC STOKING APPARATUS.
APPLICATION FILED JAN. 29, 1912.

1,211,591.

Patented Jan. 9, 1917.
4 SHEETS—SHEET 2.

Fig. 2.

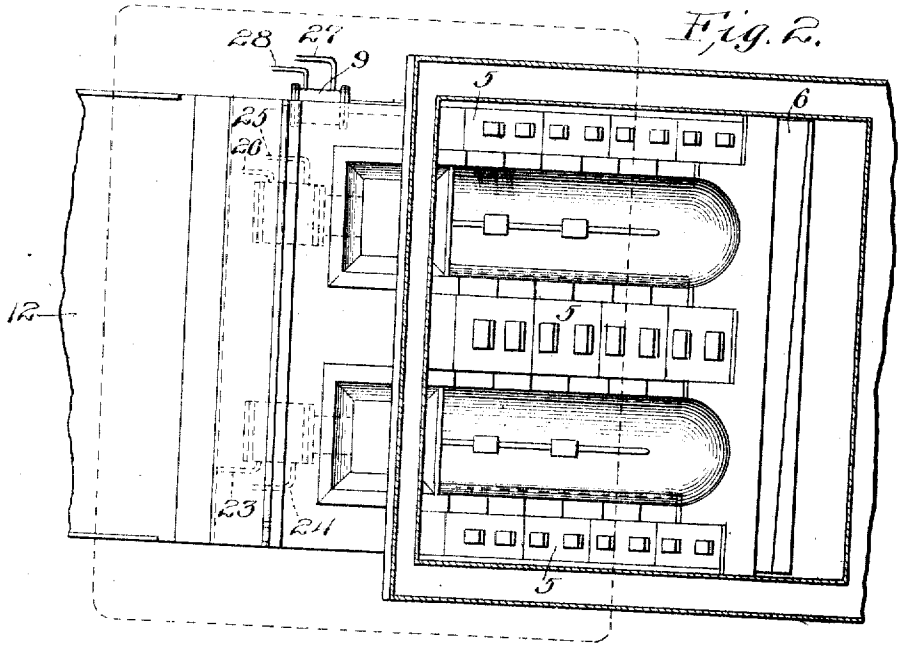


Fig. 6.

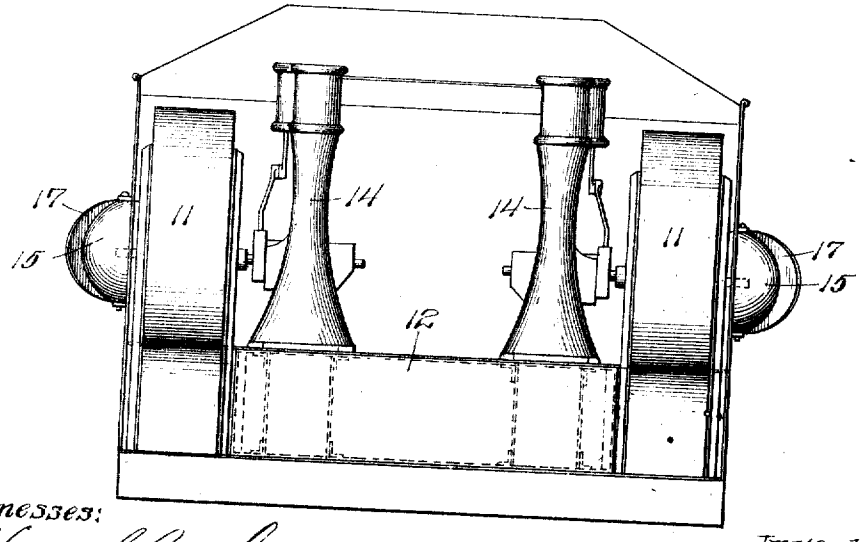


Witnesses:
Harry S. Gaither
Ruby V. Brydges

Inventor
William J. Kenney &
Henry P. Grohn,
by Chamberlin & Prendergast,
Attys.

W. J. KENNEY & H. P. GROHN.
AUTOMATIC STOKING APPARATUS.
APPLICATION FILED JAN. 29, 1912.

1,211,591.

Patented Jan. 9, 1917.
4 SHEETS—SHEET 3.

Fig. 3.

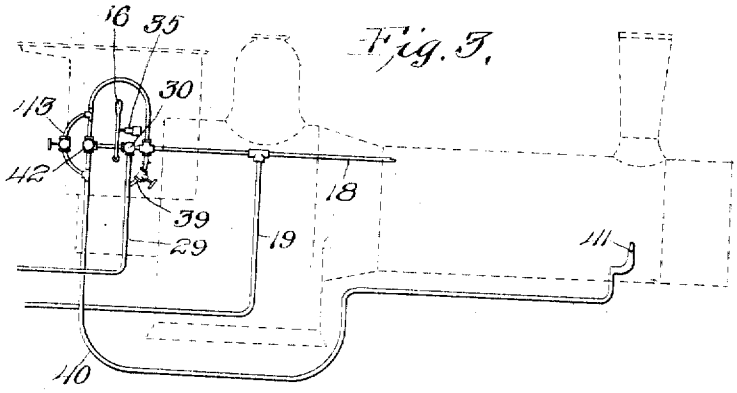


Fig. 4.

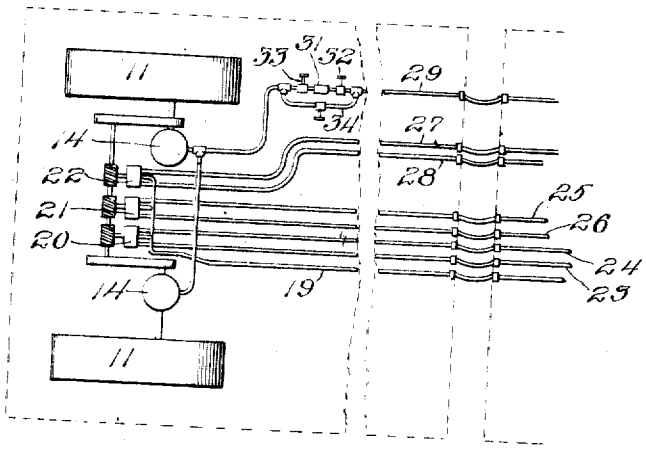


Witnesses:
Harry S. Guither
Ruby V. Brydges

By

Inventor:
William J. Kenney and
Henry P. Grohn
Chamberlin & Freudenreich,
Att'ys.

W. J. KENNEY & H. P. GROHN.

AUTOMATIC STOKING APPARATUS.

APPLICATION FILED JAN. 29, 1912.

**1,211,591.**

Patented Jan. 9, 1917.

4 SHEETS—SHEET 4.

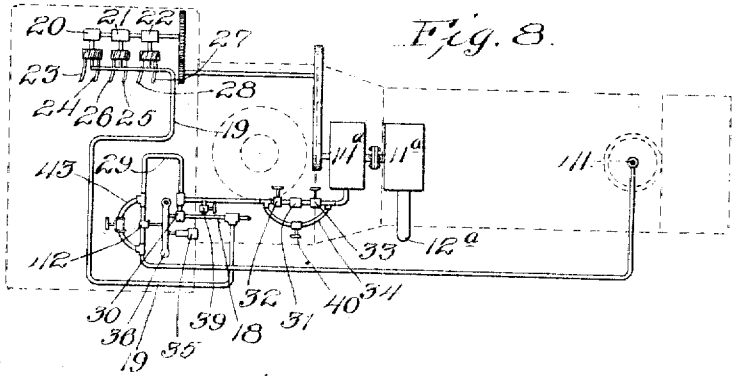


Fig. 8.

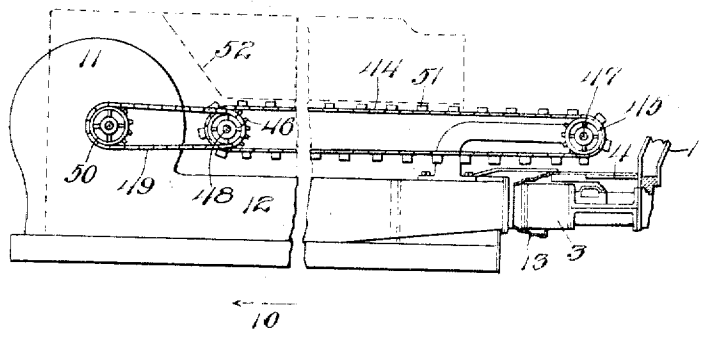


Fig. 9.

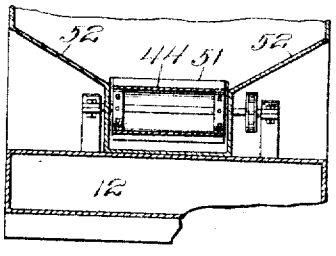


Fig. 10.

Witnesses:
Harry S. Gaither
Ruby V. Brydges

by

Inventor:
William J. Kenney
Henry P. Grohn
Chamberlin & Prendergast
Attys.

# UNITED STATES PATENT OFFICE.

WILLIAM J. KENNEY, OF WILMETTE, AND HENRY P. GROHN, OF CHICAGO, ILLINOIS, ASSIGNORS TO UNDERFEED STOKER COMPANY OF AMERICA, OF CHICAGO, ILLINOIS, A CORPORATION OF NEW JERSEY.

## AUTOMATIC STOKING APPARATUS.

1,211,591. Specification of Letters Patent. Patented Jan. 9, 1917.

Original application filed October 12, 1908, Serial No. 457,199. Divided and this application filed January 29, 1912. Serial No. 673,993.

*To all whom it may concern:*

Be it known that we, WILLIAM J. KENNEY and HENRY P. GROHN, citizens of the United States, residing, respectively, at Wilmette and Chicago, county of Cook, State of Illinois, have invented a certain new and useful Improvement in Automatic Stoking Apparatus, and declare the following to be a full, clear, and exact description of the same, such as will enable others skilled in the art to which it pertains to make and use the same, reference being had to the accompanying drawings, which form a part of this specification.

Our invention relates particularly to automatic stoking apparatus for locomotives and has for its object better to adapt such mechanism to use in connection with locomotives than has heretofore been possible.

The various features of novelty whereby our invention is characterized will hereinafter be pointed out with particularity in the claims; but, for a full understanding of our invention and of its object and advantages, reference may be had to the following detailed description taken in connection with the accompanying drawings, wherein:

Figure 1 is a view partly in side elevation and partly in section of a preferred form of apparatus applied to a locomotive, portions of the locomotive and its tender being indicated in dotted lines; Fig. 2 is a section taken through the fire box of a locomotive just above the stoking mechanism, showing the stoking mechanism in plan; Fig. 3 is a diagram of the piping used to effect the automatic control of the blower and stoker mechanism from a throttle valve of the locomotive; Fig. 4 is a diagrammatic plan view of the piping used to connect the several operating cylinders with the mechanism shown in Fig. 3 and with the controlling mechanism operated by the blower; Fig. 5 is a detail of one of the valves shown in Fig. 3; Fig. 6 is an end view of the tender, showing the blowers and the engines for driving them; Fig. 7 is a top plan view of the automatically adjustable intake device for one of the blowers; Fig. 8 is a diagrammatic view of a modified arrangement embodying the piping and controlling mechanism; Fig. 9 is a side view of mechanism carried by the tender for conveying fuel to the feed mechanism of the stokers; and Fig. 10 is a section taken on line 10—10 of Fig. 9.

Referring to the first seven figures of the drawings, 1 represents the fire box of a locomotive in which are placed two retorts 2. At the back end of each retort is a ram 3 by which fuel placed into the hopper 4 is fed into the retort.

The mechanism for delivering the fuel into the fire box and for disposing of the clinker and ash may take any usual or preferred forms since our invention is not limited to any particular type of mechanism for this purpose. In the drawings we have illustrated the underfeed stoker described and claimed in our application Serial No. 457,199 of which the present application is a division. Briefly stated this construction is as follows: Between the two retorts and between each of the retorts and the adjacent side wall of the fire box is a mechanism 5 for receiving clinker and ash from the retorts and moving it forwardly toward a discharge outlet 6 at the front end of the fire box. The discharge outlet is controlled by an oscillatory member comprising a shelf 7 and a cutting or breaking member 8 arranged at right angles to each other and extending across the outlet. The clinkers and ashes are fed forwardly upon the shelf 7 and, when the shelf is dropped the portions of clinker and ash hanging over the front end of the outlet are cut or broken away and forced down into the ash box. The members 5 and the ejector are operated from a piston mounted in a suitable cylinder 9 and connected to the members 5 and the ejector by suitable links and levers. The retorts are arranged within a closed air chamber 10 into which air is forced and from which it passes up through suitable outlets or twyer blocks in the retorts.

In the rear end of the locomotive tender are arranged two blowers 11, one near each side of the tender. The intake for the blowers is through the sides of the tender and the discharge is through a common flue 12 extending along the bottom of the tender to the front end thereof where it is coupled to

the air chamber by a suitable flexible connection 13. Each blower may be driven by its own engine 14 arranged at the side thereof.

To facilitate the admission of air to the blowers, hoods 15 are movably mounted adjacent to the intakes of the blowers. These hoods preferably take the form of a sector of a spherical shell, the sector being less than a hemisphere and the diameter being the same as the diameter of the intakes 16. The hoods are mounted so as to be revoluble about vertical axes which intersect the axes of the intake openings. Each sector is provided with a wing 17 extending therefrom radially relative to the axis of rotation. When the locomotive begins to move, the air strikes the wings and turns the hoods so as to afford mouths for the intakes open in the direction of travel. Upon reversing the locomotive, the air, striking the wings, reverses the hoods and again brings the mouths of the intakes facing in the direction of travel.

It is our intention to supply steam directly from the locomotive boiler to the blower engines, the rams, and the cylinder for moving the clinkers and ashes, suitable controlling mechanism being provided to give reliable and efficient operation under all conditions. The piping and controlling devices for the steam are best shown in Figs. 2, 3 and 4. Referring to these figures, 18 represents a pipe leading from any suitable point of a locomotive boiler and adapted to supply the requisite steam to the stoker mechanism. From this pipe extends a branch 19 which is continued back through the tender to a point adjacent to the blower mechanism where it is connected to three automatic valve devices, 20, 21 and 22 suitably operated from one or both of the blower engines. These valve devices may be similar to those described and claimed in Patent No. 782,269 and therefore no detailed description thereof is here given. From the valve device 20 extend two pipes 23 and 24 which lead to the two ends of one of the ram cylinders. Similarly pipes 25 and 26 lead from the valve device 21 to the two ends of the other ram cylinder, and pipes 27 and 28 lead from the valve device 22 to the opposite ends of the cylinder 9. Thus whenever the blower engines are operated steam at boiler pressure will be admitted alternately at opposite ends of the ram cylinders and of the cylinder 9 so as to reciprocate the pistons in these cylinders, the rate of reciprocation depending upon the adjustment of the valve devices 20 to 22. Steam is supplied to the blower engines through a pipe 29 which is connected to the supply pipe 18 by means of a valve 30. The pipe 29, like the pipe 19, extends back through the tender and is there connected to both of the blower engines. In the pipe 29 may be placed a suitable regulator 31 for the purpose of regulating the supply of steam to the blower engines. Thus when the boiler pressure is high the demand upon the stoking mechanism is only such as to maintain the pressure and is less than at times when the boiler pressure not only must be maintained but must be increased. The regulator controls the steam to the blower engines so as to make them meet the demand upon the stoking mechanism. We have not illustrated the regulator in detail since it is a common device which, as illustrated in Patent 782269, has heretofore been used for governing the blower engines of automatic stokers. Further control over the steam supply of the blower engines may be had by means of manually operated valves 32 and 33 arranged on opposite sides of the regulating valve and by means of a valved by-pass 34 extending around the regulator valve. The main controlling valve 30 for the steam supply to the blower engines is preferably located near the throttle valve 35 of the engine and is operated by the lever 36 of the throttle valve so that when the throttle valve is closed the valve 30 is also closed, since the demand upon the stoking mechanism ceases or is at least greatly reduced when the throttle valve of the locomotive is closed. We do not, however, desire to have a complete cessation of the stoking operation whenever the throttle valve of the locomotive is closed and therefore we prefer so to construct the valve 30 that when it is closed it will still allow sufficient steam to pass to permit the blower engines to run at a speed great enough to keep the fires from dying down below the point necessary to maintain the required steam pressure. This may conveniently be accomplished by providing the gate 37 of the valve 30 with a small port 38, as indicated in Fig. 5 so as to permit the requisite amount of steam to pass through the valve when closed. We also place a valved by-pass 39 around the valve 30 so that steam may be admitted from the supply pipe to the pipe 29 at any time without passing through the valve 30.

When the locomotive is running there is considerable draft through the stack by reason of the exhaust steam which is discharged through the stack, this draft being of course a factor in the normal operation of the stoker. When the engine stops running, or whenever the throttle valve is closed, whether the engine is running or not, this draft through the stack is no longer present and this may often be a disadvantage. To overcome the disadvantage of lack of draft through the stack when there is no steam being exhausted from the locomotive through the stack, we have provided means for discharging steam through

the stack at any time so as to produce the effect of the steam exhausted by the locomotive engine. In the arrangement shown, we have provided a pipe 40 which extends from the supply pipe 18 to a suitable exhaust nozzle 41 in or directly below the stack of the locomotive. The pipe 40 is provided with a valve 42 which is placed adjacent to the throttle valve of the locomotive so as to be capable of being operated by the throttle valve. In the preferred arrangement, the parts are so arranged that when the throttle valve is closed the valve 42 is opened. In other words, whenever the normal exhaust of steam through the stack is stopped, an auxiliary exhaust is set up so that there will always be sufficient draft to give the best results. We prefer to provide a valved by-pass 43 around the valve 42 so that steam may be discharged through the nozzle 41 at any time, by opening the valve in the by-pass, independently of the main valve 42. By this means the nozzle 41 may be brought into play not only when the locomotive is standing idle or when the throttle valve is closed, but also when the engine is running and it is desired to assist the ordinary draft.

In Fig. 8 we have illustrated a modification in which the blower and its engine, the regulator and the automatic controlling valves are all carried directly upon the locomotive. In this figure $11^a$ and $14^a$ are respectively the blower and its engine and $12^a$ is the conduit leading from the blower to the air chamber beneath the retorts. The piping is the same except that the pipes 19 and 29 do not extend back into the tender.

In Figs. 9 and 10 we have illustrated power actuated means for conveying the fuel from the tender into the hoppers of the stokers. The arrangement consists of an endless belt 44 supported upon sprocket wheels 45 and 46, the first of which is located just in rear of the hoppers and the other in the back portion of the tender. The sprocket wheels are suitably supported upon horizontal revoluble shafts 47 and 48, respectively. The shaft 48 may be driven by a chain 49 passing over a sprocket wheel 50 on one of the engine shafts. The conveyer belt may be provided with cleats 51 to give it a firmer hold upon the fuel. As shown in Fig. 10, the floor of the tender is preferably inclined downwardly from each side toward the conveyer as indicated at 52, in order that the fuel will roll by gravity from the sides of the tender upon the conveyer, thus eliminating the necessity for shoveling or raking any of the fuel upon the conveyer. When the blower engines are in operation the conveyer belt is driven slowly so as to carry the overlying fuel progressively toward the front and there discharge it into the hoppers from which it is in turn delivered into the retorts by means of the rams.

For the sake of brevity we have illustrated and described in detail only a single preferred embodiment of our invention with a slight modification thereof; but we desire to have it understood that we are not limited to the specific structural details or arrangements so illustrated and described. Thus, for example, the type of stoker, the number of retorts, the number, arrangement and location of the blowers may be varied at will.

We claim:

1. In combination with a locomotive, a furnace, an automatic steam-actuated stoker mechanism for delivering fuel to the furnace, a steam supply pipe for said stoker mechanism, a valve in said supply pipe, a locomotive throttle valve, a common actuating means for the aforesaid valves, and a valved by-pass around the valve in said supply pipe.

2. In combination with a locomotive, an automatic stoker, and means for automatically causing the operation of the stoker when the locomotive engine is operated and for reducing the rate of operation of the stoker without entirely stopping it when the locomotive engine is stopped.

3. In combination with a locomotive, a furnace, an automatic stoker in the furnace for delivering fuel thereto, a throttle valve for the locomotive engine, and means independent of the locomotive engine for controlling the operation of the stoker by the operation of the throttle valve.

4. In combination with a locomotive, a furnace, an automatic stoker in the furnace for delivering fuel thereto, a throttle valve for the locomotive engine, and means controlled by the throttle valve and independent of the locomotive engine for varying the quantity of fuel delivered to the furnace as the speed of the engine is varied.

5. In combination with a locomotive, a furnace, an automatic stoker in the furnace for delivering fuel thereto, a throttle valve for the locomotive engine, and means for reducing the quantity of fuel delivered to the furnace and causing it to be supplied at a predetermined minimum rate when the engine is stopped by such throttle valve.

6. In combination with a locomotive, a furnace, an automatic stoker in the furnace for delivering fuel thereto, a throttle valve for the locomotive engine, means for automatically varying the quantity of fuel delivered to the furnace as the speed of the engine is varied, and means actuated by the throttle valve for controlling the amount of air supplied to the furnace.

7. In combination with a locomotive, a furnace, an automatic stoker in the furnace for delivering fuel thereto, an engine for

operating said stoker, and a common control for the locomotive engine and such stoker engine.

8. In combination with a locomotive, a furnace, an automatic stoker in the furnace for delivering fuel thereto, a throttle valve for the locomotive engine, a blower for supplying air under pressure to the furnace, means associated with the throttle valve for automatically varying the operation of the blower as the throttle valve is shifted, and means for increasing the draft of the locomotive by the closing of the throttle valve.

9. In combination, a boiler, an automatic stoker for heating the boiler, a valve for controlling the delivery of steam from the boiler, and means controlled by said valve for increasing the rate of operation of the stoker from and decreasing it to a predetermined minimum rate at which the stoker normally operates when no steam is being taken through said valve from the boiler.

10. In combination, a boiler, an automatic stoker for supplying heat to the boiler, a main valve for controlling the delivery of steam from the boiler, a valve for controlling the operation of the stoker, and connections between said valves constructed and arranged to cause the controlling valve for the stoker to remain open slightly when the main valve is closed and to be opened more widely as the main valve is opened.

11. In combination with a locomotive, an automatic stoker, means for automatically causing the operation of the stoker when the locomotive engine is operated, means for removing from the stoker the clinkers and ashes resulting from the combustion, and means for automatically causing the operation of the removing means when the locomotive engine is operated.

12. In combination with a locomotive, an automatic stoker, means for automatically causing a decrease in the rate of operation of the stoker to a predetermined minimum when the locomotive engine is stopped, means for removing from the stoker the clinkers and ashes resulting from the combustion, and means for automatically causing the operation of the removing means when the locomotive engine is operated.

In testimony whereof, we sign this specification in the presence of two witnesses.

WILLIAM J. KENNEY.
HENRY P. GROHN.

Witnesses:
MARGARET FALAHEE,
JEANNETTE SHIVELY.