July 8, 1952 J. E. BLAIR 2,602,321

METHOD OF CONSTRUCTING A PREFABRICATED BRIDGE STRUCTURE

Filed March 21, 1947

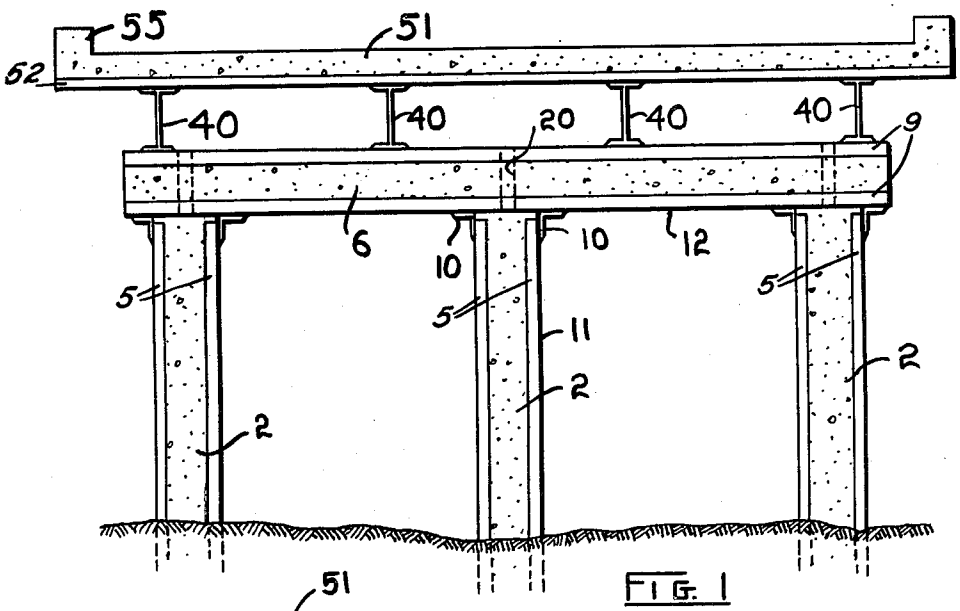

FIG. 1

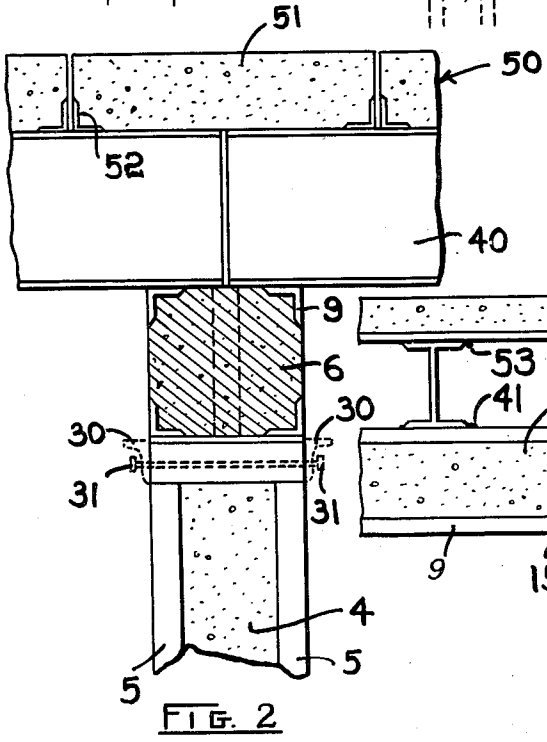

FIG. 2

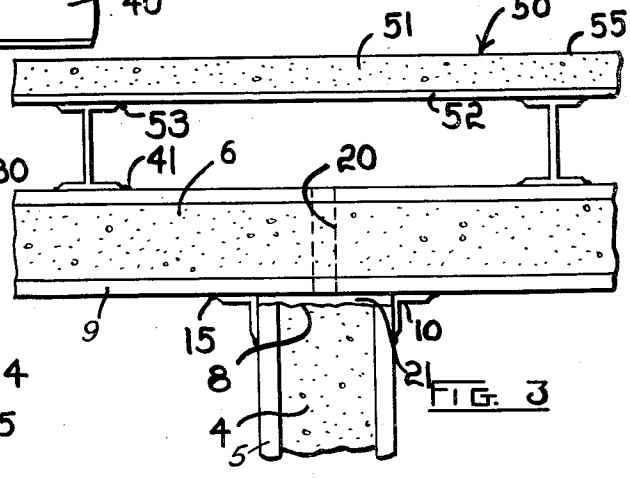

FIG. 3

JOHN E. BLAIR
INVENTOR.
Lester B. Clark
& Ray L. Smith
ATTORNEYS

BY

Patented July 8, 1952 2,602,321

UNITED STATES PATENT OFFICE

2,602,321

METHOD OF CONSTRUCTING A PREFABRICATED BRIDGE STRUCTURE

John E. Blair, Bryan, Tex.

Application March 21, 1947, Serial No. 736,311

1 Claim. (Cl. 72—8)

1

The invention relates to a supporting structure and particularly to the arrangement and assembly of a bridge.

Considerable difficulty has been encountered in constructing highway bridges of concrete unless the entire bridge, including the footing, is cast as a unitary structure. The difficulty arises in providing a connection between the piling, the caps therefor, and the supporting stringers for the bridge. This difficulty arises due to the fact that it is difficult to arrange a uniform level supporting structure for the bridge on top of the piling where concrete piling has been driven. With wooden piling and timbers, of course the wood can be cut and fitted, but such a procedure is impossible with concrete precast structures.

The present invention relates to a procedure which provides precast concrete piling in which metal attaching structures have been embedded in such a manner that certain parts thereof are exposed so that the cap for the piling may be affixed thereto after the piling has been cut off near the desired elevation, and the stringers for the bridge then affixed to the caps, and the procedure furthermore provides for an arrangement whereby a cement grout can be injected between the top of the piling and the cap therefor so as to insure a uniform supporting area.

It is one of the objects of the invention to provide concrete piling having metal attaching members embedded therein in such a manner that they are partly exposed so that means connecting the piling and caps may be welded thereto.

It is another object of the invention to provide concrete piling and a cap therefor in which angle irons or other structural members have been partially embedded so that they are also partially exposed in order that like members may be welded thereto so that the cap may be connected to such like members.

Another object of the invention is to provide a means and method whereby a precast concrete piling and cap construction may be affixed together by welding angle irons to metal strips which are embedded in the piling and then connecting the cap construction to the angle irons, and also a means and method which permits the injection of cement grout through openings in the cap so as to fill in above the uneven surface comprising the top of the piling.

Still another object of the invention is to provide an arrangement whereby a cement grout introduced through an opening in a precast concrete cap may be confined above the top of a supporting precast concrete piling and pressure maintained thereon while the grout is setting so

2

as to insure that the load will be evenly and uniformly distributed from the cap to the piling.

Other and further objects of the invention will be readily apparent when the following description is considered in connection with the accompanying drawings, wherein:

Fig. 1 is a transverse view of a bridge structure constructed in accordance with the invention and illustrating the cap, stringers and bridge floor as having been welded in position on top of the precast piling.

Fig. 2 is a broken detail view taken at right angles to the arrangement shown in Fig. 1 and illustrating how the floor is affixed to the stringers, the stringers to the cap, the cap to the piling, and how the cement grout is confined about the head of the piling.

Fig. 3 is a view similar to Fig. 1, showing in enlarged detail the space between the top of the piling and the cap before it is filled with grout.

In Fig. 1 several precast concrete piles 2 are shown as having been driven into position. It is of course impossible to drive all of the pilings which are to support the bridge structure into the earth at the same distance and also the top of each piling cannot be cut off exactly but only at approximately the same elevation as any other piling.

The particular piling here illustrated are seen in detail in Figures 2 and 3, where the body 4 of concrete has been faced along each corner with angle irons 5 or any other suitable structural steel members. These members 5 are used for attaching other portions of the bridge to the piling, for instance, such as the members 10 to which the cross-piece or cap 6 shown in the various figures of the drawing may be connected.

Fig. 3 shows the upper end 8 of the cement 4 of the piling as having been cut off rather unevenly in any suitable manner.

After the pilings have been driven and cut off, the next step is to then position the cap 6 across a number of the piling in order to form the base or foundation for the rest of the bridge. The cap 6, as seen in Fig. 2, also has angle irons 9 cast along its corners with the concrete so as to facilitate the attaching of the cap to the piling.

In Fig. 1 the attaching members 10 are in the form of angle iron pieces and have been positioned against the side 11 of the piling 2 and against the metallic corner pieces, as the angles 9, which extend along the base 12 of the cap 6. These angle irons are then welded to the angles 9 by the beads 15 of welding material as seen in Fig. 3.

These attaching members, welded to both the

piling and the cap, determine the position of the cap and as seen in Fig. 1 the cap extends transversely across the substantially horizontally extending surfaces of the angles 10 at the tops of the pilings and in substantially the same horizontal plane which plane can be termed a reference elevation above the concrete top of each piling.

It is not intended, however, that these attaching members 10 shall carry the load of the bridge and the traffic, and in order to transmit such weight from the bridge to the piling. Fig. 1 and Fig. 3 show in detail the arrangement for introducing a cement grout through openings such as 20 extending vertically through the cap and leading into the space 21 between the top of the piling and bottom 12.

Concrete grout will be forced under pressure through openings 20 into the space 21 so as to provide a supporting surface on the top of the piling. The angle irons 10 of course close the space 21 on two sides of the piling while the other two sides would normally remain open. In order therefore to close the two opposite sides of the space 21 and form a complete closure into which the cement grout 25 may be forced under pressure, the invention contemplates another pair of angle irons or other suitable members 30 which will be temporarily positioned as seen in Fig. 2 in dotted lines. These two members 30 can be suitably held in position by a through bolt 31. They are placed preferably at the same elevation as the angles 10 so that the two angles 10 and the two angles 30 form a complete enclosure. It is known of course that cement grout tends to shrink somewhat while setting and with this in view, it is intended that pressure may be applied to the grout through the opening 20 after it has been introduced. For instance this may be done by inserting an iron bar to which a load can be applied in order to hold the grout under pressure in the space 16.

After these operations have been performed, any load applied to the cap will be uniformly transmitted to the top of the piling.

The next step in the construction of the bridge would be the position of the longitudinal bridge stringers 40, a number of which are shown in Fig. 1. Such stringers are usually in the form of I or H beams and they will be arranged longitudinally of the bridge and crossing a number of the caps 6. The upper angle irons or attaching members 9 on the cap will receive and support these stringers 40 so that they may be welded thereto as seen in Fig. 3 by the beads 41 of the welding material.

The floor of the bridge indicated generally at 50 may also be made up of precast concrete slabs 51 which may have the same type of angle irons cast therewith in the form of the attaching members 52, particularly on the lower edges thereof. As these slabs 51 are positioned on the stringers 40, they may be welded in place by the beads 53 of the welding material as seen in Fig. 3. Fig. 1 shows these slabs 51 as being of substantial length, namely, the width of the bridge, and as having a guard curb portion 55 at the end so that when all of these guards 55 are taken together, they form an upstanding edge on the bridge.

The particular advantage of the present invention resides in the fact that all of the portions thereof may be prefabricated and the entire bridge can be assembled in a minimum of time with a minimum of expense.

In order to form a suitable supporting cap on the piling heretofore it has been necessary to build a form about the top of the piling which is usually up in the air a considerable distance from the ground so that the building of such forms causes considerable delay and expense.

Broadly the invention contemplates a bridge structure formed completely of precast and prefabricated parts which are assembled together and arranged in a monolithic type of construction.

What is claimed is:

A method of erecting a support structure comprising the steps of, driving into the earth precast concrete piles having exposed metal portions embedded therein, cutting off the piles at uneven distances below a reference elevation, attaching metal means to the metal portions at the tops of the piles to present substantially horizontally extending surfaces at substantially the reference elevation, disposing perforated, precast caps having exposed metal portions embedded therein to be supported by the piles with the cap metal portions bearing upon the substantially horizontally extending surfaces of the metal means and with the perforations of the cap disposed over the piles, connecting the cap metal portions and the metal means, completing the enclosure of the spaces at the tops of the piles and below the caps, inserting a grout material through the perforations to fill the spaces, and applying pressure to the grout to insure that a supporting grout surface is provided on the piles for the caps when the grout hardens.

JOHN E. BLAIR.

REFERENCES CITED

The following references are of record in the file of this patent:

UNITED STATES PATENTS

Number	Name	Date
916,378	Sunderland	Mar. 23, 1909
918,699	Ransome	Apr. 20, 1909
1,303,741	Thomas	May 13, 1919
1,472,603	Lally	Oct. 30, 1923
1,515,257	Krasnow	Nov. 11, 1924
2,050,935	Dresser	Aug. 11, 1936
2,287,210	Wellborn et al.	June 23, 1942

OTHER REFERENCES

Engineering News-Record, April 18, 1946, pages 82 and 83.