PATENT SPECIFICATION (11) 1 587 230

1 587 230

(21) Application No. 26269/77 (22) Filed 23 Jun. 1977

(31) Convention Application No. 761823

(32) Filed 23 Jun. 1976 in

(33) Finland (FI)

(44) Complete Specification Published 1 Apr. 1981

(51) INT. CL.³ E02D 5/30

(52) Index at Acceptance

F2M 201 242 262 263 272 B2

(19)



(54) IMPROVEMENTS IN OR RELATING TO CONNECTING ELEMENTS

(71) We, VELI MARTTI LAINE, of Takojantie 8 C 15, Espoo, Finland and MATTI LOUKOLA, of Ruorimiehentie 12, Helsinki, Finland, both Finnish citizens, do hereby declare the invention for which we pray that a patent may be granted to us, and the method by which it is to be performed, to be particularly described in and by the following statement:

The present invention relates to joints between construction elements.

It has been proposed to join construction elements, particularly concrete piles, by a joint able to resist bending moments. However, as a result of the varying stresses occurring during pile driving, which are very high compared with the static loading of the structure, difficulties have been encountered during piling work, even with joints already approved for use.

According to the present invention, there is provided a joint between two construction elements, said joint comprising a joining member extending from one of said elements, via a first opening in a first face of the other element, into a socket formed in said other element, a co-operating wedge and support member inserted into the socket through a second opening formed in a face of the other element transverse to the face such that the co-operating wedge and support member lie between the first face of the said other element and an abutment surface of the joining member, said wedge and support member having co-operating surfaces which are inclined to said first face of the other element, and means for tightening the wedge relative to the support member whereby the abutment surface is subjected to a force transversely to said first face in a direction to draw a face of the said one construction element into tight engagement with said first face of the other construction element.

Further according to the invention, there is provided a joint between two construction elements, said joint comprising a joining member extending from one of said elements, via a first opening in a first face of the other element, into a socket formed in said other element, a co-operating wedge member and support member inserted into the socket through a second opening formed in a face of the other element transverse to the first face such that the co-operating wedge member and support member lie between the first face of the said other element and an abutment surface of the joining member, said wedge member and support member having co-operating surfaces which are inclined to said first face of the other element, and screw-threaded means for tightening the wedge member relative to the support member whereby the abutment surface is subjected to a force transversely to said first face in a direction to draw a face of the said one construction element into tight engagement with said first face of the other construction element, said screw-threaded means being rotatably mounted on one of said members and threadedly engaged with the other of said members.

An embodiment of the invention will now be described, by way of example only, with reference to the accompanying diagrammatic drawings, in which:

Figure 1 is a cross-section of a joint between two concrete piles;

Figure 2 is a section taken on line II-II of Figure 1;

Figure 3 is a side elevation of the joint;

Figures 4 and 5 show a wedge of the joint;

Figure 6 shows a tightening member of the joint; and

Figures 7 and 8 show a supporting member of the joint.

With reference to Figures 1–3 a joint between two construction elements in the form of concrete piles 1 and 2, comprises joining members in the form of steel rods 3, 4 and 5 bent into a U-shape. The rods 4 and 5 form part of the pile 1 and the rod 3 forms part of the pile 2. The end of the rod 3 extends from the pile 2 and is engaged in a seat 6 in the pile 1. The seat 6 is a part of a socket 7 in the pile 1. The socket 7 is provided with two openings, one being in the end face of the pile 1 and the other on a side of the pile 1 adjacent to the end face.

Assembly is effected by bringing the piles 1 and 2 together in such a manner that the rod 3 enters the seat 6 in the socket 7 through the opening in the end face of the pile 1.

After that, a wedge 8, together with a supporting member 9 and a tightening member in the form of a threaded bolt 10, is pushed into the socket 7 through the opening at the side of the pile 1. The wedge 8, supporting member 9 and bolt 10 are shown in Figures 5–8 and lie within an aperture in the joining member 3, this aperture being defined by the space between the opposed limbs of the U-shaped rod which constitutes the member, the looped end portion of the rod forming an abutment surface engaged by the wedge 8, as shown in Figure 1.

The bolt 10 is rotatably mounted in a lug of the support member 9, so that the head of the bolt lies adjacent, and is accessible through, the opening in the side of the pile 1 to enable the bolt to be tightened. The bolt 10 is threadedly engaged with the wedge 8 and upon tightening the bolt 10, an inclined surface of the wedge 8 moves upwardly along a corresponding inclined surface of the support member 9.

The wedge 8 is in contact with the looped end portion of the rod 3, and the support member 9 is in contact with the looped end portions of the rods 4 and 5. Upon tightening of the bolt 10, the action of the wedge 8 riding up along the inclined surface of the support member 9 causes the rod 3 and the rods 4 and 5 to be pushed axially apart thereby forcing the adjacent end faces of the two piles into tight engagement.

The joint may consist of more than one wedge 8 and associated members 9 and 10.

The invention is not restricted to joints between concrete piles, but is applicable to joints between other kinds of construction elements, such as columns, beams, wall elements and slabs.

The assembly formed by the wedge and support member, when tightened, provides a pre-stress at the juncture between the construction elements and also serves to transmit forces between the elements. The seat and socket can readily be formed during casting of the element, using appropriate moulding inserts.

The joint particularly described does not require close dimensional tolerances of its component parts.

WHAT WE CLAIM IS:—

1. A joint between two construction elements, said joint comprising a joining member extending from one of said elements, via a first opening in a first face of the other element, into a socket formed in said other element, a co-operating wedge and support member inserted into the socket through a second opening formed in a face of the other element transverse to the first face such that the co-operating wedge and support member lie between the first face of the said other element and an abutment surface of the joining member, said wedge and support member having co-operating surfaces which are inclined to said first face of the other element, and means for tightening the wedge relative to the support member whereby the abutment surface is subjected to a force transversely to said first face in a direction to draw a face of the said one construction element into tight engagement with said first face of the other construction element.

2. A joint according to claim 1, wherein the tightening means comprises a threaded bolt mounted on the support member and the wedge, the head of the bolt being accessible through the second opening.

3. A joint according to claim 1 or claim 2, wherein the joining member includes an aperture which receives the co-operating wedge and support member.

4. A joint according to claim 3, wherein the joining member comprises a generally U-shaped rod, the aperture being defined between the opposed limbs of the rod, and the abutment surface being defined by the looped portion of the rod.

5. A joint according to any one of claims 1–4, wherein said elements are concrete piles.

6. A joint between two construction elements, said joint comprising a joining member extending from one of said elements, via a first opening in a first face of the other element, into a socket formed in said other element, a co-operating wedge member and support member inserted into the socket through a second opening formed in a face of the other element transverse to the first face such that the co-operating wedge member and support member lie between the first face of the said other element and an abutment surface of the joining member, said wedge member and support member having co-operating surfaces which are inclined to said first face of the other element, and screw-threaded means for tightening the wedge member relative to the support member whereby the abutment surface is subjected to a force transversely to said first face in a direction to draw a face of the said one construction element into tight engagement with said first face of the other construction element, said screw-threaded means being rotatably mounted on one of said members and threadedly engaged with the other of said members.

7. A joint substantially as hereinbefore described with reference to the accompanying drawings.

MATHISEN, MACARA & CO.,
Chartered Patent Agents,
Lyon House, Lyon Road,
Harrow, Middlesex, HA1 2ET.
Agents for the Applicants

Printed in England by Her Majesty's Stationery Office.
Published at The Patent Office, 25 Southampton Buildings, London, WC2A 1AY, from which copies may be obtained.
313091—25

1587230 COMPLETE SPECIFICATION

2 SHEETS *This drawing is a reproduction of the Original on a reduced scale*

Sheet 1

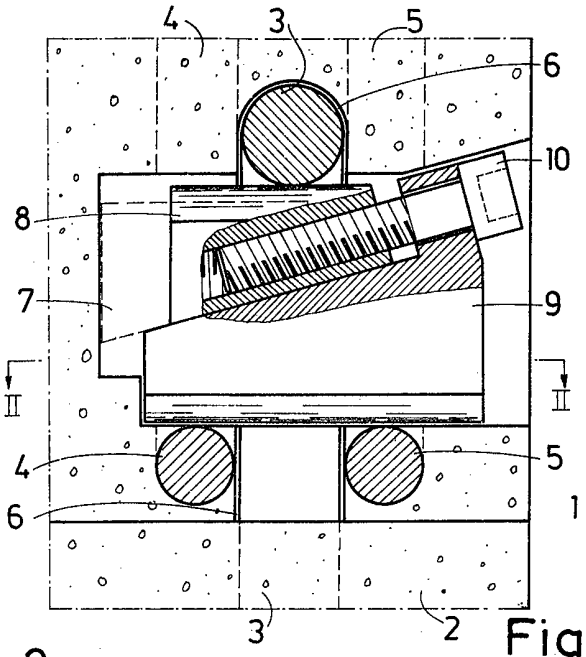

Fig.1

Fig.2

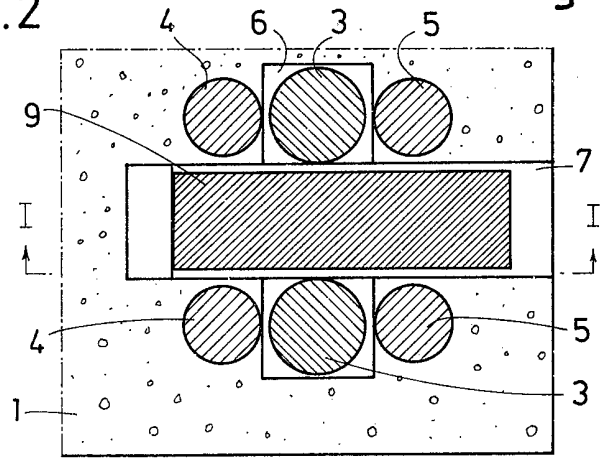

1587230 COMPLETE SPECIFICATION
2 SHEETS *This drawing is a reproduction of the Original on a reduced scale*
Sheet 2

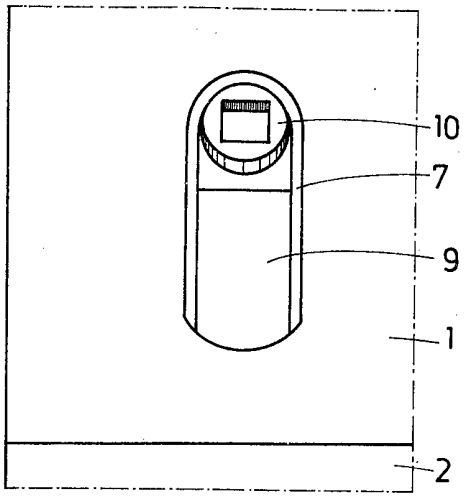

Fig. 3

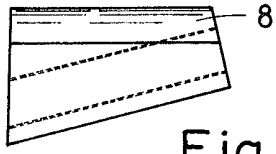

Fig. 4

Fig. 5

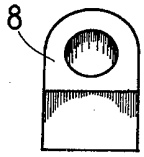

Fig. 6

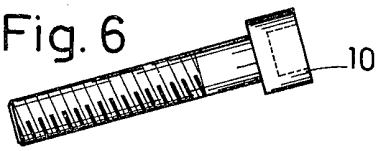

Fig. 7

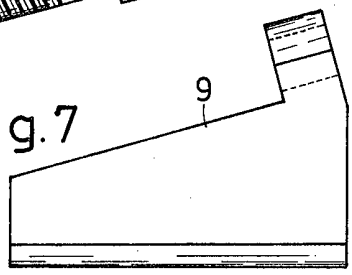

Fig. 8

