June 27, 1967 P. M. L. SIMMONS 3,327,850

APPARATUS FOR SEPARATING PRODUCE

Filed Feb. 8, 1965 4 Sheets-Sheet 1

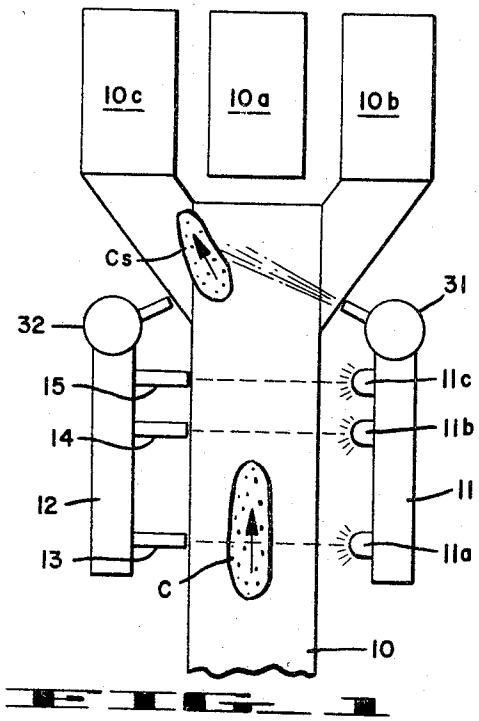

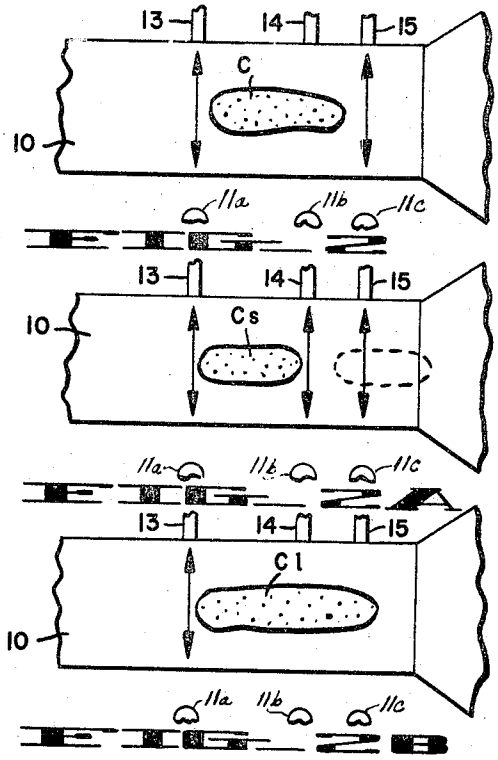

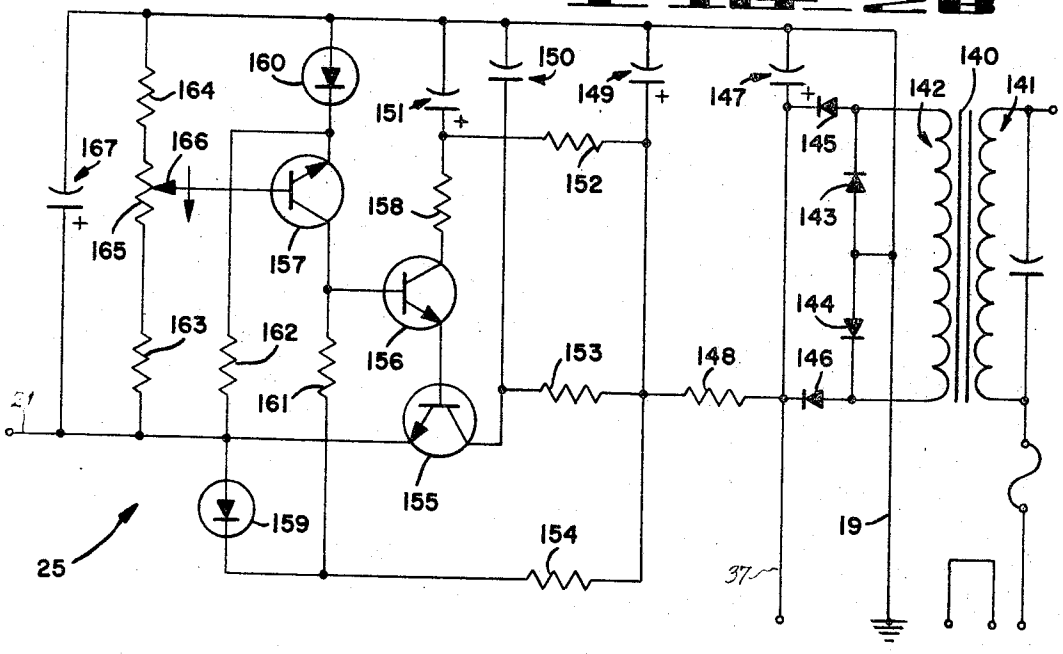

FIG. 2

INVENTOR.
Patrick M. L. Simmons
BY
Allen and Chromy
ATTORNEYS

June 27, 1967 P. M. L. SIMMONS 3,327,850

APPARATUS FOR SEPARATING PRODUCE

Filed Feb. 8, 1965 4 Sheets-Sheet 2

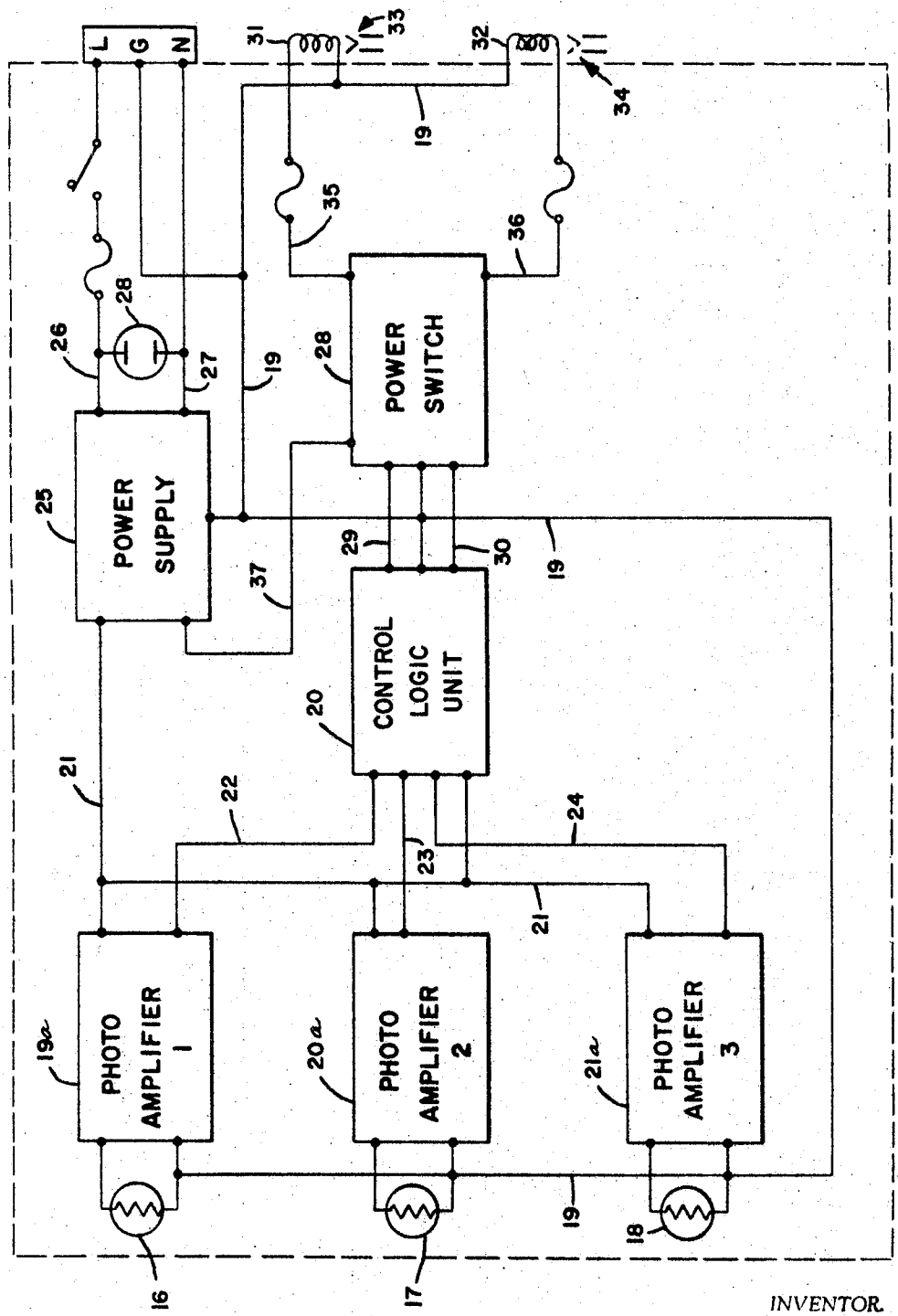

FIG. 3

INVENTOR.
Patrick M. L. Simmons
BY
Allen and Chromy
ATTORNEYS

June 27, 1967 P. M. L. SIMMONS 3,327,850

APPARATUS FOR SEPARATING PRODUCE

Filed Feb. 8, 1965 4 Sheets-Sheet 3

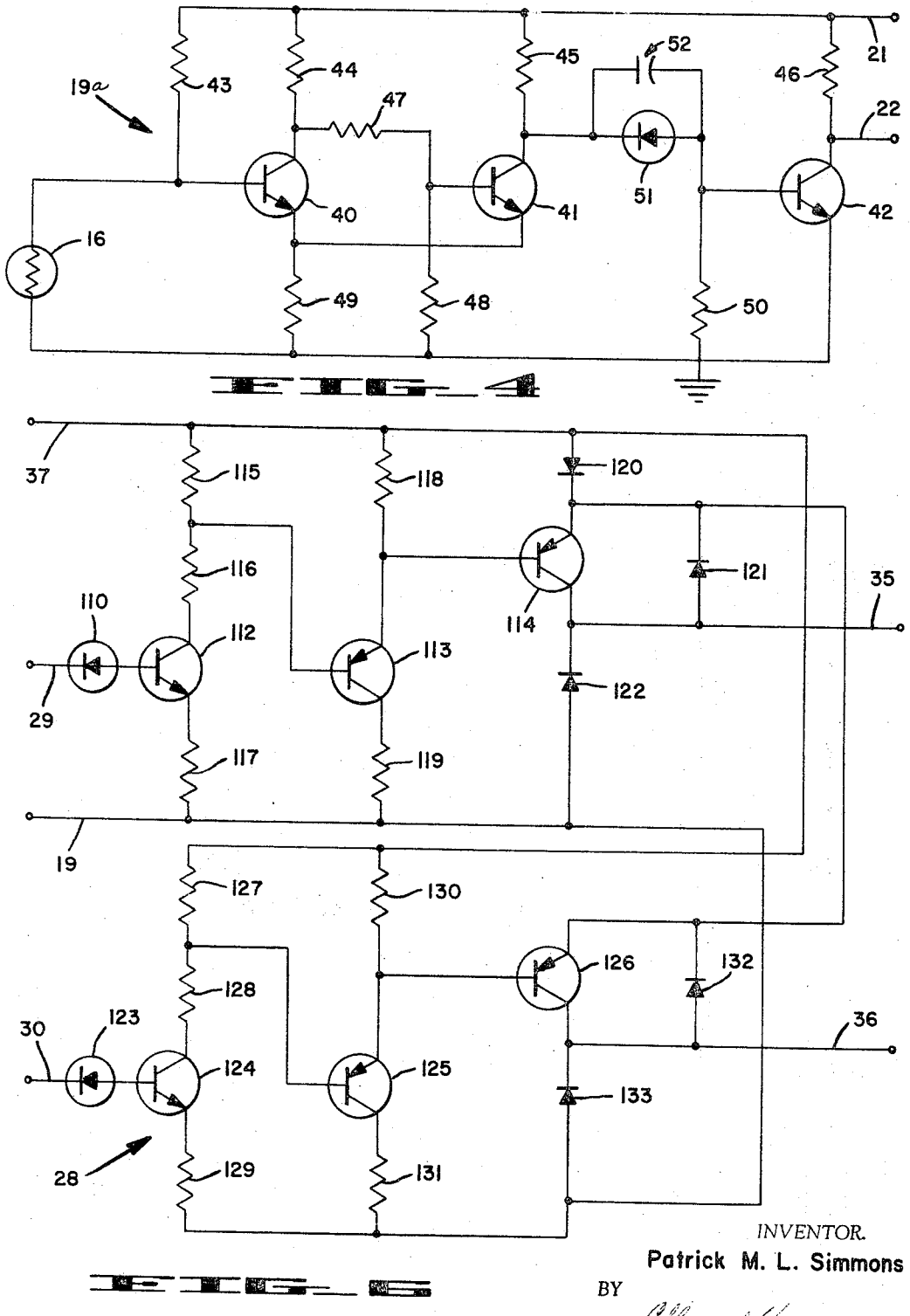

INVENTOR.
Patrick M. L. Simmons

BY
Allen and Chromy

ATTORNEYS

June 27, 1967 P. M. L. SIMMONS 3,327,850

APPARATUS FOR SEPARATING PRODUCE

Filed Feb. 8, 1965 4 Sheets-Sheet 4

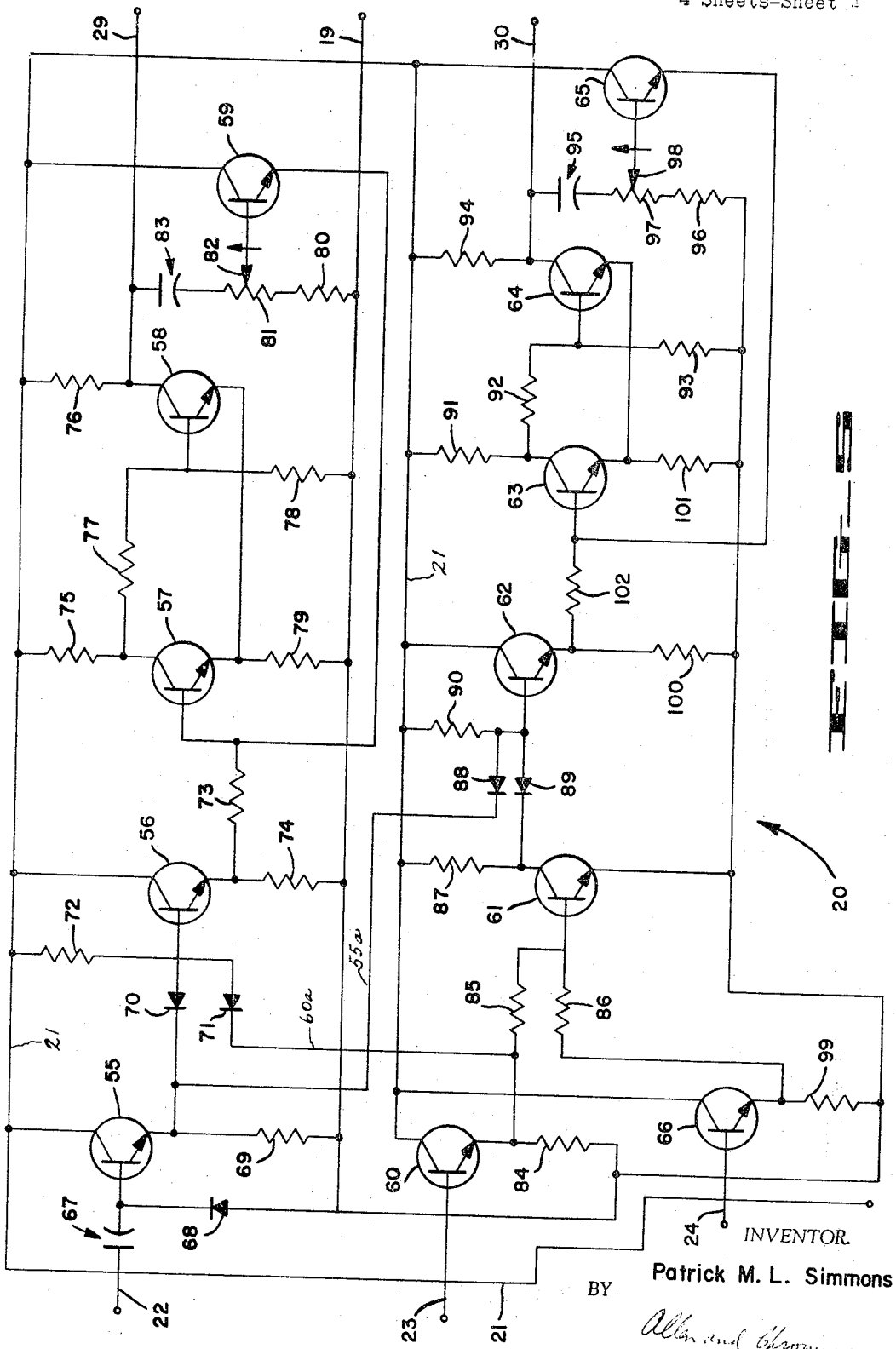

FIG. 5

INVENTOR.

Patrick M. L. Simmons

BY

Allen and Chromy

ATTORNEYS

United States Patent Office

3,327,850

Patented June 27, 1967

3,327,850

APPARATUS FOR SEPARATING PRODUCE

Patrick M. L. Simmons, San Jose, Calif., assignor of one-half to Genevieve I. Magnuson, Saratoga, Calif., and one-half to Genevieve I. Magnuson, Robert Magnuson, and Louis J. Fox, as trustees of the estate of Roy M. Magnuson

Filed Feb. 8, 1965, Ser. No. 431,122

5 Claims. (Cl. 209—111.7)

This invention relates to an electronic apparatus for separating produce and other items into several different length categories.

An object of this invention is to provide an improved electronic apparatus for separating produce such as cucumbers and pickles and other items into several length categories, one of which may be characterized as a normal length and the others of which may be characterized as abnormal lengths.

Another object of this invention is to provide an improved electronic apparatus for length sorting produce and other items whose grade or character is determined by length.

Still another object of this invention is to provide an improved length sorter for produce or the like in which the articles are fed single file to an optical scanning apparatus in which electrical signals are produced, said signals being characterized by the different lengths of the articles to be sorted.

Still another object of this invention is to provide an improved electronic apparatus for separating produce and other items into several length categories; this apparatus is provided with a conveyor for moving a single file of the articles through an optical scanning apparatus in which an electrical signal comprising a short pulse is produced shortly after the complete article enters the scanning area; said apparatus also producing additional electrical signals when a short article is scanned, said additional signals being interrupted when a long article is scanned, whereby the apparatus is enabled to differentiate between these articles of abnormal length so that these articles are deflected by the apparatus from the path followed by the articles of normal length.

Other and further objects of this invention will be apparent to those skilled in the art to which it relates from the following specification, claims and drawing, in which, briefly:

FIG. 1 is a plan view of the optical scanning apparatus showing an article entering the scanning area, and also showing an article of shorter than normal length being deflected from the normal path to be received by the receiver for short articles;

FIG. 2 is a plan view of the optical scanning head of this apparatus showing an article of median or normal length positioned therein;

FIG. 2A is a plan view of the optical scanning head showing an article of short length positioned therein;

FIG. 2B is a plan view of the optical scanning head showing an article of long length positioned therein;

FIG. 3 is a schematic diagram of connections showing the connections to the light sensitive cells of the optical scanning head and also showing the output connected to the solenoids which control the air jets for deflecting the articles of other than the selected median length;

FIG. 4 is a wiring diagram of the amplifier connected to each of the light sensitive cells;

FIG. 5 is a schematic wiring diagram of the control circuit which is responsive to the electrical signals from the three photo amplifier outputs;

FIG. 6 is a schematic wiring diagram of the power switch that is connected to the output of the control circuit and the output of which is connected to the solenoids of the air valve; and

FIG. 7 is a schematic wiring diagram of the power supply employed in accordance with this invention.

Referring to the drawing in detail, reference numeral **10** designates a conveyor for conveying a single file of the articles C which are to be separated according to length. This conveyor may be made up of belts forming a trough or V between them, such as disclosed in application Ser. No. 122,970, filed July 10, 1961 (Case 1402A) and assigned to a common assignee. The output end of this conveyor may be provided with suitable ramps leading to three receptacles **10***a*, **10***b* and **10***c*. The receptacle **10***a*, which is in direct alignment with the conveyor **10**, is provided for receiving the artciles C of a selected median or normal length. The receptacle **10***b* is provided for receiving articles of longer than median or normal length, and the receptacle **10***c* is provided for receiving articles of shorter than median or normal length.

The light bank **11** is provided alongside of the conveyor **10**, and this bank includes lights **11***a*, **11***b* and **11***c* which are spaced predetermined distance apart, depending upon the lengths selected for the different categories. The light sensitive cell bank **12** is provided on the other side of the conveyor **10** and it includes light sensitive cell housings **13**, **14** and **15** which are aligned with the light sources **11***a*, **11***b* and **11***c*, respectively, so as to receive light transmitted from these sources, unless the light is interrupted by the article C passing along the conveyor. The distance between the respective light sources and the corresponding light sensitive cells may be made adjustable so that the median, short and long lengths of the articles to be separated may be adjusted as desired. The light sensitive cells **16**, **17** and **18** are positioned in the housing of the bank **12** in alignment with the collimating tubes **13**, **14** and **15**, respectively, and these light sensitive cells are connected to the inputs of amplifiers **19***a*, **20***a* and **21***a*, respectively, as shown in FIG. 3. The diagram of connections of one of these amplifiers is shown in FIG. 4.

FIGS. 2, 2A and 2B show articles of different lengths passing through the scanning area between the light bank **11** and the light sensitive cell bank **12**. FIG. 2 shows an article C of normal length positioned in the scanning area just after the rear end of this article has cleared the light beam between the light source **11***a* and the tube **13** and with the forward end of this article interrupting the light beam between the light source **11***b* and the tube **14**. Thus, when the rear end of the article C has cleared the light path between the source **11***a* and the tube **13**, the reestablished light beam causes a short pulse to be applied to the input of transistor **55** of the control circuit shown in FIG. 5 through capacitor **67**. Since the light beam between the source **11***b* and the tube **14** is interrupted by the article C, the DC signal normally supplied to the input line **23** of transistor **60** is interrupted. However, since the light beam from source **11***c* to tube **15** has not been interrupted, a DC signal is supplied to the input line **24** of transistor **66** of the control circuit.

In the case of the short article C*s* shown in FIG. 2, after the rear of this article has cleared the light path between the light source **11***a* and the tube **13**, the article is positioned so that it does not interrupt any of the light beams. Thus, for such an article the short pulse is supplied to

the base of transistor 55 and DC signals are also supplied to bases of transistors 60 and 66. In the case of the longer than normal article C*l*, shown in FIG. 2B, the beams from sources 11*b* and 11*c* to tubes 14 and 15, respectively, are both interrupted just after the rear of the article clears the path of the beam passing from source 11*a* to tube 13 and when the short pulse is supplied by amplifier 19*a* to transistor 55 of the control circuit.

The amplifier shown in FIG. 4 illustrates one of the amplifiers 19*a*, 20*a* and 21*a*, shown in FIG. 3, and each of these amplifiers employs three transistors 40, 41 and 42. The base of transistor 40 is connected to one side of the light-sensitive cell 16 and to the lower terminal of resistor 43 through which it is connected to the 12–16 volt supply line 21. The collector of this transistor is connected to line 21 through resistor 44 and to the base of transistor 41 through resistor 47. The emitters of transistors 40 and 41 are connected together to provide emitter-coupled feedback and they are both connected to the ground line 19 through resistor 49. The base of transistor 41 is connected to the ground line 19 through resistor 48. Resistors 44, 47 and 48 are connected in series between the 12–16 volt supply line 21 and ground 19, and the base of transistor 41 is connected to the common connection between resistors 47 and 48. The collector of transistor 41 is connected to the supply line 21 through resistor 45. This collector is also connected to the cathode of diode 51, the anode of which is connected to the base of transistor 42. The anode of diode 51 and base of transistor 42 are also connected to the upper terminal of resistor 50, the lower terminal of which is connected to the ground line 19. A capacitor 52 is connected across diode 51. The collector of transistor 42 is connected to the output line 22 and to the lower terminal of resistor 46, the upper terminal of which is connected to the line 21. The emitter of transistor 42 is connected to ground line 19.

The control circuit 20, shown in FIG. 5, is provided with transistors 55, 56, 57, 58 and 59 in the upper transistor bank thereof, and leading to the output line 29 which may be referred to as the signal output for the short articles. Additional transistors 60, 61, 62, 63, 64 and 65 are provided to the control circuit, and these lead to the output line 30 which may be designated as the signal output for the long articles. It will be noted that there are interconnections between these two transistor lines, for example, the output of transistor 55 is connected by line 55*a* to the cathode of diode 88, the anode of which is connected to the base of transistor 62, and the output of transistor 60 is also connected by line 60*a* to the cathode of diode 71, the anode of which is connected to the base of transistor 56. Transistor 66, which receives its input from the output of the third amplifier 21*a*, is not provided with a separate output line but furnishes its signal output to the base of transistor 61 through the resistor 86.

Transistors 55 to 66 inclusive of the control circuit are connected as follows. The input line 22 is coupled through capacitor 67 to the base of transistor 55, as previously mentioned, and the cathode of diode 68 is also connected to the base of this transistor. The anode of this diode is connected to the ground line 19. The emitter of transistor 55 is connected to this ground line through resistor 69, and the collector of this transistor is connected to the positive supply line 21 which leads to the power supply 25, as shown in FIG. 3. The emitter of transistor 55 is also connected to the cathode of diode 70 and to the cathode of diode 88 by line 55*a*. The anode of diode 70 is connected to the base of transistor 56, to the anode of diode 71 and to the bottom terminal of resistor 72. Diodes 70 and 71 form a coincidence AND gate connected to the base of transistor 56. This gate allows the transistor 56 to conduct current only when the signals at the cathodes of diodes 70 and 71 are simultaneously positive. The upper terminal of resistor 72 is connected to the positive supply line 21, and the collector of transistor 56 is also connected to this line. The emitter of transistor 56 is connected to the ground line 19 through resistor 74 and to the base of transistor 57 through resistor 73. The collector of transistor 57 is connected to the positive supply line 21 through resistor 75 and to the base of transistor 58 through resistor 77. The base of transistor 58 is also connected to the ground line 19 through resistor 78. The emitters of transistors 57 and 58 are connected together to provide emitted coupled feedback and both of these emitters are connected to the ground line 19 through the resistor 79.

The collector of transistor 58 is connected to the supply line 21 through resistor 76 and to the output line 29. It is also coupled through capacitor 83 to the upper terminal of the resistor 81. The lower terminal of this resistor is connected to the ground line 19 through resistor 80. A variable contact 82 is provided to resistor 81, and this variable contact is connected to the base of transistor 59. The collector of this transistor is connected to the supply line 29 and the emitter is connected to the base of transistor 57 to provide capacitative regenerative feedback to the latter transistor which is variable by varrying contact 82, that is, by varying the strength of the signal applied to the base of transistor 59.

Transistors 60, 61, 62, 63, 64 and 65 are connected in a circuit similar to that of transistors 55–59 with differences which will be apparent from the following description. No capacitor is provided in the input line 23 leading to the base of transistor 60 so that DC signals are supplied to the base of this transistor from the output of amplifier 20*a*. The same is true of transistor 66 and the input line 24 thereof is connected to the output of amplifier 21*a* so that DC signals are provided to this transistor also. The collectors of both transistors 60 and 66 are connected directly to the supply line 21. The emitters of transistors 60 and 66 are connected to the ground line 19 through resistors 84 and 99 respectively. The emitter of transistor 60 is also connected to the cathode of diode 71, the anode of which is connected to the base of transistor 56. The emitters of transistors 60 and 66 are connected to the base of transistor 61 through resistors 85 and 86, respectively. Resistors 85 and 86 and transistor 61 form an inverting OR gate and an output is produced if an input is provided from either transistor 60 or transistor 66. No resistor is provided in the emitter circuit of transistor 61 and this emitter is connected directly to the ground line 19. Resistor 87, however, is provided between the collector of this transistor and the supply line 21. The collector of this transistor is also connected to the cathode of diode 89, the anode of which is connected to the base of transistor 62. The anode of diode 88 and the lower terminal of resistor 90 are also connected to the base of transistor 62. Thus, if transistor 61 does not conduct and a pulse is supplied to the cathode of diode 88 over line 55*a*, transistor 62 will be rendered conductive.

The upper terminal of resistor 90 is connected to the supply line 21. The collector of transistor 62 is also connected directly to the supply line 21, and the emitter thereof is connected to the ground line 19 through resistor 100. This emitter is also connected to the base of transistor 73 through resistor 102. Resistors 91, 92 and 93 are connected in series between the line 21 and the ground line 19, and the common connection between resistors 91 and 92 is connected to the collector of transistor 63. The common connection between resistors 92 and 93 is connected to the supply line 21, and this collector is also sistors 63 and 64 are connected together to provide emitter coupled feedback, and both of these emitters are connected to the ground line 19 through resistor 101. The collector of transistor 64 is connected to the lower terminal of resistor 94, the upper terminal of which is connected to the supply line 21, and this collector is also connected to the upper terminal of capacitor 95 and to the output line 30. The lower terminal of capacitor 95

is connected to the upper terminal of resistor **97**, and the lower terminal of this resistor is connected to the ground line **19** through resistor **96**. Resistor **97** is provided with a variable contact which is connected to the base of transistor **65**. The collector of this transistor is connected to the supply line **21** and the emitter is connected to the base of transistor **63** to provide capacitative regenerative feedback thereto.

Each group of transistors **57**, **58** and **59** and transistors **63**, **64** and **65** form a multivibrator which is basically of the Schmitt trigger type with a very long coupling time constant and regenerative feedback which alters the bistable Schmitt trigger circuit to a monostable vibrator. These multivibrators in each case function as pulse stretcher circuits with a relatively high amplification factor, and they are capable of being triggered by a pulse a millisecond long to provide an output pulse which may be adjusted by a variable RC circuit from approximately 100 milliseconds to several seconds.

Thus, the monostable multivibrator comprising the transistors **57**, **58** and **59** may be triggered by supplying a relatively short pulse to the base of transistor **57**, and by adjusting the variable contact **82** of resistor **81**, the output pulse supplied by transistor **58** to line **29** may be adjusted to have a length from approximately 100 milliseconds to several seconds.

Likewise, the monostable multivibrator comprising the transistors **63**, **64** and **65** may be triggered by supplying a relatively short pulse to the base of transistor **63** from the output of transistor **62** by controlling the variable contact **98** of resistor **97** so that a relatively long pulse may be supplied to the line **30**, varying in length from approximately 100 milliseconds to several seconds.

The output supplied to line **29** of the control unit is derived from the collector of transistor **58**. This output is supplied to the cathode of diode **110** of the power switch **28**, the wiring diagram of which is shown in FIG. 6, and output line **30** of the control unit is connected to the cathode of diode **123** of the power switch.

The first unit of the power switch **28** is provided with the diode **110**, the anode of which is connected to the base of transistor **112**. The emitter of transistor **112** is connected to the ground line **19** through resistor **117**, and the collector of this transistor is connected to the 24-volt line **37** through resistors **115** and **116** which are connected in series. The common connection of resistors **115** and **116** is connected to the base of transistor **113**. The collector of transistor **113** is connected to the ground line **19** through resistor **119**, and the emitter of this transistor is connected to the positive 24-volt line **37** through resistor **118**. The emitter of transistor **113** is also connected to the base of transistor **114**. The collector of transistor **114** is connected to the cathode of diode **122**, to the anode of diode **121**, and to the output line **35**. The anode of diode **122** is connected to the ground line **19**. The cathode of diode **121** is connected to the emitters of transistors **114** and **126** and to the cathode of diode **120**, the anode of which is connected to the positive 24-volt line **37** which is connected to the power supply **25**.

The second unit of the power switch **28** is provided with the diode **123**, the anode of which is connected to the base of transistor **124**. The emitter of transistor **124** is connected to the ground line **19** through resistor **129**, and the collector of this transistor is connected to the 24-volt line **37** through resistors **127** and **128** which are connected in series. The common connection of resistors **127** and **128** is connected to the base of transistor **125**. The collector of transistor **125** is connected to the ground line **19** through resistor **131**, and the emitter of this transistor is connected to the positive 24-volt line **37** through resistor **130**. The emitter of transistor **125** is also connected to the base of transistor **126**. The collector of transistor **126** is connected to the cathode of diode **138**, to the anode of diode **132**, and to the output line **36**. The anode of diode **138** is connected to the ground line **19**.

Output line **35** of power switch **28** is connected to one side of the solenoid **31** and the other side of this solenoid is connected to the ground line **19**. Output line **36** of power switch **28** is connected to one side of the solenoid **32** and the other side of this solenoid is connected to the ground line **19**.

The wiring diagram of the power supply **25** is shown in FIG. 7. This power supply includes a transformer **140** having a primary **141** that is adapted to be connected to a conventional 115 volt, 60 cycle power supply and a secondary **142**, the output of which is rectified by rectifiers **143**, **144**, **145** and **146**. One side of the secondary **142** is connected to the anode of diode **145** and to the cathode of diode **143**. The other side is connected to the anode of diode **146** and the cathode of **144**. The anodes of diodes **143** and **144** are connected together and to the ground line **19**. The cathodes of diodes **145** and **146** are connected together to the input of the filter circuit and to output line **37** which supplies the unfiltered 24-volt rectified AC for the solenoids **31** and **32** through power switch **28**.

A resistor **148** is connected between the lower terminals of capacitors **147** and **149**, the upper terminals of which are connected together to ground line **19**. Resistor **153** is connected between the lower terminal of capacitor **149** and the collector of transistor **155**. Transistor **155** functions as a series voltage regulator and transistors **156** and **157** form an amplifier supplying bias to the base of transistor **155**, the collector-emitter circuit of which is connected in the positive line **21**. A resistor **152** is connected between capacitor **149** and a common connection between capacitor **151** and the upper terminal of resistor **158**. The upper terminals of capacitors **147**, **149**, **150** and **151** are connected to the ground line **19**. The lower terminal of capacitor **150** is connected to the collector of transistor **155**, and the lower terminal of the resistor **158** is connected to the collector of transistor **156**. The emitter of transistor **156** is connected to the base of transistor **155** and the base of transistor **156** is connected to the collector of transistor **157** and to the upper terminal of resistor **161**. The emitter of transistor **157** is connected to the cathode of diode **160** and the anode of this diode is connected to the ground line **19**. The emitter of transistor **157** is also connected to the upper terminal of resistor **162** and the lower terminal of this resistor is connected to the emitter of transistor **155** and to the anode of diode **190**. The cathode of diode **190** is connected to the lower terminal of resistor **161** and to the left hand terminal of resistor **154**. The left hand terminal of this latter resistor is connected to the common connection between resistors **148**, **152** and **153**. The emitter of transistor **155** is connected to the lower terminals of resistors **162** and **163**, and to the lower terminal of capacitor **167** and also to the output line **21** which supplies the current to the photo amplifiers **19***a*, **20***a* and **21***a*, and the control amplifier **20**. Resistors **163**, **164** and **165** are connected in series between the ground line **19** and the output line **21**, and resistor **165** is provided with a variable contact **166** which is connected to the base of transistor **157**. Variable contact **166** provides a control whereby the output voltage supplied to line **21** may be varied between certain limits.

The operation of this apparatus may be summarized as follows. Assuming that a median length article C is positioned in the scanning area, as shown in FIG. 2, so that the rear end of this article has just cleared the path for the light rays between source **11***a* and tube **13**, at such time a signal is supplied by amplifier **19***a* to the input line **22** and a short pulse is passed to the base of transistor **55** through capacitor **67**. This pulse is transmitted to the cathode of diode **70**. However, since no signal is supplied over line **23** to the base of transistor **60** from the amplifier **20***a*, because the light path between the light

source 11*b* and the tube 14 is interrupted, no signal is supplied by transistor 60 to the cathode of diode 71. Consequently, the AND gate comprising diodes 70 and 71 does not supply an output to the base of transistor 56. However, a signal is supplied over line 55*a* to the cathode of diode 88. This signal is, however, rendered ineffective by another signal supplied by transistor 61 to the cathode of diode 89. This latter signal is produced by the amplifier 21*a* inasmuch as the light sensitive cell 18 is energized by the light beam passing from light source 11*c* to the tube 15, and this signal is supplied over the line 24 to the base of transistor 66 which supplies it to the base of transistor 61. It will be noted that the anodes of diodes 88 and 89 are connected to the base of transistor 62 and that this base is supplied through resistor 90 from the supply line 21. Resistor 90 is provided with a relatively high resistance value and as a result, if both diodes 88 and 89 are activated simultaneously by signals, the voltage drop across resistor 90 is sufficiently large to prevent transistor 62 from conducting current. Thus, when the median size article C is positioned in the scanning area, neither output line 29 nor output line 30 of the control circuit 20 is supplied with output.

On the other hand, when a shorter than median length article C*s* is positioned in the scanning area, as shown in FIG. 2A, light from the light sources activates all three of the light sensitive cells 16, 17 and 18. Thus, in this case signals are supplied to the cathodes of both diodes 70 and 71 and this AND gate supplies a signal to the base of transistor 56. Since the signal supplied to diode 70 is relatively short, the output signal of transistor 56 supplied to the base of transistor 57 will be in the form of a short pulse. This, however, is sufficient to trigger the monostable multivibrator comprising transistors 57, 58 and 59, which produces a relatively long pulse that is supplied to output line 29. The length of this pulse may be controlled, as previously described. At the same time, no output is supplied on line 30 inasmuch as transistor 62 is cut off, since both diodes 88 and 89 are supplied with signals. The signal from line 29 is supplied to the power switch 28 and is amplified in the upper section of this power switch including transistors 112, 113 and 114. This amplified signal is supplied to output line 35 which is connected to the solenoid 31. Thus, solenoid 31 is energized and it functions to open the air valve 33 so that a jet of air is applied to deflect the short article C*s*, as shown in FIG. 1. This short article is thus diverted to the receptacle or conveyor 10*c* which is provided for receiving the shorter articles.

When the longer than median length article C*l* is positioned in the scanning area, as shown in FIG. 2B, it interrupts the light beams from light sources 11*b* and 11*c*. Thus, no signals are supplied to the bases of transistors 60 and 66. A short signal is supplied to the base of transistor 55 which functions to supply this signal to line 55*a* and to the cathode of diode 88. The AND gate comprising diodes 70 and 71 is ineffective since no signal is supplied to the cathode of diode 71. The signal supplied to diode 88 is, however, passed to the base of transistor 62, and from this transistor to the base of transistor 63. Transistors 63, 64 and 65 comprise a monostable multivibrator which is arranged to lengthen the pulse supplied to the base of transistor 66 and supplies this lengthened pulse to the output line 30 which is connected to the power switch 28. The lower channel of the power switch, including transistors 124, 125 and 126, receives and amplifies this signal. The amplified signal is supplied to the output line 36 which is connected to the solenoid 32. Thus, solenoid 32 is energized and functions to open the air valve 34 which supplies an air jet that operates to deflect the longer than median length article C*l* to the receptacle or conveyor 10*b*, shown in FIG. 1.

While I have shown a preferred embodiment of the invention, it will be understood that the invention is capable of variation and modification so that the form shown should be limited only by the scope of the claims appended hereto.

What I claim is:

1. In apparatus for separating articles such as cucumbers or the like according to median lengths and abnormal lengths, comprising the combination of an article conveyor, means associated with said conveyor producing a signal comprising an electrical pulse when an article passes said means, means producing additional signals associated with said conveyor, electrical control apparatus having means responsive to said pulse and to the presence or absence of said additional signals, said last mentioned means controlling which of a pair of output circuits of said control apparatus is to be activated, means connected to said output circuits separating the articles of abnormal length from those of median length, said signal producing means comprising a plurality of spaced light sources and a light sensitive cell aligned with each of said light sources, said sources being spaced such that a shorter than median article does not interrupt any of the light passing from said sources to said cells when the length of this article is being classified, and an article of median length interrupts light passing from one of said sources to an aligned cell, and a longer than medium length article interrupts light from more than one of said sources to aligned cells when the lengths thereof are being classified.

2. In apparatus for separating articles such as cucumbers or the like according to median lengths and abnormal lengths, comprising the combination of an article conveyor, means associated with said conveyor producing a signal comprising an electrical pulse when an article passes said means, means producing additional signals associated with said conveyor, electrical control apparatus having means responsive to said pulse and to the presence or absence of said additional signals, said last mentioned means comprising a pair of circuits selecting which of a pair of output circuits of said control apparatus is to be activated, means disabling one of said selecting circuits and means activating the other of said selecting circuits when a shorter than median length article is being classified, said responsive means including means responsive only to said electrical pulse activating only said one of said selecting circuits when a longer than median length article is being classified.

3. In apparatus for separating articles such as cucumbers or the like according to normal lengths or abnormal lengths, as set forth in claim 1, and further characterized in that said responsive means includes an AND gate that is activated when a shorter than median length article is being classified, and a pulse lengthening circuit connected to receive the pulse passed by said AND gate, the output of said pulse lengthening circuit being connected to one of said output circuits.

4. In apparatus for separating articles such as cucumbers or the like according to normal lengths or abnormal lengths, as set forth in claim 3, and further characterized in that said responsive means includes means activated by said pulse in the absence of said additional signals to activate another pulse lengthening circuit when an article of longer than median length is being classified, said last mentioned pulse lengthening circuit being connected to the other of said output circuits.

5. In apparatus for separating articles such as cucumbers or the like according to length, comprising the combination of article conveying means, means associated with said conveying means for producing electrical signals characterized by different lengths of the articles conveyed by said conveying means, electrical apparatus responsive to said signals, said electrical signals comprising a pulse signaling the initiation of length evaluation of the article conveyed to said signal producing means, said electrical apparatus comprising a pair of pulse lengthening circuits, and means controlling the transmission of said pulse to one of said pulse lengthening circuits when a shorter than median length article is being classified,

and means controlling the transmission of said pulse to the other of said pulse lengthening circuits when a longer than median length article is being classified, and means connected to said pulse lengthening circuits separating the shorter than median length articles and the longer than median length articles from the median length articles.

References Cited

UNITED STATES PATENTS

2,916,633 12/1959 Stone et al.

2,982,403 5/1961 Harmon ..... 209—111.7 X
3,038,604 6/1962 Muller ..... 209—82
3,232,429 2/1966 Norwich ..... 209—111.7

M. HENSON WOOD, JR., *Primary Examiner.*

J. N. ERLICH, *Assistant Examiner.*