G. P. THOMAS.

SPACING TABLE CARRIAGE.

APPLICATION FILED OCT. 17, 1911.

1,068,465.

Patented July 29, 1913.

3 SHEETS—SHEET 1.

FIG. 1.

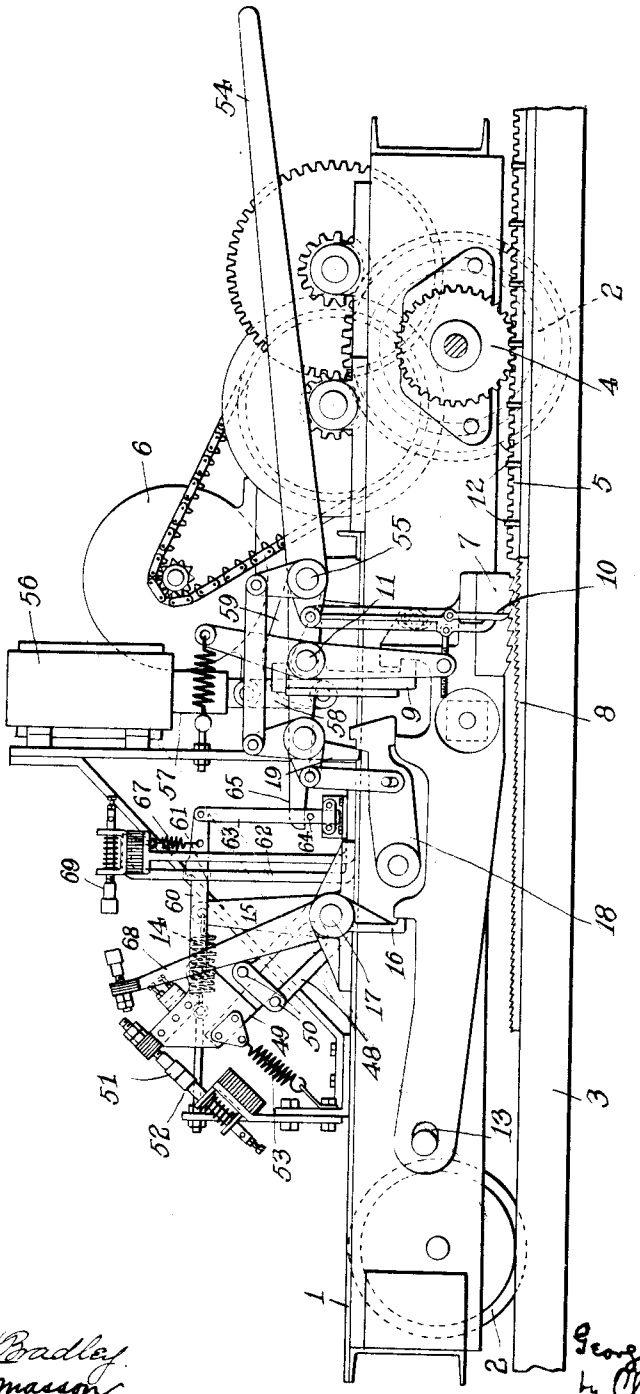

WITNESSES:

J. Herbert Bradley

Francis J. Tomasson

INVENTOR

George Paul Thomas

by Christy & Christy

Attys.

G. P. THOMAS.

SPACING TABLE CARRIAGE.

APPLICATION FILED OCT. 17, 1911.

1,068,465.

Patented July 29, 1913.

3 SHEETS—SHEET 2.

FIG. 2.

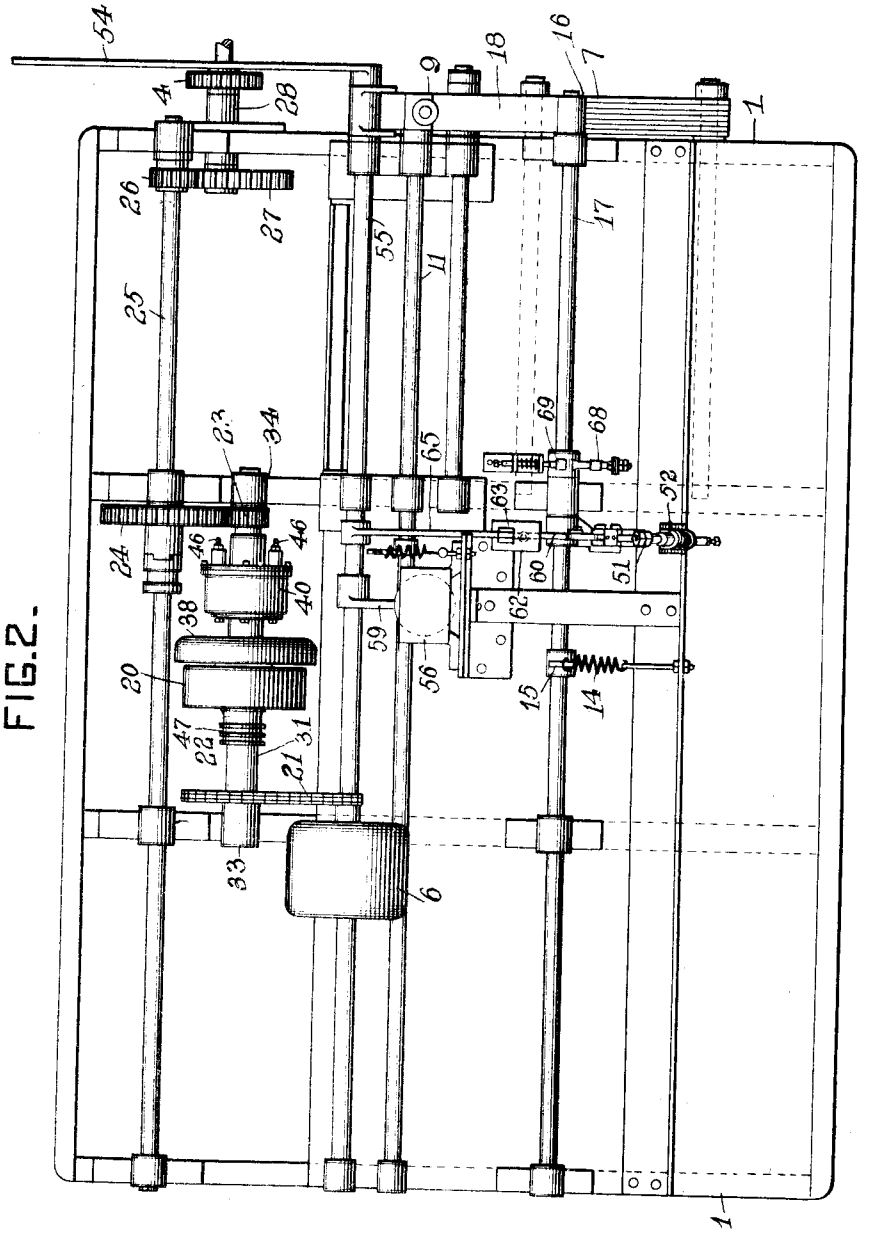

WITNESSES:

J. Herbert Bradley.

Francis J. Tomasson

INVENTOR

George Paul Thomas

by Christy & Christy Atty's

G. P. THOMAS.

SPACING TABLE CARRIAGE.

APPLICATION FILED OCT. 17, 1911.

1,068,465.

Patented July 29, 1913

3 SHEETS—SHEET 3.

FIG. 3.

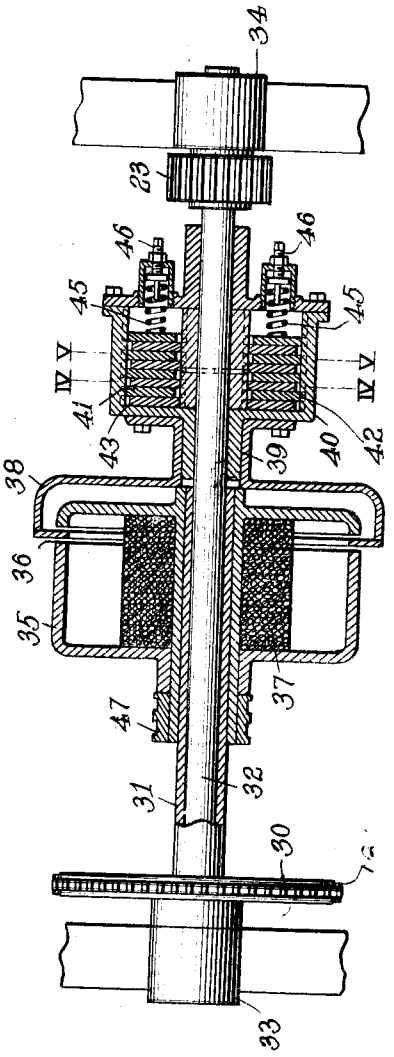

FIG. 5.

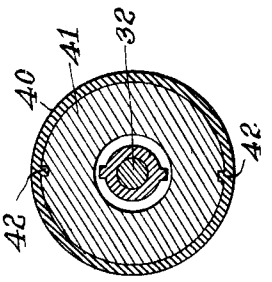

FIG. 4.

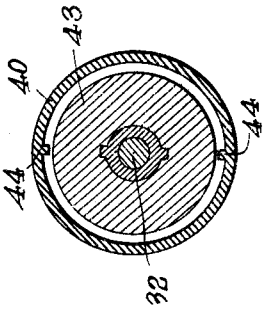

WITNESSES:

Herbert Bradley.

Francis J. Tomasun

INVENTOR

George Paul Thomas

by Christy & Christy

UNITED STATES PATENT OFFICE.

GEORGE PAUL THOMAS, OF GLENSHAW, PENNSYLVANIA.

SPACING-TABLE CARRIAGE.

1,068,465. Specification of Letters Patent. Patented July 29, 1913.

Application filed October 17, 1911. Serial No. 655,223.

To all whom it may concern:

Be it known that I, GEORGE PAUL THOMAS, residing at Glenshaw, in the county of Allegheny and State of Pennsylvania, a citizen of the United States, have invented or discovered certain new and useful Improvements in Spacing-Table Carriages, of which improvements the following is a specification.

My invention relates to machines, which, while traveling over a prescribed course, are adapted to be stopped at predetermined intervals by suitably provided stop elements; and finds specific application in spacing-table carriages such as are described in my Letters Patent No. 908,818.

The object of my invention is to improve the general construction and operation of such machines.

In the accompanying drawings, which form part of my specification, and in which my invention is embodied, Figure 1 is a side elevation of a carriage; Fig. 2 is a plan view of the carriage shown in Fig. 1, but on a reduced scale; Fig. 3 is an enlarged sectional view of the driving mechanism; and Figs. 4 and 5 are sectional views taken on the lines IV IV and V V, respectively, of Fig. 3.

In the several figures like numerals are used to designate like parts.

The general structural features and the preferred stopping mechanism of the spacing table shown herein are similar, in all essential respects to that shown in my above stated Letters Patent. A suitable frame or truck 1 forms the structural part of the carriage, and is provided with wheels 2, which movably support the carriage on the track 3. The carriage is moved along the tracks 3 by means of the cog-wheel 4, engaging the rack 5, the said cog-wheel being driven by the motor 6 through interposed mechanism, hereinafter more fully described. The stopping mechanism consists of detents 7, normally held out of engagement with the teeth 8 (the position shown in Fig. 1) by means of a catch 9, which catch is secured to the rotatable shaft 11. A finger 10 having indirect connection to the said shaft 11 may be tripped by the stops 12 (suitably arranged in the line of advance of the said finger), to the end that the shaft 11 may rotate and cause the catch 9 to release its engagement with the detents 7, which will then drop of their own weight and engage the teeth 8. Furthermore, as in my aforesaid patent, the detents are preferably slotted as at 13; and held yieldingly forward by the spring 14, attached to an arm 15, which, together with the catch 16, is rigidly secured to a rotatable shaft 17. And a locking mechanism to lock the detents in their downward and rearward position is provided, consisting of a finger 18, pivotally mounted to the frame and resting on detents 7, and a pivotally mounted finger 19, resting against finger 18. When detents 7 fall, finger 18 swings and by suitable notch and shoulder configuration formed on its opposite faces, locks detent 7 against forward movement and at the same time is locked against its own movement by finger 19.

The driving motor 6 may be mounted on the carriage, and preferably runs continuously during the punching operation. To the end that the carriage will run smoothly and have no tendency to rebound when stopped, I preferably arrange the several parts of the driving mechanism, interposed between the motor 6 and the cog-wheel 4, in such a manner that a portion of the said interposed driving mechanism will continue to move after the carriage has been stopped, such movement being effective to apply a gradually diminishing force to the cog-wheel 4 so that the carriage may be held firmly against the stops. The means for accomplishing this end preferably consist of a double clutch, and as specifically shown herein, consist of magnetic and friction clutches. One member of the magnet clutch may be suitably connected to the armature of the motor 6, and one member of the friction clutch may be suitably connected to the cog-wheel 4; and the second member of each clutch may be connected so as to form a moving part, which, by its momentum, acting through the friction clutch, will be effective to hold the cog-wheel 4 from moving backward. Referring more particularly to the drawings, power is transmitted from the motor to the said cog-wheel preferably by chain drive 21, shaft 22, yielding clutch member 20, gear-wheels 23 and 24, shaft 25, gear wheels 26 and 27, and shaft 28, upon which the cog-wheel 4 is mounted.

While I do not wish to limit myself to any specific yielding clutch, my preferred form is shown in Fig. 3, and consists of a magnetic clutch and a friction clutch. A

sprocket wheel 30, rotated by means of the chain drive 21, may be secured rigidly to a sleeve 31, rotatably mounted upon the shaft 32, which shaft may be loosely mounted in bearings 33 and 34; and a cylinder 35, provided with a circumferential slot 36, may be secured to the said sleeve 31. Within the said cylinder, and rigidly secured to it and the sleeve 31, a magnetic coil 37 may be mounted, the coil being effective, when rotated (and when a current of electricity is passed through it) to drag with it a second cylinder 38, one end of which may extend through the slot 36 of the cylinders 35, and the other end of which is rigidly secured to a second sleeve 39, also loosely mounted on the shaft 32. The said second-named sleeve 39 may also have a second cylinder 40 rigidly secured to it, within which suitable friction clutch members may be arranged. The friction clutch preferably consists of a series of disks 41, secured, as by keys 42, to the shell or cylinder 40; and, alternating with the disks 41, a second series of disks 43 secured to the shaft 32, as by keys 44 (see Figs. 4 and 5). To the end that the said alternating disks may be held in a proper frictional contact with each other, coil springs 45 may be provided, the compression of which may be adjusted, as by screws 46. The further details of construction of my yielding connection member consist of a suitable brush contact bar 47, through which an electrical current may pass to the magnetic coils 37; and a suitable circuit-breaker, effective to break the circuit through the coils 37 simultaneously with the stopping of the carriage, the construction of which circuit-breaker will be hereinafter more fully explained.

In the operation of the above described yielding connection, the sleeve 31, rotated by the chain 21 and sprocket wheel 30, is effective, when the circuit through the coil 37 is completed, to yieldingly drive the sleeve 39 by magnetic attraction of the cylinder 38. The sleeve 39, when yieldingly driven, is effective to drive the shaft 22 and gear-wheel 23 by means of the friction disks 41 and 43, secured alternately and respectively to the cylinder 40 and the said shaft 32. It will be understood of this yielding connection that, as long as it is desired to have the carriage advance, current is supplied to the coils 37, and that, when a stop is desired, the circuit is broken, so that there is no magnetic force in the cylinder 35 to cause the cylinder 38 to be rotated with it. Also, it will be understood that, when the current through the coils 37 is broken and the carriage simultaneously stopped (as hereafter described), a portion of the double clutch mechanism will continue to rotate, such portion consisting of the cylinder 38, sleeve 39 and disks 41; and that such portion will, acting through disks 43, shaft 32, cog-wheel 23, etc., be effective to apply a gradually diminishing force to the cog-wheel 4, whereby the carriage will be held firmly against the stops or detents. As heretofore mentioned, a circuit-breaker is provided to control the circuit through the magnetic coil 37. I preferably correlate the operation of such a circuit-breaker with the operation of the stopping mechanism; and to such an end an arm 48 may be rigidly secured to the rotatable shaft 17, and a second arm 49 may be pivoted to the arm 48, the arrangement being such that the arm 49 may move, with relation to the arm 48, between the pins 50. At the end of the arm 49, a contact piece 51 may be secured, which contact piece may coöperate with a stationary contact piece 52 to complete the desired circuit. The contact piece 51 may be yieldingly held in engagement with the contact piece 52 by means of a spring 53. The arrangement of the several parts of the circuit-breaker thus far described, is such that, when the detents 7 drop into engagement with the teeth 8, and move rearwardly with relation to the carriage 1, the arm 48 will rotate with the shaft 17, and by its rotation will lift the contact member 51 from engagement with the contact member 52, it being understood that the shaft 17 is caused to rotate by means of the lever 16 bearing against the notched portion of the moving detents 7. Furthermore, it will be understood of this construction that the circuit will remain open as long as the detents 7 are held locked in their rearward position.

The means employed for releasing the carriage from its locked position are preferably similar to the means employed for the same purpose in my heretofore mentioned Letters Patent, and consist of a hand lever 54, rigidly secured to the rotatable shaft 55, to which shaft link and bell-crank connections are provided as shown to the finger 18 and the detents 7, the arrangement preferably being such that the finger 18 is first unlocked, then raised, and, following the raising of the finger 18, the detents 7 are raised until they are locked by the catch 9. In addition to the hand lever 54 I have shown a solenoid 56, automatically operative, after the operation of the punching machine, to rotate the shaft 55 to accomplish the unlocking, as described. The core 57 of the said solenoid may be connected to the shaft 55 by a link 58 and arm 59, and the arrangement may be such that, when the solenoid is inactive, the weight of the said core may be effective to overbalance the weight of the arm 54. To the end that contact may not be established through the contact pieces 51 and 52 immediately upon the raising of the fingers 18, I secure a link 60 to the arm 49, and I support the link by passing it through the slot 61 of the standard 62. At the end

of the said link 60, a second link 63 may be pivoted, as shown, and may be provided with a pin 64 on which an arm 65 may rest, the said arm 65 being rigidly secured to the shaft 55. Furthermore the link 60 may be provided with a spring 67, effective, when the arm 65 is raised and the link 60 moved to the right, to lift the said link into notched engagement with the standard 62.

In the operation of the circuit breaking mechanism, the arm 49, being raised, causes the link 60 to move to the right, the said link preferably being held down against the bottom of the slot 61, as by means of the weight of the solenoid core 57, acting indirectly through link 58, arm 59, shaft 55, arm 65, and pin 64. When the shaft 55 is rotated, either by the hand lever 54 or the solenoid 56, to accomplish an unlocking of the fingers 19 and 18, the link 60 may be lifted into notched engagement with the standard 62; and, after the entire operation of unlocking the carriage has been accomplished, the arm 65 will, while it is being lowered, engage the pin 64 and be effective to counteract the effect of the spring 67, to the end that the link 60 may be released and contact reëstablished between the contact members 51 and 52. In this disclosure I have also shown a second circuit-breaker, effective to control the punch operating circuit. Such circuit-breaker preferably consists of a movable contact arm 68 rigidly secured to the rotatable shaft 17, and a coöperating stationary contact member 69. These contact members are so arranged that, when the carriage is stopped, the circuit will be completed through the punch-operating mechanism to the end that the punch may be automatically set in motion at the proper time.

It will be understood of my invention that, when the circuit through the magnetic coil 37 has been broken, the momentum of the cylinder 38 and the parts directly connected to it will be effective to hold the carriage in a firm locked position so that no rebound is possible.

I claim herein as my invention:

1. The combination with a spacing table provided with a series of stops, of a carriage movable with relation to said table, said carriage provided with means for engaging said table stops, a driving mechanism, a motor, and means effective upon the stopping of the said carriage for holding said stop-engaging means firmly against the said stops, substantially as described.

2. In a spacing table carriage, the combination of a movable frame, driving mechanism mounted on said frame, a motor, and operative connection between said motor and said driving mechanism, said connection including magnetic and friction clutches adapted to hold the carriage against rebound when stopped, substantially as described.

3. In a spacing-table carriage, the combination of a frame, a motor mounted on said frame, driving mechanism, and a clutch between said motor and said driving mechanism, said clutch being effective to hold the said carriage against rebound when stopped, substantially as described.

4. A motor operated spacing-table carriage, provided with a locking mechanism, a magnetic clutch affording a yielding driving connection, an operating circuit for said clutch, and means effective upon the operation of said locking mechanism for breaking said clutch operating circuit, substantially as described.

5. In a spacing table carriage, the combination with a movable frame, a motor, and a driving mechanism, of a double yielding connection between said motor and said driving mechanism, said connection consisting of a rotatable shaft, a sleeve rotatable upon said shaft and directly connected to said motor, a magnetic coil secured to said sleeve, a second sleeve rotatable upon said shaft and extending within the magnetized field of said magnetic coil, a series of disks secured to said second named sleeve, and a second series of disks secured to said shaft and alternately disposed with relation to said first named series, substantially as described.

6. In a spacing table carriage, the combination with a movable frame, driving mechanism mounted on said frame, and a motor, of operative driving connection between said motor and said driving mechanism, said connection including a movable member effective by its movement after the stopping of the carriage to prevent any backward movement thereof, substantially as described.

7. In a spacing table carriage, the combination with a movable frame, a motor, and a driving mechanism, of operative driving connection between said motor and said driving mechanism, said driving connection consisting of a magnetic clutch having one member thereof connected to said motor, a friction clutch having one member thereof connected to said driving mechanism, and the second member of the said clutches united to move together, substantially as described.

8. In a spacing-table carriage, the combination with a motor driven frame and a locking mechanism therefor, of a circuit-breaker controlling a tool-operating circuit and normally held in circuit breaking position but effective on and by the locking of the said carriage to close the said tool-operating circuit, and a second circuit breaker normally completing a carriage-operating circuit but effective on and by the locking

of the said carriage to break the said last-named circuit, substantially as described.

9. In a spacing table carriage, the combination with a motor driven frame, and a locking mechanism therefor, of a circuit breaker normally completing a carriage-operating circuit, said circuit breaker effective upon the operation of said locking mechanism to break said carriage-operating circuit, and means effective after the releasing of said locking mechanism to bring said circuit breaker to its normal operative position, substantially as described.

10. The combination with a spacing table, and a series of stop elements, of a carriage movable with relation to the said table and adapted to stop at predetermined intervals, means including a rotatable shaft for driving the said carriage, carriage propelling mechanism operative to rotate the said shaft, and a member normally rotating with the said shaft, said member continuing its rotation and exerting by its momentum a torque upon the said shaft after the arrest thereof.

11. In a spacing table machine, a carriage, driving mechanism borne by the carriage, a motor borne by said carriage, an electric clutch borne by said carriage through which the power of the motor is imparted to the driving mechanism, an electric circuit connected with said clutch, a circuit make-and-break device in said circuit, a stop immovable with respect to said carriage, means operative on engagement of said carriage with said stop to open said make-and-break device.

12. The combination of a movable carriage, means for driving said carriage, a series of stop elements, means for engaging said stop elements and coöperating therewith to stop said carriage and means effective upon the stopping of said carriage for holding said stop-engaging means firmly against said stops.

In testimony whereof I have hereunto set my hand.

GEORGE PAUL THOMAS.

Witnesses:

PAUL N. CRITCHLOW,

BEATRICE FITZGERALD.