No. 841,455. PATENTED JAN. 15, 1907

W. SCHARNWEBER

VENTILATOR.

APPLICATION FILED JULY 5, 1906.

Fig. 1.

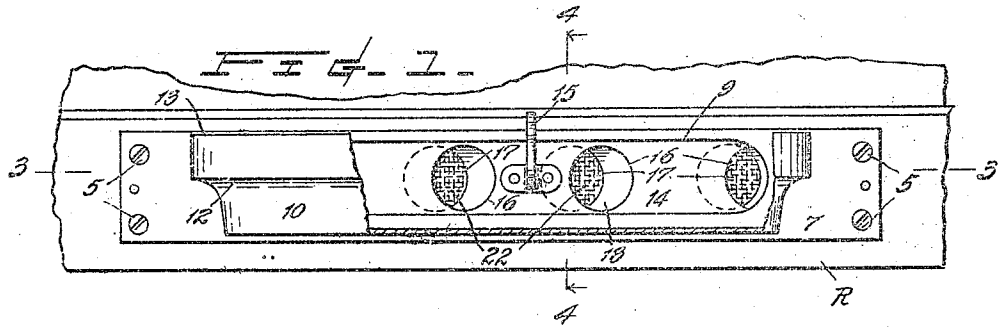

Fig. 2.

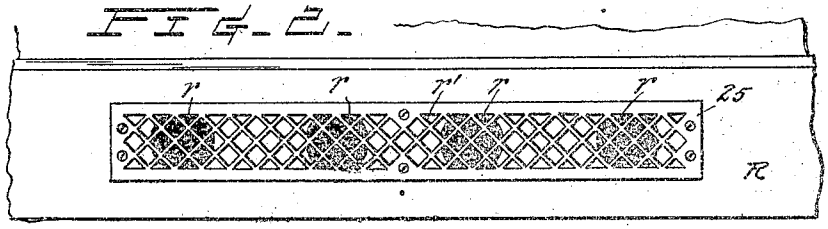

Fig. 3.

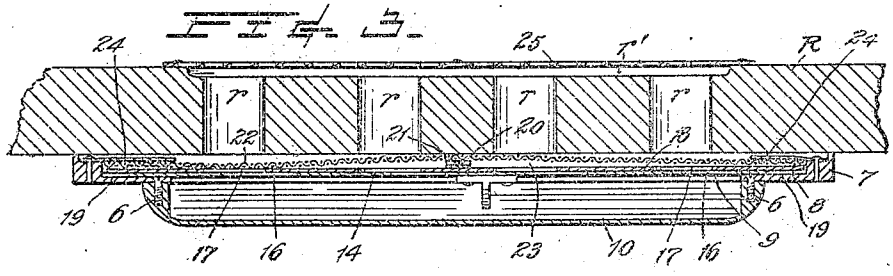

Fig. 4.

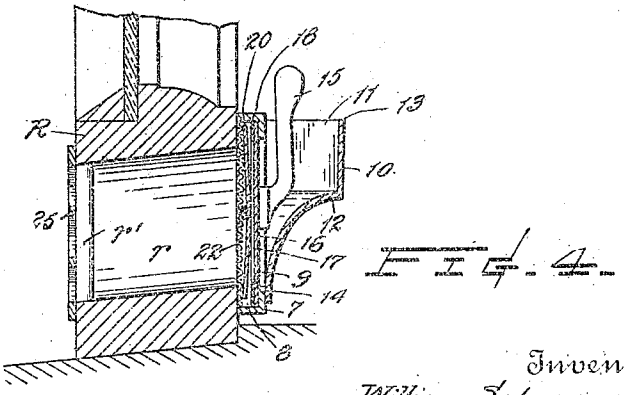

Witnesses
Horace Barnes.
Laurence M. Loeb

Inventor
William Scharnweber
By his Attorney
Pierce Barnes

UNITED STATES PATENT OFFICE.

WILLIAM SCHARNWEBER, OF SEATTLE, WASHINGTON.

VENTILATOR.

No. 841,455. Specification of Letters Patent. Patented Jan. 15, 1907.

Application filed July 5, 1906. Serial No. 324,902.

To all whom it may concern:

Be it known that I, WILLIAM SCHARNWEBER, a citizen of the United States, residing at Seattle, in the county of King and State of Washington, have invented certain new and useful Improvements in Ventilators, of which the following is a specification, reference being had therein to the accompanying drawings, in which—

Figure 1 is a front elevation, partly broken away, of a device embodying my invention and shown attached to the lower rail of a window-sash; Fig. 2, an outside elevation of the sash-rail with the foraminous covering-plate thereon; Figs. 3 and 4, horizontal and vertical sections taken through lines 3 3 and 4 4, respectively, of Fig. 1.

The invention relates to ventilators, and specifically to an improvement in the ventilator shown and described in United States Patent No. 542,837, issued to me July 16, 1895; and the object of the improvement is to perfect the same by rendering it more efficient in operation, while simplifying the construction and reducing the cost of manufacture.

With this in view the invention consists in the peculiar adaptation and combination of parts, which will be described hereinafter with reference to the said drawings.

The invention comprises a casing which is adapted to be secured, as by screws 5, to the inside of the bottom rail R of a window-sash or in other suitable places, and for convenience in manufacturing is desirably made of two parts which are rigidly secured to each other by fastenings, such as by screws 6. One of these casing parts 7 is in the form of a plate with a depression or cavity 8 at its rear which extends almost the entire length thereof and has an opening 9 of lesser length, while the other part 10 is formed to protrude forwardly and is open at the back to make communication between the opening 9 and an opening 11 at the top, which directs the fresh entering air in an upwardly direction. The casing part 10 is formed with a concave lower portion to provide a shoulder 12 to furnish a finger-gripping surface, whereby when the thumbs are caught over the top edge 13 of the part the window-sash may be most conveniently raised or lowered.

Positioned at the front of the cavity 8 and of less length than the same is a thin sheet of metal 14, which will be hereinafter denominated as the "shutter" and is provided with a handle 15, with which it is moved by finger-pressure from side to side, as desired, to cause the apertures 16 thereof to register with correspondingly-disposed apertures 17 of a stationary partition-plate 18 when the shutter is brought to the extreme end of its travel in one direction or be masked by the imperforate portions thereof when moved to the opposite end of its travel. The partition-plate is of a length slightly less than the said cavity in which it is positioned and is rigidly held against the shutter and the latter against the marginal edges 19 of the casing part 7 by a spring 20, which is connected to the partition centrally of its length by a rivet 21. This spring also serves to press a screen 22, preferably of wire-gauze, against the opposing face of the sash-rail R and leave a space 23 intervening the gauze and the partition for the more perfect distribution of the air to the various apertures of the latter. The ends of the gauze and the two said plates are retained in the ends of the casing-cavity by spring-metal plate 24, provided at and secured to each end of the part 7, thus enabling all of the aforedescribed members of the device being retained together as a single piece and in their proper relations and making it convenient for attachment to the window.

The sash-rail R is bored with a number of holes *r*, having their axes desirably inclined downward toward the outside and are communicatively connected at their outer ends by a horizontally-arranged channel *r'*, as shown in Figs. 3 and 4. A perforated plate 25 is preferably employed to cover the holes of the sash-rail at the outside in order to improve the appearance when viewed from that direction.

The advantages of the present invention reside principally in the simplicity of the device and the suitability of the various parts to their respective offices. The air is free to enter a room in direct lines and thence diverted upwardly to create the proper current for effective ventilation, and while the shutter and the fixed partition make a nice working fit with each other the gauze is so deflected as to permit the air to freely be admitted to all of the plate-apertures from any of the rail-holes. Furthermore, by the employment of the channel connections between the holes in the rails fewer are required and of less size than would otherwise be necessitated to furnish sufficient conduits for the air, thereby allowing not only of the appa-

ratus being made of relatively small dimensions, but likewise not materially weakening the sash-rail. A still further advantage is the provision of a sash-lift through the utilization of the peculiarly-formed projecting part of the casing.

Having thus described my invention, what I claim, and desire to secure by Letters Patent, is—

1. In a ventilator, the combination of a casing having a recess at its back and a forwardly-projecting portion open at its top and communicatively connected with said recess, a stationary partition within the recess and provided with a series of apertures, a slidable shutter placed in juxtaposition with the partition and provided with a series of apertures spaced to register with those of the partition when the shutter is correspondingly moved, a screen secured in said recess by devices attached to the ends of the casing, said devices, and a spring positioned between the screen and the partition.

2. The combination with a sash-rail, of a perforated outer covering-plate, of a ventilator having a cavity therein which is connected by an elongated hole with the open top inner projecting portion provided with an external concave wall, an apertured shutter slidably mounted within said cavity and provided with a handle for effecting the movements thereof, said handle, a stationary partition within said cavity and provided with apertures spaced so as to be registerable with those of the shutter when the latter is brought into a certain position, a screen positioned within the cavity of the casing, a spring intermediate of and acting against the screen and the partition centrally of their length and respectively pressing them against the sash-rail and the shutter, and means to reliably secure the ends of the screen to the casing and cause them to bear against the partition.

3. The combination with a sash-rail, of a perforated outer covering-plate, of a ventilator comprising a two-part casing which are fixedly connected together and having a cavity therein which is connected by an elongated hole with the open-top inner projecting portion provided with an external concave wall, an apertured shutter slidably mounted within said cavity and provided with a handle for effecting the movements thereof, said handle, a stationary partition within said cavity and provided with apertures spaced so as to be registerable with those of the shutter when the latter is brought into a certain position, a screen positioned within the cavity of the casing, a spring intermediate of and acting against the screen and the partition centrally of their length, and respectively pressing them against the sash-rail and the shutter, and means to reliably secure the ends of the screen to the casing and cause them to bear against the partition.

4. The combination with a sash-rail provided with a plurality of axially-inclined holes which are connected at their lower outer ends by a longitudinally-arranged channel, and a perforated outer covering-plate therefor, of a ventilator comprising a casing having a cavity therein which is connected by an elongated hole with the open-top inner projecting portion provided with an external concave wall, an apertured shutter slidably mounted within said cavity and provided with a handle for effecting the movements thereof, said handle, a stationary partition within said cavity and provided with apertures spaced so as to be registerable with those of the shutter when the latter is brought into a certain position, a screen positioned within the cavity of the casing, a spring intermediate of and acting against the screen and the partition centrally of their lengths and respectively pressing them against the sash-rail and the shutter, and means to reliably secure the ends of the screen to the casing and cause them to bear against the partition.

5. The combination with a sash-rail provided with a plurality of axially-inclined holes which are connected at their lower outer ends by a longitudinally-arranged channel, and a perforated outer covering-plate therefor, of a ventilator comprising a two-part casing which is fixedly connected together and having a cavity therein which is connected by an elongated hole with the open-top inner projecting portion provided with an external concave wall, an apertured shutter slidably mounted within said cavity and provided with a handle for effecting the movements thereof, said handle, a stationary partition within said cavity and provided with apertures spaced so as to be registerable with those of the shutter when the latter is brought into a certain position, a screen positioned within the cavity of the casing, a spring intermediate of and acting against the screen and the partition centrally of their lengths and respectively pressing them against the sash-rail and the shutter, and means to reliably secure the ends of the screen to the casing and cause them to bear against the partition.

In testimony whereof I affix my signature in presence of two witnesses.

WILLIAM SCHARNWEBER.

Witnesses:

PIERRE BARNES,

JOHN SMITH.