H. COUILLARD.

FILM CEMENT HOLDER AND SPREADER.

APPLICATION FILED OCT. 28, 1920.

1,401,318. Patented Dec. 27, 1921.

Fig. 1.

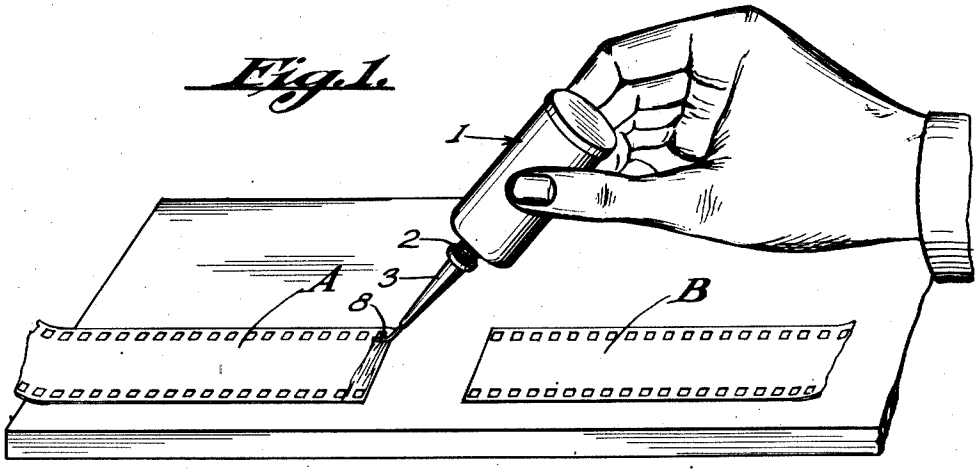



Fig. 2.

Fig. 3.

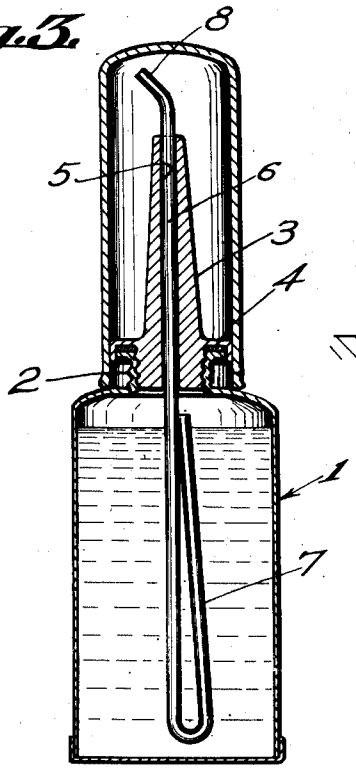

Fig. 4.

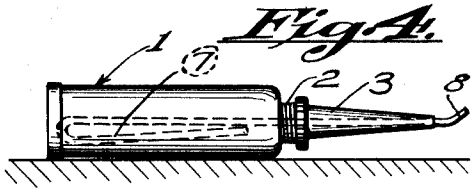

Inventor:
HENRI COUILLARD.
BY Hazard & Miller
Attorneys.

UNITED STATES PATENT OFFICE.

ALVIN E. BUCHENBERG, OF TOLEDO, OHIO, ASSIGNOR TO INDUSTRIAL RESEARCH CORPORATION, OF TOLEDO, OHIO, A CORPORATION OF DELAWARE.

ENGINE STARTER.

1,413,318. Specification of Letters Patent. Patented Apr. 18, 1922.

Application filed April 14, 1919. Serial No. 289,951.

To all whom it may concern:

Be it known that I, ALVIN E. BUCHENBERG, a citizen of the United States, residing at Toledo, in the county of Lucas and State of Ohio, have invented certain new and useful Improvements in Engine Starters, of which I declare the following to be a full, clear, and exact description.

This invention relates to improvements in starters for internal combustion engines, and consists principally in the employment of an electro-magnet for carrying the movable pinion which engages the fly-wheel, said electro-magnet when energized moving toward the fly-wheel, which is composed of magnetic material.

One of the objects of the invention is the provision of means for automatically engaging and disengaging the starting gears, when the driving motor is started and stopped.

Another object of the invention is the provision of means for accomplishing the gear shifting operation electro-magnetically.

Another object is the provision of a single means for starting the driving motor, and for completing the circuit of the electro-magnet, which means may be merely a switch where an electric motor is used for starting.

Still another object is the mounting of the driving pinion in an intermediate position upon a lever which is pivoted at one end, and has at least one pole of the electro-magnet at its other end, whereby the pull of the magnet at the end of the lever produces a proportionately stronger effect at the point of the pinion mounting.

Other objects, and objects relating to details of construction, and economies of manufacture will appear as I proceed with the description of that embodiment of the invention, which, for the purposes of the present application, I have illustrated in the accompanying drawings, in which:

Figure I is a top plan view partly in cross section, showing an embodiment of my invention, a fragment only of the engine fly-wheel being illustrated.

Fig. II is an end view of the invention as seen from the left in Fig. I.

Fig. III is a cross section taken substantially on the line III—III, Fig. I, and looking in the direction of the arrows.

Fig. IV is a diagram showing the preferred arrangement of electrical apparatus and connections.

Similar reference characters refer to like parts in each of the views.

In the drawing, 10 represents an electric motor of the series wound type, the armature shaft 11 having fixed thereupon a pinion 12. The two arms of a yoke 13 straddle the pinion 12, and these arms are drilled out to receive loosely the shaft 11, which, therefore, forms a pivot for said yoke. The latter has rotatably mounted therein a second shaft 14, upon which is fixed a pinion 15 meshing with the pinion 12. The shaft 14 also has fixed thereto a pinion 16 which rotates in a slot 17, formed in one arm of the yoke 13. The teeth of the pinion 16 are adapted to mesh with teeth 27 on the engine fly-wheel 18.

That arm of the yoke 13 in which the pinion 16 is mounted, constitutes an electro-magnet. Near its ends pole shoes 19 extend toward the fly-wheel 18, being shaped upon their lower surfaces to conform as nearly as possible to the shape of the adjacent surfaces of the fly-wheel. The magnet coils 20 are wound around the pole shoes 19. As diagrammatically shown in Fig. IV, these coils 20 may be arranged in series with the motor 10, its field winding 21, a suitable source of electric current, such as a storage battery 22, and a switch 23. When the switch 23 is closed a current passes through the motor and through the coils 20 of the electro-magnet. As the latter becomes energized it moves toward the fly-wheel, causing the pinion 16 to engage with the teeth 27. In order to retract the pinion 16 when current has ceased to flow through the coils 20, a tension spring 24 may be attached to the free end of the yoke 13, the opposite end of the spring being secured to any convenient support.

Instead of the pinion 16, a drive wheel of some other type may be employed if desired, and, similarly, the teeth 27 upon the fly-wheel may be omitted altogether, or, if desired, some other type of teeth may be used. Furthermore, the number of gears or pinions in the yoke 13 may be decreased or increased without departing from the spirit of my invention.

I am aware that the particular embodiment of my invention above described, and illustrated in the accompanying drawings, is susceptible of considerable variation

without departing from the spirit thereof, and therefore I desire to claim my invention broadly, as well as specifically, as indicated by the appended claims.

I claim as my invention:

1. In combination with the fly-wheel of an internal combustion engine, said fly-wheel being built of magnetic material and provided with gear teeth along its periphery, a motor, a shaft therefor, an electro-magnet radially pivoted upon said shaft and capable of a limited amount of swinging motion thereon towards and away from said fly-wheel, the poles of said magnet facing said fly-wheel and in juxtaposition therewith, a pinion carried by said magnet and driven from said motor shaft, said electro-magnet when energized being drawn towards the said fly-wheel until said pinion meshes with the teeth on the fly-wheel.

2. In combination with the fly-wheel of an internal combustion engine, said fly-wheel being built of magnetic material and provided with gear teeth along its periphery, an electric motor, an electro-magnet pivotally mounted concentric to the axis of said motor to have a limited swinging movement about that axis towards and away from said fly-wheel, the poles of said magnet facing said fly-wheel and in juxtaposition therewith, a source of electric current, electrical connections therefrom to said motor and electro-magnet, a pinion carried by said electro-magnet and driven by said motor, and means for completing said electrical connections.

3. In combination with the fly-wheel of an internal combustion engine, said fly-wheel being built of magnetic material and provided with gear teeth along its periphery, a motor, an electro-magnet pivotally mounted concentric to the axis of said motor, the poles of which face said fly-wheel and lie close thereto, a pinion mounted between the pivot of the electro-magnet and the outer one of said poles, and a driving connection between said pinion and said motor, said electro-magnet when energized being swung towards said fly-wheel about said axis until the teeth of the fly-wheel are engaged by said pinion.

4. In a drive mechanism, the combination of a driven member formed of magnetic material; a motor shaft; an electro-magnet mounted on the shaft for radial pivotal movement thereabout; a gear carried by the electro-magnet, and operatively connected to the shaft; and means for magnetically energizing the electro-magnet and a portion of said driven member.

5. In a drive mechanism, the combination of a driven member formed of magnetic material; a motor shaft; an electro-magnet mounted on the shaft for radial pivotal movement thereabout; a gear carried by the electro-magnet and movable into engagement with the driven member; said electro-magnet being positioned in juxtaposition with the engine member but non-contractible therewith.

In testimony whereof, I affix my signature.

ALVIN E. BUCHENBERG.