(No Model.) 2 Sheets—Sheet 1.

T. M. MILTON.

SMOOTHING MACHINE.

No. 456,366. Patented July 21, 1891.

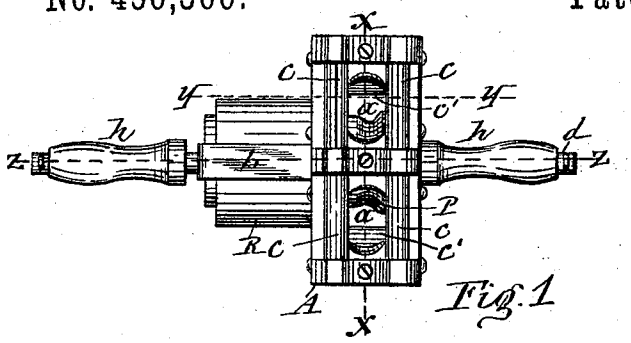

Fig. 1

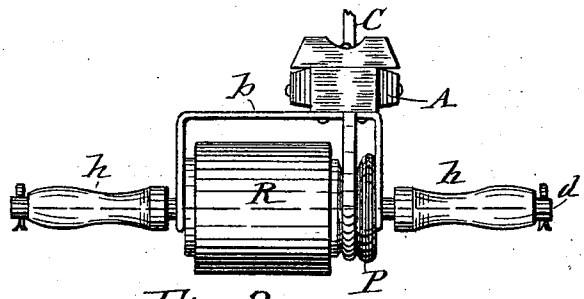

Fig. 2

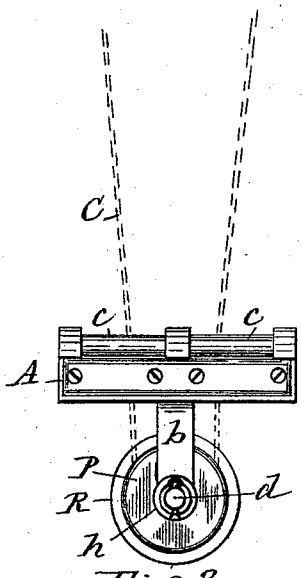

Fig. 3

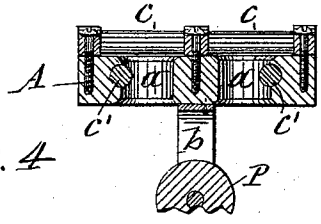

Fig. 4

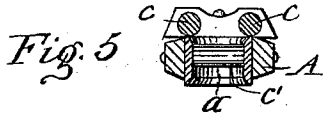

Fig. 5

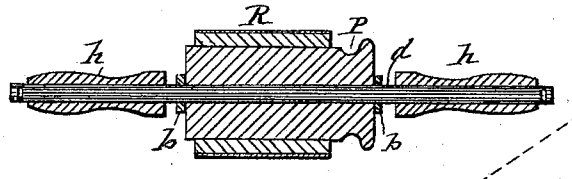

Fig. 6

Fig. 7

WITNESSES:

A. F. Walz

Mark W. Dewey

INVENTOR:

Thomas M. Milton

By Duell, Laass & Duell

his ATTORNEYS

THE NORRIS PETERS CO., PHOTO-LITHO., WASHINGTON, D. C.

(No Model.)

2 Sheets—Sheet 2.

T. M. MILTON.

SMOOTHING MACHINE.

No. 456,366. Patented July 21, 1891.

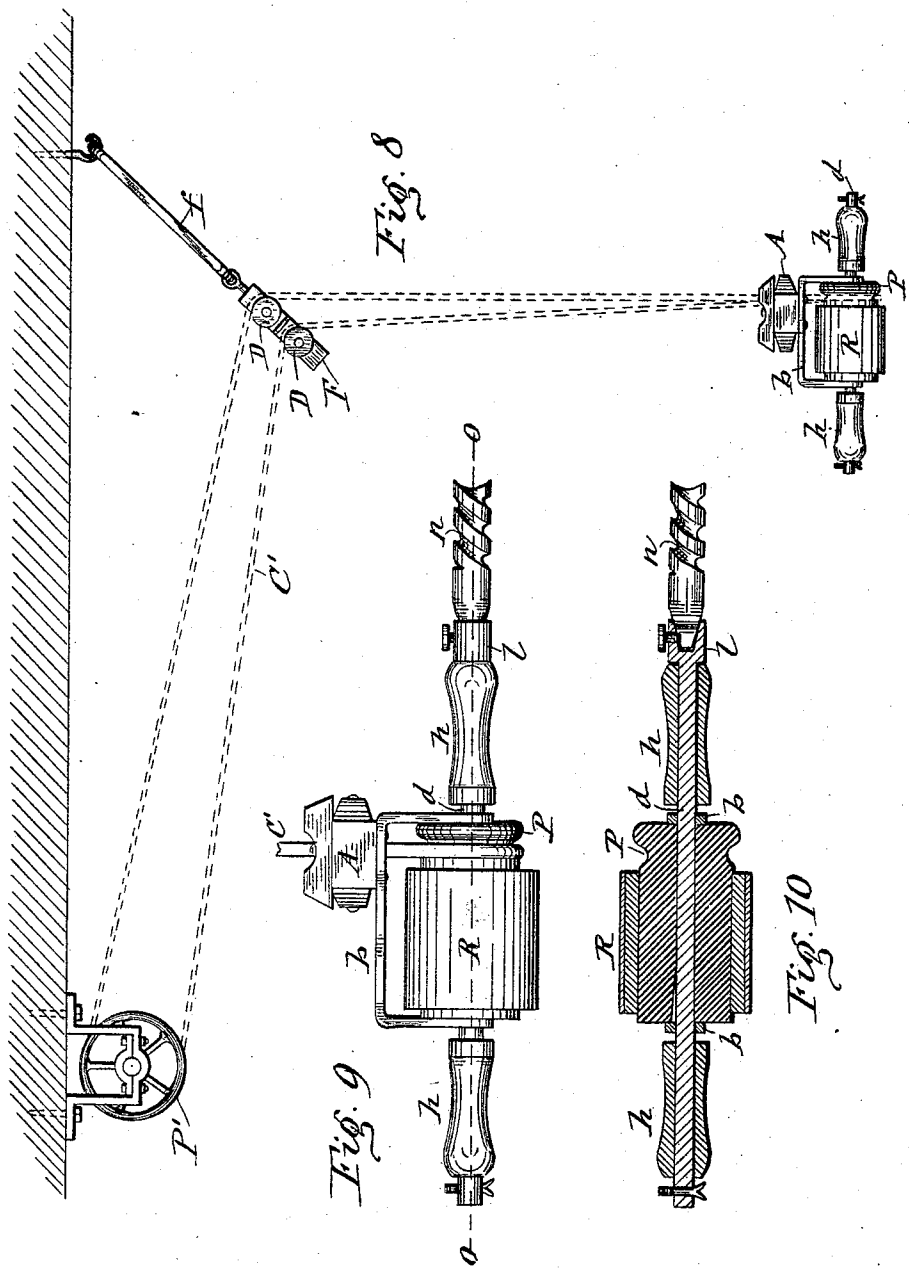

WITNESSES:

A. F. Walz

Mark W. Dewey

INVENTOR:

Thomas M. Milton

By Dull, Laass & Dull

his ATTORNEYS.

THE NORRIS PETERS CO., PHOTO-LITHO., WASHINGTON, D. C.

UNITED STATES PATENT OFFICE.

THOMAS M. MILTON, OF BREWERTON, NEW YORK, ASSIGNOR OF ONE-HALF TO LAKE C. PIERCE, OF SAME PLACE.

SMOOTHING-MACHINE.

SPECIFICATION forming part of Letters Patent No. 456,366, dated July 21, 1891.

Application filed March 2, 1891. Serial No. 383,415. (No model.)

To all whom it may concern:

Be it known that I, THOMAS M. MILTON, of Brewerton, in the county of Onondaga, in the State of New York, have invented new and useful Improvements in Smoothing-Machines, of which the following, taken in connection with the accompanying drawings, is a full, clear, and exact description.

The object of this invention is to provide an abrading and smoothing machine which shall be universally movable to various positions and distances from the driving-pulleys, so as to adapt it to be operated in either vertical or horizontal or straight or curved surfaces and on various parts of the object to be smoothed without necessitating a change in the position of said object; and to that end my invention consists in the novel construction and combination of parts, as hereinafter more fully described, and specifically set forth in the claims.

In the annexed drawings, Figure 1 is a top plan view of a smoothing-machine embodying my invention. Figs. 2 and 3 are respectively side and end views of said machine. Figs. 4, 5, and 6 are sectional views, respectively, on lines *x x*, *y y*, and *z z*, Fig. 1. Fig. 7 is a view illustrating the various positions in which the machine is adapted to be operated. Figs. 8 and 9 illustrate modifications of my invention; and Fig. 10 is a longitudinal section on line *o o*, Fig. 9.

Similar letters of reference indicate corresponding parts.

R represents the portable abrading or smoothing roller, which is faced with either sand-paper or emery-cloth or other suitable material. On the end of this roller is a pulley P, which is either rigidly attached thereto or formed integral therewith. Said roller and its pulley I mount loosely on a shaft *d*, which is extended through a metallic yoke *b*, and to the ends of said shaft are secured suitable handles *h h*, by which to carry and guide the roller and its pulley.

In order to maintain the driving-belt on the pulley P, I attach the yoke *b* to the under side of a frame A, which is formed with guide-openings *a a*, through which the belt passes, and in order to guard against undue friction I extend along opposite sides of the guide-openings and across opposite ends of the same guide-rollers *c c'*, pivoted to said frame. The pulley P, I connect with its driving-pulley P' by an expansible and contractible driving-belt C, preferably composed of suitable rubber, which allows the described smoothing-machine to be carried various distances from the driving-pulley and retains a sufficient tension on the belt to transmit motion from the driving-pulley to the pulley P. I do not, however, wish to be limited to the employment of a driving-belt composed of rubber or other expansible and contractible material, inasmuch as the free movement of the instrument with the pulley P to various positions and distances from the driving-pulley can be afforded by a non-elastic driving-belt C', running on intermediate sheaves D D, pivoted to a hanger F, which is suspended from the ceiling by a longitudinally expansible and contractible rubber band *f*, as shown in Fig. 8 of the drawings, or a spiral spring may be employed in lieu of the rubber band.

The frame A, with its before-described guides, serves to retain the belt on the pulley P while placing the machine in different angles, as represented in Fig. 7 of the drawings, and thus allows the machine to be operated on various parts of the object to be smoothed.

By rigidly attaching the pulley P to its shaft *d* and applying the handles *h h* loosely to said shaft and forming the end of the latter with a socket *l* or other suitable holder for the attachment of an auger or drill *n*, as shown in Figs. 9 and 10 of the drawings, my invention may be employed for operating said auger or drill.

Having described my invention, what I claim as new, and desire to secure by Letters Patent, is—

1. In combination with the driving pulley or drum, the frame A, formed with guides *a a*, the yoke *b*, attached to said frame, the roller R and pulley P, rigidly united and pivoted to the yoke, and a belt connecting the two pulleys, as set forth.

2. In combination with the driving pulley or drum, the frame A, formed with the guide-openings *a a*, guide-rollers *c c'*, pivoted to the

frame, the yoke *b*, attached to said frame, the roller R and pulley P, rigidly united and pivoted to the yoke, and an expansible and contractible driving-belt connecting the pulley P with the driving-pulley, as set forth and shown.

3. In combination with the driving-pulley, the frame A, formed with guide-openings *a a*, the yoke *b*, rigidly attached to said frame, the shaft *d*, extending through the yoke, the roller R and pulley P, rigidly united and mounted loosely on the shaft within the yoke, handles *h h* on the ends of said shaft, and an expansible and contractible belt *l*, connecting the pulley P with the driving-pulley, substantially as described and shown.

In testimony whereof I have hereunto signed my name this 24th day of February, 1891.

THOMAS M. MILTON. [L. S.]

Witnesses:
MARK W. DEWEY,
W. M. PIERCE.