O. H. NONNENBRUCH.

PROCESS FOR THE SEPARATION OF LIQUIDS.

APPLICATION FILED AUG. 24, 1915.

1,170,558. Patented Feb. 8, 1916.

Fig. 1.

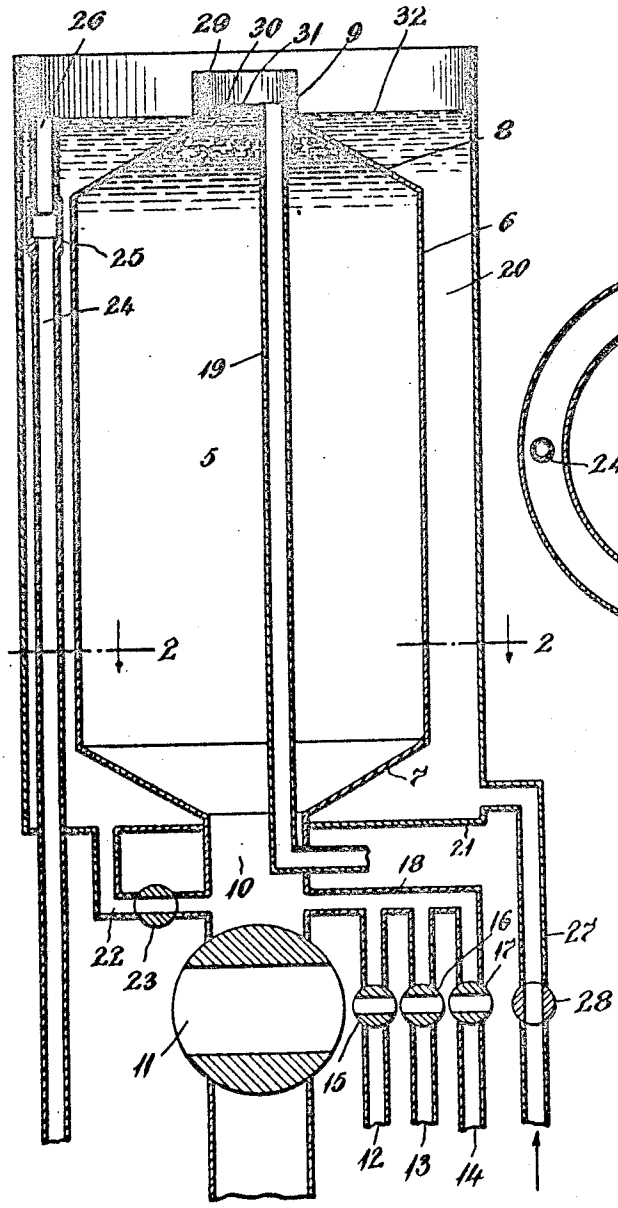


Fig. 2.

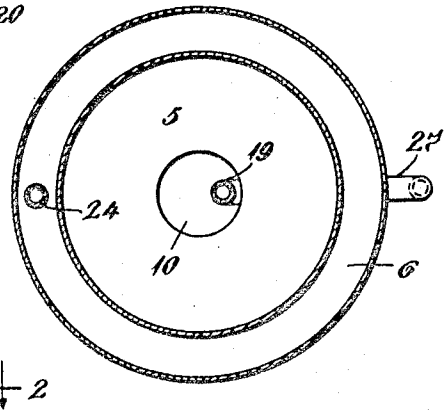


Inventor
Otto Heinrich Nonnenbruch
By his Attorney
Hiram Sherman

THE COLUMBIA PLANOGRAPH CO., WASHINGTON, D. C.

# UNITED STATES PATENT OFFICE.

OTTO HEINRICH NONNENBRUCH, OF NEW ROCHELLE, NEW YORK, ASSIGNOR TO DE LA VERGNE MACHINE CO., A CORPORATION OF NEW YORK.

## PROCESS FOR THE SEPARATION OF LIQUIDS.

1,170,558. Specification of Letters Patent. Patented Feb. 8, 1916.

Original application filed July 8, 1915, Serial No. 38,754. Divided and this application filed August 24, 1915. Serial No. 47,046.

*To all whom it may concern:*

Be it known that I, OTTO HEINRICH NONNENBRUCH, a citizen of Germany, and a resident of New Rochelle, in the county of Westchester and State of New York, have invented certain new and useful Improvements in Processes for the Separation of Liquids, of which the following is a specification, this application being a divisional application of application Serial Number 38,754, filed July 8, 1915.

My invention relates to a method for separating liquids of different specific gravities, and refer particularly to the process and device whereby such separation may be automatically interrupted at any predetermined period of separation.

One object of my invention is a means for effectively and economically separating two or more liquids of different specific gravities.

Another object of my invention is a means whereby the separation of liquids of different specific gravities may be carried to any desired degree of completeness.

Another object of my invention is a means whereby the separation of liquids of different specific gravities may be carried automatically to any degree of completion and the further separation automatically interrupted.

Another object of my invention is a means whereby oil may be economically and effectively separated from water and the separation automatically interrupted when any predetermined proportion of oil has been removed from the water.

Other objects of my invention will be evident upon a consideration of my specification and drawings.

My invention is suitable for application to those mixtures of liquids of different specific gravities which are not soluble in each other and hence, when allowed to rest, will separate into layers, the specific gravities of the different layers increasing downwardly. The usually employed methods of separating these layers one from the other is to decant the upper layer or to draw off the lower layer, the decantation or withdrawal being interrupted when all of the liquid of one specific gravity has been removed. This process requires the constant attention of the operator and demands the greatest care, in order that the one liquid may be completely recovered without admixture with the liquid of the next layer. In the use of opaque receptacles, such as iron, wood, etc., it is impossible to watch the condition of the procedure and there is no assurance that one layer has been completely withdrawn, until a portion of the next layer makes its appearance, and hence under these conditions a complete separation without admixture is impossible. It is evident that during this process the operator must be constantly employed in order that he may interrupt the separation. Further, it is impossible to employ this method when it is desired to retain a certain proportion of one liquid within the receptacle, in order to admix it with the next layer of liquid, as there is no means of ascertaining the amount of liquid not withdrawn.

My invention overcomes all of the above and other difficulties incident to this method of separation, and presents a method whereby any desired proportion of one or more of the layers of liquids may be withdrawn, and the operation interrupted automatically at any desired point without the attention of the operator.

My invention comprises broadly the separation of layers of liquids of different specific gravities by means of another liquid, the separation being interrupted automatically at any predetermined point of separation.

In the accompanying drawings, forming a part of this specification and illustrating one form of a device capable of accomplishing the object of this invention, similar parts are represented by similar numbers.

Figure 1 is a vertical cross-section in diagrammatical form of one form of the device. Fig. 2 is a cross-section through the line 2—2 of Fig. 1.

In the operation of engines, particularly of the oil consuming type, the introduced oil becomes impregnated with deleterious substances, such as carbon, grease, etc., rendering it unfit for re-use without purification. Numerous methods have been suggested for this purification, among which is the treatment of the impure oil with water and chemicals in order to separate the mixture into layers of oil, impurities and water, and the following example refers particularly to

this method of procedure, although it is evident that the process may be readily used in a corresponding manner for the separation of any liquids which possess the property of being deposited in layers, due to the difference in the specific gravities of the various ingredients of the mixture.

The liquid holding receptacle 5 is comprised of the cylindrical side 6, the inclined bottom 7 and the inclined top 8, the top 8 being inclined inwardly and then upwardly parallel to the side 6, forming the cylindrical top opening 9. The bottom 7 is connected to an outlet pipe 10 fitted with a valve 11. The outlet pipe 10 above valve 11 is connected to pipes 12, 13, 14, fitted respectively with valves 15, 16, 17 by means of pipe 18. An overflow pipe 19 extends from within the cylindrical neck 9 downwardly through the bottom opening 10 and outwardly to a proper reservoir. Surrounding the receptacle 5 is a second liquid holding receptacle open at the top, the bottom 21 being hermetically attached to outlet pipe 10. The bottom of receptacle 20 is connected to pipe 10 above valve 11 by means of pipe 22 carrying valve 23. An overflow pipe 24 extends from the upper portion of receptacle 20 downwardly through the bottom 21. The upper part of overflow pipe 24 is fitted with a nipple 25, fixedly attached thereto, the nipple 25 being threaded to a short pipe 26, the nipple being of such a length that pipe 26 may be raised or lowered to any desired position. A pipe 27 leads downwardly from the bottom portion of receptacle 20 and carries valve 28. Pipe 12 leads to an air compressing medium, pipe 13 to a supply of impure oil, pipe 14 to a supply of water, pipe 27 to a supply of water, pipe 24 to a drain, sewer or waste carrying system, pipe 10 to a drain, sewer or waste carrying system, and pipe 19 to an oil storage reservoir.

In operation the process is conducted as follows: Both of the receptacles 5 and 20 are empty and all the valves are closed. Valve 16 of pipe 13 is open and the proper amount of impure oil is introduced into receptacle 5 and the valve closed. A sufficient supply of fresh water is then introduced into receptacle 5 by opening valve 17 of pipe 14, and the valve closed, this amount of water being insufficient to cause the liquids to reach the opening of overflow pipe 19. Valve 28 of pipe 27 is then opened and retained in this position during the remainder of the operation, thus causing a supply of water of the proper temperature for the reaction to enter the receptacle 20 and overflow through overflow pipe 24 into a drain or sewer. The proper reagents are then introduced into receptacle 5 and the mixture agitated by means of air allowed to enter by opening valve 15 of pipe 12. When the mixture has been sufficiently agitated to allow of the completion of the reaction, valve 15 is closed and the mixture allowed to rest. The mixture finally separates itself into three layers, the upper one being composed of the pure oil, the bottom layer of water, while intermediate between the two is a layer carrying the impurities. When this condition has been reached, valve 23 of pipe 22 is opened, thus placing receptacles 5 and 20 into connection with each other, and the water entering receptacle 20 through pipe 27 will find its way into receptacle 5 through pipe 22, and thus cause the contents of receptacle 5 to rise, the upper portion of the liquid being carried off through overflow pipe 19, this process being continued until the pressure of liquids in receptacle 5 to the top of overflow pipe 19 is equal to the pressure of water in receptacle 20 to the top of overflow pipe 24. If both receptacles contain liquids of the same specific gravity, the height of the two columns of liquid in the two receptacles would necessarily be equal, but if the liquid in receptacle 5 is lighter than the liquid in receptacle 20, it is evident that the height of the column in receptacle 5 would be greater than that in receptacle 20 in order to produce the same pressure and cause an equilibrium between the two volumes of liquid. In carrying out the operations of the particular process under consideration, the rising of the liquids in receptacle 5 will cause the oil to gradually overflow through overflow pipe 19, and when all, or nearly all, of the oil has been removed, the liquids in reservoir 5 will still have a lower specific gravity than that of the water in receptacle 20, due to the presence of the oil or of the layer of impurities which is also lighter than water. At this point, the overflow of the liquids in receptacle 5 will be interrupted and the water will continue to be removed from receptacle 20 by means of the overflow pipe 24, as the top of overflow pipe 19 will be higher than that of overflow pipe 24. The length of overflow pipe 24 may be regulated to serve the purpose of the particular liquids treated in receptacle 5 and hence when valve 23 is opened the device needs no further attention, as the overflow of the liquids in receptacle 5 will cease automatically when it has reached the desired state of separation. Finally, the sludge or impurities and the water contained in receptacle 5 may be removed by closing valve 23 and opening valve 11 of pipe 10.

In the drawings, the liquids in receptacle 5 are shown as balanced with the liquid in receptacle 20, and the overflow through overflow pipe 19 interrupted when a small amount of purified oil 29, sludge 30 and water 31 still remain in receptacle 5, and it is evident that this remaining purified oil may be removed before the interruption of

the overflow by raising pipe 26 of overflow pipe 24, thus raising the level of water 32 in reservoir 20.

One important feature of this device is that, when a particular temperature is required to cause the reaction and separation of the various liquids in receptacle 5, it can be accomplished by introducing a liquid of the proper temperature into receptacle 20, allowing it to run continuously from the beginning of the operation until the final separation and removal of the various ingredients.

It is evident that all of the arrangements of receptacles and pipes, as illustrated in the drawings, may be changed from their form and condition as there shown, and this particular form is illustrated simply to show one form of a device capable of accomplishing the object of the invention.

I do not limit myself to the particular form, size, shape, number, or arrangement of parts of the device, nor to the particular liquids, nor to the relative specific gravities; as illustrated and described, all of which may be varied without going beyond the scope of my invention as described and claimed.

What is claimed, is:

1. The process of separating liquids of different specific gravities which comprises allowing the mixture of liquids to separate into layers, causing the removal of the desired liquids by means of an introduced liquid until the desired removal has been effected, and automatically interrupting the removal of the desired liquids without the interruption of the flow of the introduced liquid.

2. The process of separating liquids of different specific gravities which comprises allowing the mixture of liquids to separate into layers and then removing the layers from the mixture by means of the pressure of a liquid of greater specific gravity than that of the mixture, the removal being automatically interrupted when the pressure of the remaining mixture is equal to the pressure of the removing liquid, the flow of the removing liquid being uninterrupted.

3. The process of removing liquids which have separated into layers due to their different specific gravities which comprises forcing the layers upwardly by means of an introduced liquid of greater specific gravity than the liquids to be removed, and automatically interrupting the removal of the liquids when the pressure of the unremoved liquids is equal to the pressure of the removing liquid, the flow of the removing liquid being uninterrupted.

4. The process of removing oil from water which comprises allowing the oil to rise above the water, introducing a flow of water beneath the oil causing the removal of the oil through an overflow, and automatically interrupting the removal while allowing the flow of the water to continue.

5. The process of separating oil from a mixture of oil and water which comprises allowing the oil to rise above the water, introducing a flow of water beneath the oil causing the removal of some of the oil from the mixture, and automatically interrupting the removal when the pressure of the introduced water is equal to the pressure of the remaining oil and water, the flow of the introduced water being uninterrupted.

6. The process of separating liquids of different specific gravities which comprises allowing the mixture of liquids to separate into layers within a receptacle having an overflow outlet, connecting the lower part of this receptacle with a second receptacle having an overflow outlet, and introducing a liquid into the first receptacle below the upper layer of the separated liquids in such a manner as to allow the upper layer of separated liquid to overflow through the outlet until the pressure of the unseparated liquids is equal to the pressure of the liquid within the second receptacle and the overflow of the separated liquids is interrupted and the overflow of the introduced liquid in the second receptacle is continued.

7. The process of separating liquids of different specific gravities which comprises allowing the mixture of liquids to separate into layers within a receptacle having an overflow outlet, connecting the lower part of this receptacle with a second receptacle having an overflow outlet below that of the overflow outlet of the first receptacle, and introducing a liquid into the first receptacle below the layers of liquids to be removed, said introduced liquid being of greater specific gravity than that of the liquids to be removed, in such a manner as to allow the desired layers of liquids to overflow through the outlet until the pressure of the unseparated liquids is equal to the pressure of the liquid within the second receptacle and the overflow of the separated liquids is interrupted and the overflow of the liquid in the second receptacle is allowed to continue.

Signed at New York city in the county of Bronx and State of New York, this 19th day of August, 1915.

OTTO HEINRICH NONNENBRUCH.

Witnesses:
M. J. POWELL,
E. J. KÄTZ.

**Copies of this patent may be obtained for five cents each, by addressing the "Commissioner of Patents, Washington, D. C."**