Dec. 31, 1940. J. E. V. EDSTROM 2,227,302

VACUUM CLEANER

Filed Oct. 14, 1937

Fig. 1.

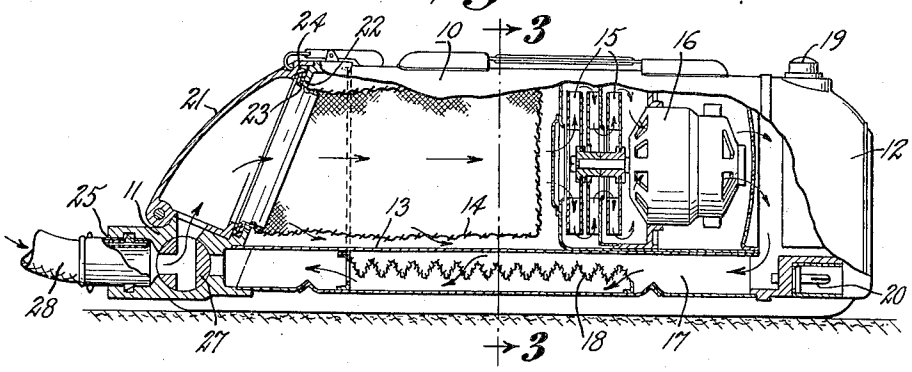

Fig. 2.

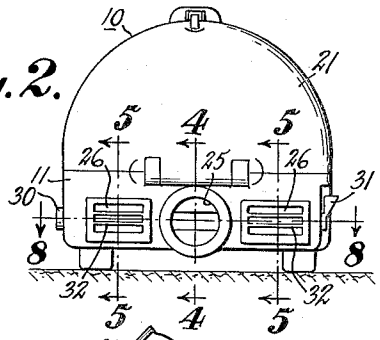

Fig. 3.

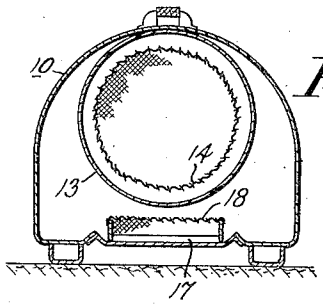

Fig. 4.

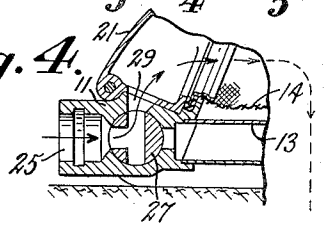

Fig. 6.

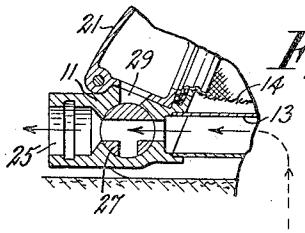

Fig. 5.

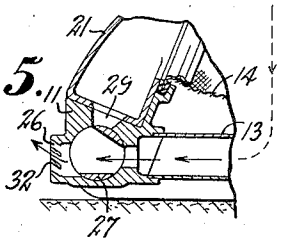

Fig. 7.

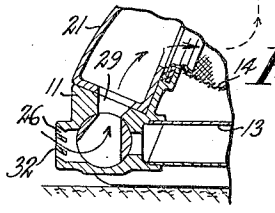

Fig. 8.

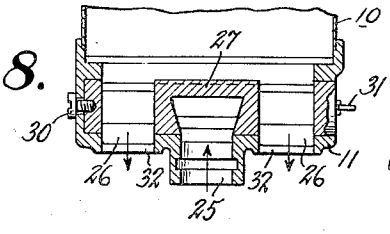

INVENTOR
Johan Eric Valdemar Edstrom
BY
Arthur G. Brangley
His ATTORNEY

Patented Dec. 31, 1940

2,227,302

UNITED STATES PATENT OFFICE

2,227,302

VACUUM CLEANER

Johan Eric Valdemar Edstrom, Stockholm, Sweden, assignor to Electrolux Corporation, Dover, Del., a corporation of Delaware

Application October 14, 1937, Serial No. 168,888
In Germany October 19, 1936

6 Claims. (Cl. 15—14)

My invention relates to a vacuum cleaner and more particularly to a vacuum cleaner in which the inlet and outlet openings are located at the same end of the cleaner.

An object of my invention is to eliminate the necessity of disconnecting the hose from the cleaner when changing from suction to blower action.

A further object of my invention is to provide an improved vacuum cleaner of simplified operation.

What I consider to be novel and my invention may be better understood by reference to the following specification and claims when considered in connection with the accompanying drawing, in which

Fig. 1 is a side view partly in section of my improved vacuum cleaner;

Fig. 2 is a front end view of the cleaner;

Fig. 3 is a sectional view along line 3—3 of Fig. 1;

Fig. 4 is a detail sectional view along line 4—4 of Fig. 2;

Fig. 5 is a detail view along line 5—5 of Fig. 2;

Fig. 6 is a view similar to Fig. 4 with the control member in a different position;

Fig. 7 is a view similar to Fig. 5 with the control member in a different position; and

Fig. 8 is a sectional view along line 8—8 of Fig. 2.

Referring to the drawing, 10 indicates a vacuum cleaner with a front end cover 11 and a rear end cover 12. Within casing 10, a cylindrical housing 13 is located in which is carried a dust separator or bag 14, a fan 15, and a motor 16. Below the housing 13, a chamber 17 is provided forming an outlet or discharge passage communicating with the open end of housing 13 adjacent rear end cover 12. To catch any fine dust which may pass through the dust bag 14 and any carbon dust from the motor brushes, a filter 18 is located in the discharge passage formed by chamber 17. In the read end cover 12, a switch 19 is mounted for controlling the operation of motor 16. Also terminals 20 are carried by rear end cover 12 for connection to a source of supply. In the front end cover 11, a pivoted cap 21 is provided to cover an opening 22 in which a flange 23 connected to the dust bag 14 is secured. A gasket 24 surrounding flange 23 serves to provide an air tight seal between the cap 21 and opening 22. In the bottom of front end cover 11, a central opening 25 is located and two side openings 26. By the provision of the openings 25 and 26 below the pivoted cap 21, it is not necessary to disconnect the hose from the cleaner when it is desired to remove the dust bag 14.

To further improve the simplicity of the operation of the vacuum cleaner, a control member 27 is provided to change from suction action to blower action without disconnecting the hose 28 from the central opening 25. As best indicated in Figs. 4 and 6, the control member 27 serves to connect the opening 25 to an inlet passage 29 communicating with the interior of dust bag 14 in one position and to connect the opening 25 to the outlet or discharge passage provided by chamber 17 in another position. Thus, by moving the control member 27 from the position of Fig. 4 to the position of Fig. 6, the hose is connected first to a source of vacuum and then to a source of pressure producing a blower action. The control member also serves to connect the two openings 26 in its first position to the discharge passage of chamber 17, as best indicated in Fig. 5, and to the inlet passage 29 in its second position, as indicated in Fig. 7. Of course, regardless of whether the control member 27 is in its first or second position, the air flows through the vacuum cleaner in the same direction, as indicated by the arrows in Fig. 1; that is, through the opening 22 into dust bag 14, through the fan unit 15 and through or around the motor 16 to the discharge passage of chamber 17. When the control member is in the first position, the air enters inlet passage 29 through opening 25 and passes out through the chamber 17 and openings 26, as indicated by the arrows between Figs. 4 and 5. When the control member is in the second position, the air enters through openings 26 passing through the inlet passage 29 and passes out through chamber 17 and opening 25. Thus, by moving the control member from its first to its second position, the hose may be connected to a source of vacuum or a source of pressure without the necessity of disconnecting the hose from the opening 25. Control member 27 is pivoted in bearings provided in the bottom of front end cover 11 and secured therein by means of a screw 30 shown in Fig. 8. For moving the control member 27 from one position to the other, a handle 31 is provided. When the handle 31 is in its first position, the control member 27 is in position to connect the opening 25 to the inlet passage 29 and thus produce a suction action. To change to a blower action, the handle 31 is moved in a counter-clockwise direction to its second position. The openings 26 are provided with upwardly directed vanes 32, as best indicated in Figs. 5 and 7, to direct air discharged through it in an upwardly direction.

From the foregoing it may be seen that an improved vacuum cleaner is provided with a dust bag that may be removed without disconnecting the hose and, in addition, the hose may be connected for vacuum or blower action without removing the hose from the opening in which it is connected. Also a vacuum cleaner is provided of simple construction requiring a minimum of effort in its operation.

What I claim is:

1. A vacuum cleaner including an outer casing open at both ends; a housing mounted in said casing; a dust bag secured in one end of said housing; a fan mounted in said housing; a motor driving said fan; a rear end cover for said casing; said casing having a discharge passage communicating with said housing at said rear end cover; a front end cover for said casing having an inlet passage communicating with the interior of said dust bag, a pivoted cap secured to said cover to permit removal of the dust bag without removing said cover; said cover having a first opening below said cap adapted to receive a hose and a second opening; and a valve control member located in said cover below said cap adapted to connect said first-named opening to said inlet passage and said second-named opening to said discharge passage, in one position, and to connect said first-named opening to said discharge passage and said second-named opening to said inlet passage, in a second position.

2. A vacuum cleaner including a casing having an opening at one end, said casing having air inlet and discharge passages communicating with said opening, a fan mounted in said casing and adapted to produce a flow of air from said inlet passage to said discharge passage, a cover for said casing opening having an opening in which a dust bag is secured in the path of air flow from said inlet to said discharge passage, a pivoted cap for said cover opening, said cover having openings below said cap, and a valve control member located in said cover below said cap for simultaneously connecting said openings below said cap one to said inlet passage and another to said discharge passage.

3. In a vacuum cleaner including an outer casing open at one end; a housing mounted in said casing; a dust bag secured in one end of said housing; a fan mounted in said housing; a motor driving said fan; said casing having a discharge passage communicating with said housing at the rear end; a front end cover for said casing having an inlet passage communicating with the interior of said dust bag; a cap covering an opening in said cover permitting removal of the dust bag from the housing without removing the cover; said cover having a first opening below said cap adapted to receive a hose and a second opening; and a valve control member located in said cover below said cap adapted to connect said first-named opening to said inlet passage and said second-named opening to said discharge passage, in one position, and to connect said first-named opening to said discharge passage and said second-named opening to said inlet passage, in a second position.

4. A vacuum cleaner including a casing having an opening in each end, a housing having an opening in each end located within said casing and spaced from the bottom of the casing, a dust bag secured in said housing at one end, a motor-fan unit mounted in said housing, a cover for one end of said casing, a pivoted cap in said cover for obtaining access to remove said dust bag without removing the cover, said cover having a plurality of openings beneath said cap, a cover closing the other end of said casing and providing a passage communicating with the interior of said housing and said casing, and a valve control member located in said first-named cover below said cap for simultaneously connecting one of said openings to the interior of said dust bag and another of said openings to the space between said housing and said casing.

5. A vacuum cleaner including a casing open at both ends, a housing mounted within said casing and spaced from one of the walls of said casing, a dust bag secured in said housing, a motor-fan unit mounted in said housing, a cover for one end of said casing, a pivoted cap secured to said cover for obtaining access to remove said dust bag through an opening in said cover without removing the cover, said cover having a plurality of openings beneath said cap, a cover for the other end of said casing closing said casing and having a passage communicating with the interior of said housing and the space between said housing and said casing, and means connecting one of said cover openings to the interior of the dust bag and another of said openings to the space between said housing and said casing.

6. A vacuum cleaner including a casing having an opening in each end, a housing mounted within said casing spaced from one of the walls of said casing, a dust bag secured in said housing, a motor-fan unit mounted in said housing, a filter mounted in the space between said housing and said casing, a cover for one end of said housing having a plurality of openings, valve means in said cover for connecting one opening with the interior of the dust bag and another opening with the space between said housing and said casing, and a cover for the other end of said casing closing the end of the casing and having a passage communicating with the interior of the housing and the space between said housing and said casing.

JOHAN ERIC VALDEMAR EDSTROM.