(12) INTERNATIONAL APPLICATION PUBLISHED UNDER THE PATENT COOPERATION TREATY (PCT)

(19) World Intellectual Property Organization
International Bureau

(43) International Publication Date
7 October 2010 (07.10.2010)

PCT

(10) International Publication Number
WO 2010/113099 A3

(51) International Patent Classification:
A47B 21/00 (2006.01) *A47B 41/02* (2006.01)

(21) International Application Number:
PCT/IB2010/051350

(22) International Filing Date:
29 March 2010 (29.03.2010)

(25) Filing Language: Italian

(26) Publication Language: English

(30) Priority Data:
TO2009A000246 31 March 2009 (31.03.2009) IT

(71) Applicant *(for all designated States except US)*: **UNIDIDA S.R.L.** [IT/IT]; Via Felizzano 6, I-10127 Torino (IT).

(72) Inventor; and

(75) Inventor/Applicant *(for US only)*: **COSTAMAGNA, Daniele** [IT/IT]; c/o UniDida S.r.l., Via Felizzano 6, I-10127 Torino (IT).

(74) Agent: **GALLAROTTI, Franco**; c/o Buzzi, Notaro & Antonielli d'Oulx S.r.l., Via Maria Vittoria 18, I-10123 Torino (IT).

(81) Designated States *(unless otherwise indicated, for every kind of national protection available)*: AE, AG, AL, AM, AO, AT, AU, AZ, BA, BB, BG, BH, BR, BW, BY, BZ, CA, CH, CL, CN, CO, CR, CU, CZ, DE, DK, DM, DO, DZ, EC, EE, EG, ES, FI, GB, GD, GE, GH, GM, GT, HN, HR, HU, ID, IL, IN, IS, JP, KE, KG, KM, KN, KP, KR, KZ, LA, LC, LK, LR, LS, LT, LU, LY, MA, MD, ME, MG, MK, MN, MW, MX, MY, MZ, NA, NG, NI, NO, NZ, OM, PE, PG, PH, PL, PT, RO, RS, RU, SC, SD, SE, SG, SK, SL, SM, ST, SV, SY, TH, TJ, TM, TN, TR, TT, TZ, UA, UG, US, UZ, VC, VN, ZA, ZM, ZW.

(84) Designated States *(unless otherwise indicated, for every kind of regional protection available)*: ARIPO (BW, GH, GM, KE, LR, LS, MW, MZ, NA, SD, SL, SZ, TZ, UG, ZM, ZW), Eurasian (AM, AZ, BY, KG, KZ, MD, RU, TJ, TM), European (AT, BE, BG, CH, CY, CZ, DE, DK, EE, ES, FI, FR, GB, GR, HR, HU, IE, IS, IT, LT, LU, LV, MC, MK, MT, NL, NO, PL, PT, RO, SE, SI, SK, SM, TR), OAPI (BF, BJ, CF, CG, CI, CM, GA, GN, GQ, GW, ML, MR, NE, SN, TD, TG).

Published:

— *with international search report (Art. 21(3))*

(88) Date of publication of the international search report:
21 April 2011

(54) Title: WORK STATION FOR COMPUTERS AND THE LIKE, PARTICULARLY FOR DIDACTIC USE

Fig. 3

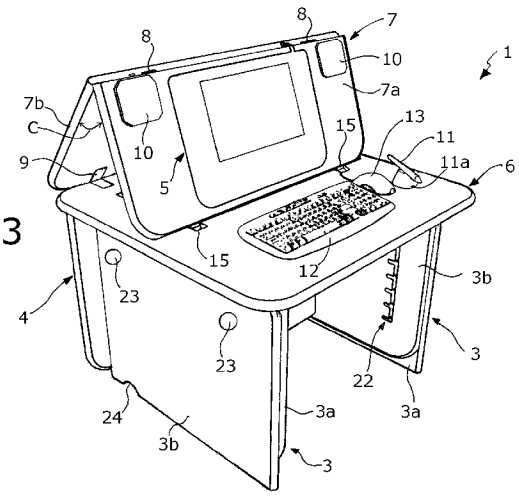

(57) Abstract: A workstation for computers and the like, particularly for didactic use, has a structure (2-4, 6, 7) comprising a work top (2) and upright elements (3) supporting the work top (2), an electronic display device (5) being mounted on the work top (2). The work top (2) comprises a lower board (6), stably coupled to the upright elements (3), and an upper board (7), displaceable with respect to the lower board (6) and subdivided into at least one front board part (7a) and one rear board part (7a, 7b) articulated to each other. The electronic display device (5) is a substantially flat display device and is secured on the front board part (7a) in a laying position substantially parallel to the front board part (7a). The front board part (7a) and the rear board part (7b) are articulated to each other according to a substantially horizontal axis, such that the upper board (7) is adapted to selectively take on a plurality of different configurations, to which different positions of use of the electronic display device (5) correspond, among which at least one lowered configuration, wherein the two board parts (7a, 7b) are essentially parallel to the lower board (6), and one or more raised configurations, in which, or in each of which, the lower surfaces of the front board part (7a) and the rear board part (7b) form a lower angle (C) therebetween which is smaller than 180°. The structure (2-4, 6, 7) also comprises stop means for keeping the two board parts (7a, 7b) in said at least one raised configuration.

WO 2010/113099 A3

INTERNATIONAL SEARCH REPORT

International application No
PCT/IB2010/051350

A. CLASSIFICATION OF SUBJECT MATTER
INV. A47B21/00 A47B41/02
ADD.

According to International Patent Classification (IPC) or to both national classification and IPC

B. FIELDS SEARCHED

Minimum documentation searched (classification system followed by classification symbols)
A47B

Documentation searched other than minimum documentation to the extent that such documents are included in the fields searched

Electronic data base consulted during the international search (name of data base and, where practical, search terms used)
EPO-Internal, WPI Data

C. DOCUMENTS CONSIDERED TO BE RELEVANT

Category*	Citation of document, with indication, where appropriate, of the relevant passages	Relevant to claim No.
A	EP 1 726 238 A1 (ASS EINRICHTUNGSSYSTEME GMBH [DE]) 29 November 2006 (2006-11-29) the whole document	1-12
X	DE 94 08 151 U1 (SONNABEND BERND [DE]) 14 July 1994 (1994-07-14) the whole document	12
A	DE 297 15 923 U1 (EUGEN RAIBLE FA [DE]) 13 November 1997 (1997-11-13) the whole document	1-12
A	EP 0 378 889 A1 (CORREN DEAN A) 25 July 1990 (1990-07-25) column 7, line 4 - line 23 figures 1-3	1-12

☐ Further documents are listed in the continuation of Box C.

☒ See patent family annex.

* Special categories of cited documents :

"A" document defining the general state of the art which is not considered to be of particular relevance

"E" earlier document but published on or after the international filing date

"L" document which may throw doubts on priority claim(s) or which is cited to establish the publication date of another citation or other special reason (as specified)

"O" document referring to an oral disclosure, use, exhibition or other means

"P" document published prior to the international filing date but later than the priority date claimed

"T" later document published after the international filing date or priority date and not in conflict with the application but cited to understand the principle or theory underlying the invention

"X" document of particular relevance; the claimed invention cannot be considered novel or cannot be considered to involve an inventive step when the document is taken alone

"Y" document of particular relevance; the claimed invention cannot be considered to involve an inventive step when the document is combined with one or more other such documents, such combination being obvious to a person skilled in the art.

"&" document member of the same patent family

Date of the actual completion of the international search	Date of mailing of the international search report
25 January 2011	02/02/2011

Name and mailing address of the ISA/	Authorized officer
European Patent Office, P.B. 5818 Patentlaan 2 NL - 2280 HV Rijswijk Tel. (+31-70) 340-2040, Fax: (+31-70) 340-3016	van Hoogstraten, S

1

INTERNATIONAL SEARCH REPORT

Information on patent family members

International application No
PCT/IB2010/051350

Patent document cited in search report	Publication date	Patent family member(s)	Publication date
EP 1726238 A1	29-11-2006	NONE	
DE 9408151 U1	14-07-1994	NONE	
DE 29715923 U1	13-11-1997	NONE	
EP 0378889 A1	25-07-1990	NONE	