US009271337B2

(12) **United States Patent**
Moon et al.

(10) **Patent No.: US 9,271,337 B2**
(45) **Date of Patent: Feb. 23, 2016**

(54) **INDUCTION HEATING COOKING APPARATUS AND CONTROL METHOD THEREOF**

(71) Applicant: **LG ELECTRONICS INC.**, Seoul (KR)

(72) Inventors: **Hyunwook Moon**, Seoul (KR); **Byeongwook Park**, Seoul (LR)

(73) Assignee: **LG ELECTRONICS INC.**, Seoul (KR)

(*) Notice: Subject to any disclaimer, the term of this patent is extended or adjusted under 35 U.S.C. 154(b) by 262 days.

(21) Appl. No.: **13/837,717**

(22) Filed: **Mar. 15, 2013**

(65) **Prior Publication Data**

US 2013/0248517 A1 Sep. 26, 2013

(30) **Foreign Application Priority Data**

Mar. 21, 2012 (KR) 10-2012-0028914

(51) **Int. Cl.**
H05B 6/12 (2006.01)
H05B 6/06 (2006.01)

(52) **U.S. Cl.**
CPC ***H05B 6/1236*** (2013.01); ***H05B 6/065*** (2013.01); ***H05B 6/1272*** (2013.01); ***H05B 6/1281*** (2013.01); *H05B 2213/03* (2013.01); *H05B 2213/05* (2013.01); *Y02B 40/126* (2013.01)

(58) **Field of Classification Search**
CPC H05B 2213/03; H05B 2213/05; H05B 6/065; H05B 6/1236; H05B 6/1272; H05B 6/1281; Y02B 40/126
USPC 219/620, 621, 622, 624, 626, 627, 676
See application file for complete search history.

(56) **References Cited**

U.S. PATENT DOCUMENTS

3,953,783 A 4/1976 Peters, Jr. 321/43
4,013,859 A * 3/1977 Peters, Jr. 219/626

(Continued)

FOREIGN PATENT DOCUMENTS

FR 2839604 A1 11/2003
WO WO 2010/069883 A1 6/2010
WO WO 2011/107328 A1 9/2011

OTHER PUBLICATIONS

English Language Translation of WO2010069883, Aranda Igancio Garde, Jan. 24, 2010.*

(Continued)

Primary Examiner — Dana Ross
Assistant Examiner — Joseph Iskra
(74) *Attorney, Agent, or Firm* — Ked & Associates LLP

(57) **ABSTRACT**

An induction heating cooking apparatus and a control method thereof are provided. A vessel can be effectively heated by using a plurality of heating coils regardless of a position of the vessel. By connecting a plurality of heating coils to a smaller amount of inverters through relays, only a heating coil on which a vessel is placed, among the plurality of heating coils, can be heated. Also, by connecting the heating coils in series, a current flowing in the heating coil can be lowered, and thus, a rated current of the inverter can be lowered. Also, by connecting relays and heating coils such that a larger amount of heating coils are operated, while minimizing the amount of inverters, manufacturing cost can be reduced, operation efficiency can be increased, and stability of the cooking apparatus can be enhanced.

17 Claims, 8 Drawing Sheets

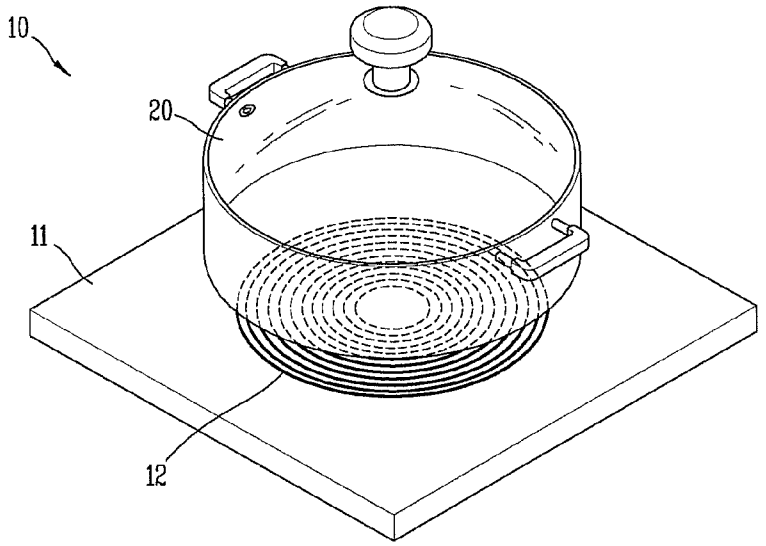

(56) **References Cited**

U.S. PATENT DOCUMENTS

4,749,836	A *	6/1988	Matsuo et al.	219/626
6,528,770	B1	3/2003	Akel et al.	219/624
2005/0115957	A1 *	6/2005	Kataoka et al.	219/620
2007/0241101	A1	10/2007	Seok	219/660
2011/0226756	A1	9/2011	Valero et al.	219/622
2011/0240632	A1 *	10/2011	Falcon et al.	219/601
2012/0321761	A1	12/2012	De La Cuerda Ortin et al.	426/231

OTHER PUBLICATIONS

English Language Translation of FR2839604, Francois Forest, Nov. 14, 2003.*

English Language Translation of WO2011107328, Paul Muresan, Sep. 9, 2011.*

European Search Report dated May 6, 2014 issued in Application No. 13 159 724.7.

* cited by examiner

FIG. 1

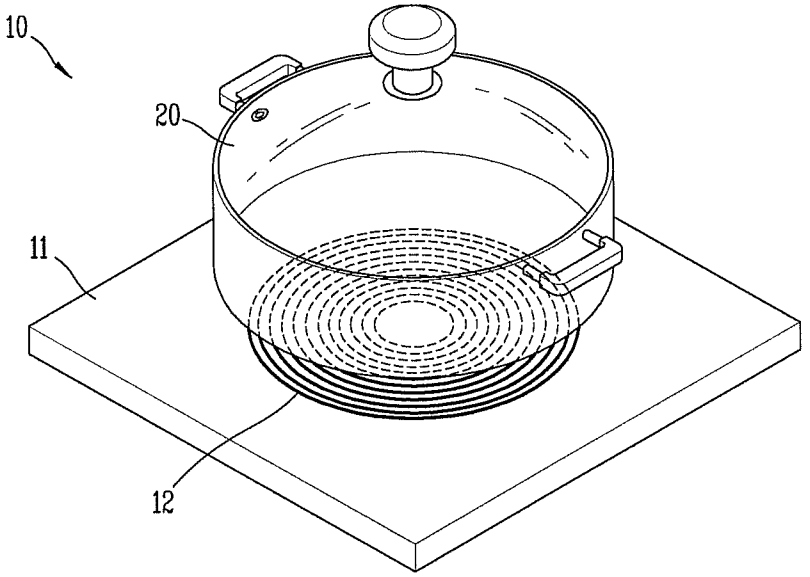

FIG. 2

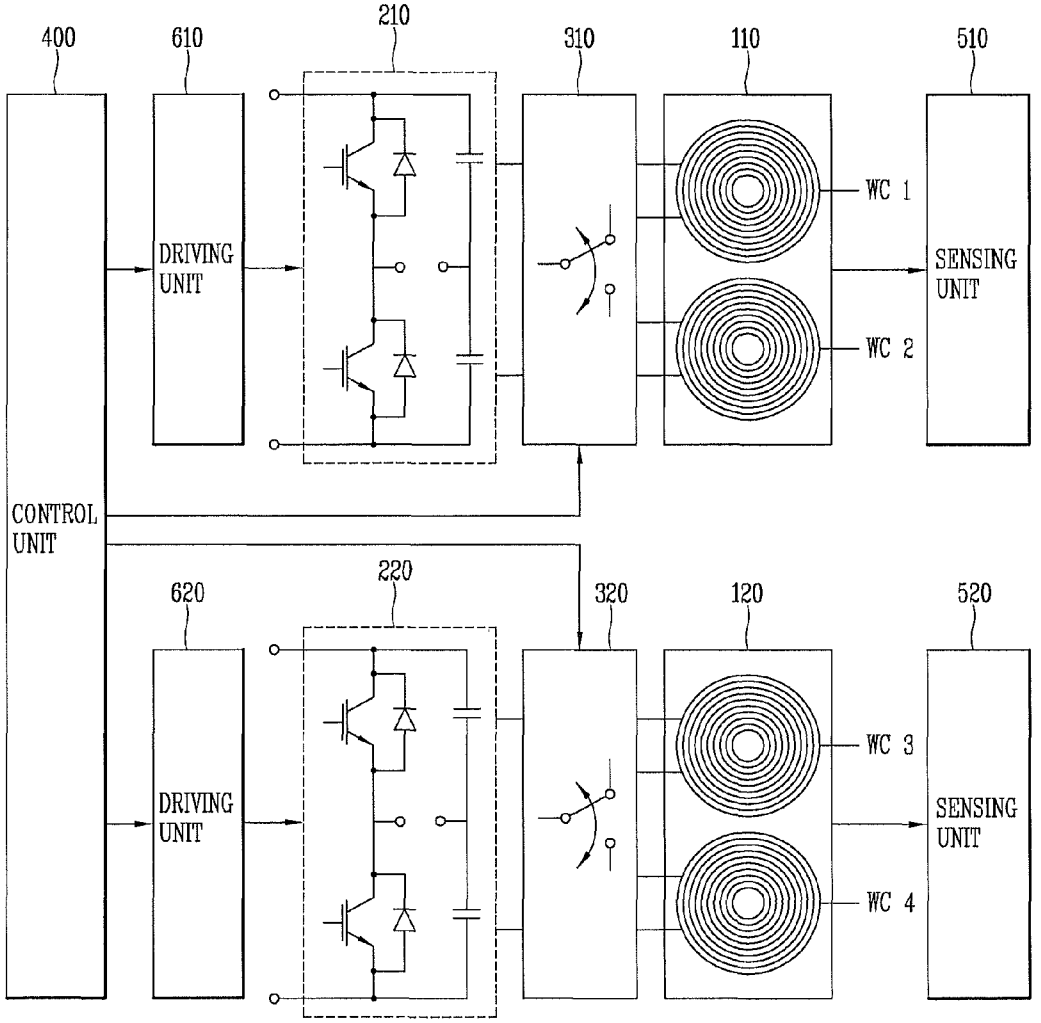
400
610
210
310
110
510
DRIVING UNIT
WC 1
WC 2
SENSING UNIT
CONTROL UNIT
620
220
320
120
520
DRIVING UNIT
WC 3
WC 4
SENSING UNIT

FIG. 3

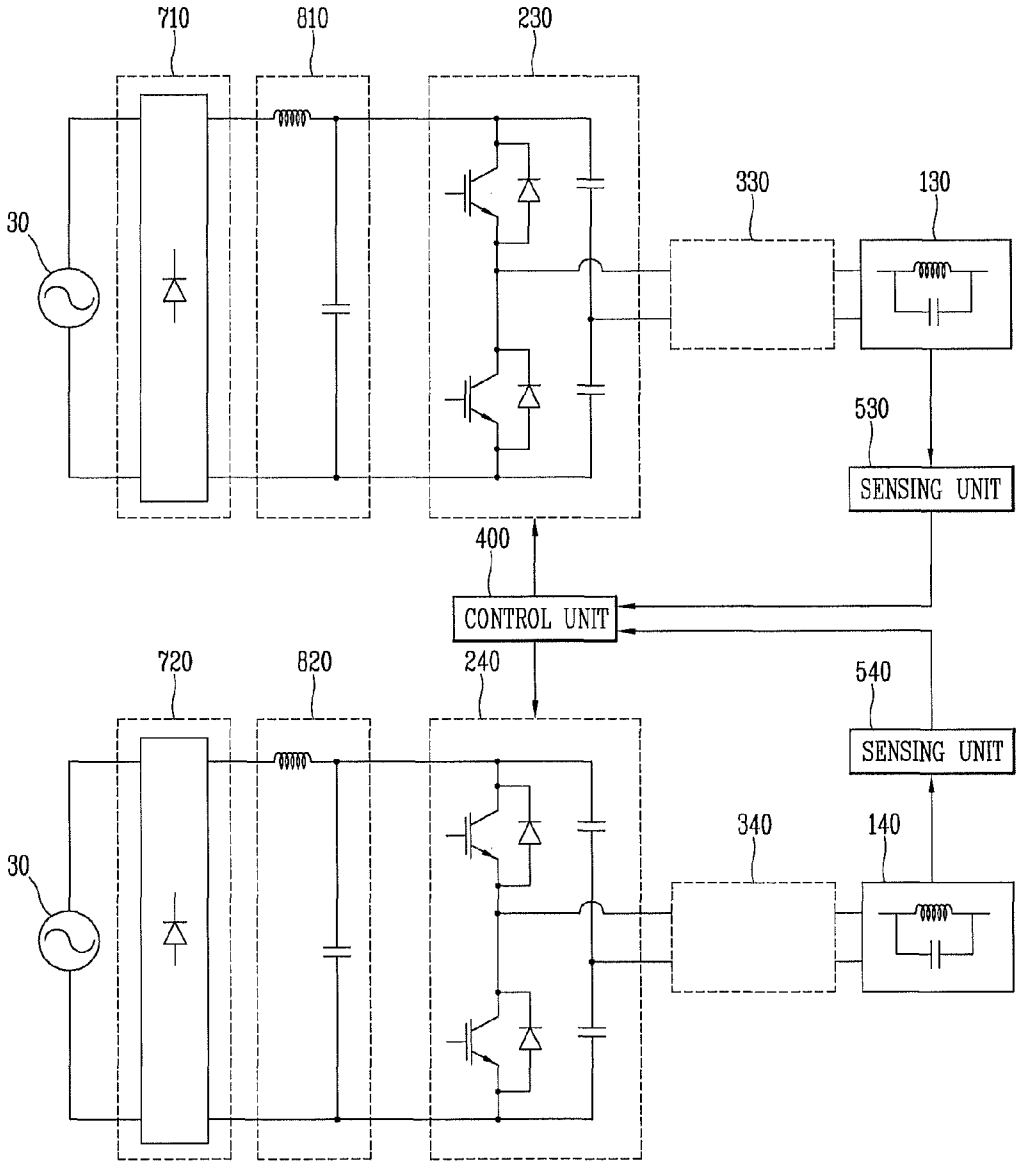
710
810
230
330
130
30
530
SENSING UNIT
400
CONTROL UNIT
720
820
240
540
SENSING UNIT
340
140
30

FIG. 4

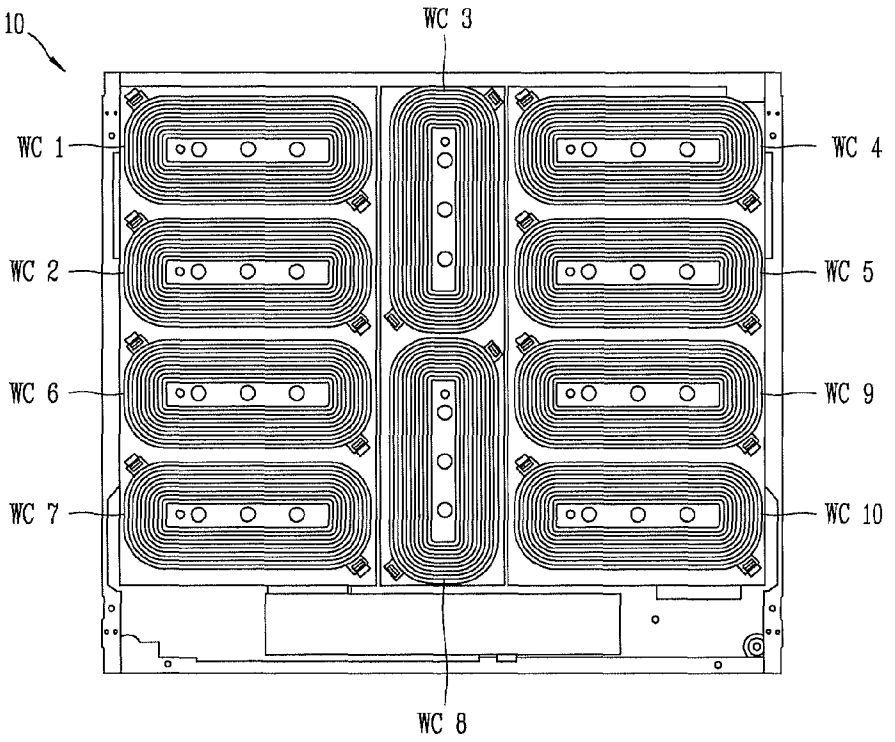
10
WC 3
WC 1
WC 4
WC 2
WC 5
WC 6
WC 9
WC 7
WC 10
WC 8

FIG. 5

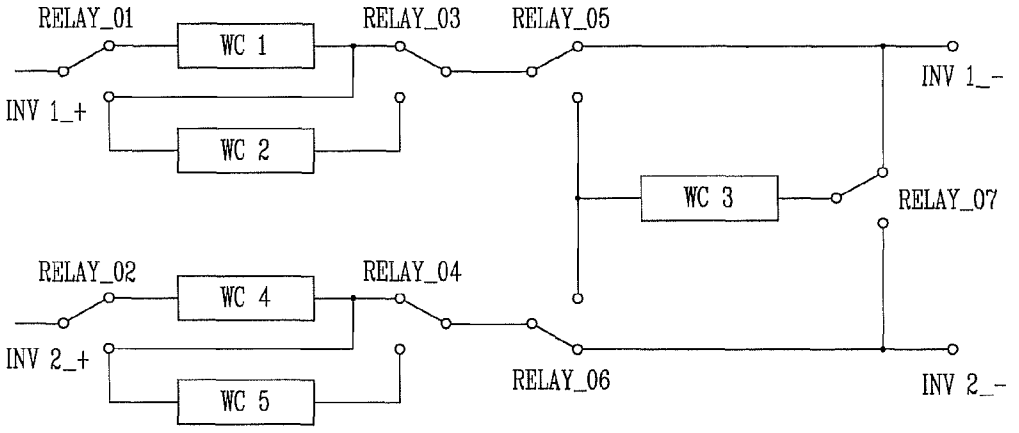
RELAY_01
WC 1
RELAY_03
RELAY_05
INV 1_-
INV 1_+
WC 2
WC 3
RELAY_07
RELAY_02
WC 4
RELAY_04
INV 2_+
WC 5
RELAY_06
INV 2_-

FIG. 6

0: CLEAR
1: SET
–: DON'T CARE

RELAY_01	RELAY_02	RELAY_03	RELAY_04	RELAY_05	RELAY_06	RELAY_07	WORKING COIL	INV
0	–	0	–	0	–	–	WC 1	1
1	–	1	–	0	–	–	WC 2	
1	–	0	–	1	–	0	WC 3	
–	1	–	0	–	1	0	WC 3	2
–	0	–	0	–	0	–	WC 4	
–	1	–	1	–	0	–	WC 5	
0	–	1	–	0	–	–	WC 1+WC 2	1
0	–	0	–	1	0	0	WC 1+WC 3	
1	–	1	–	1	0	0	WC 2+WC 3	
–	0	–	1	–	0	–	WC 4+WC 5	2
–	0	–	0	–	1	1	WC 3+WC 4	
–	1	–	1	–	1	1	WC 3+WC 5	
0	–	1	–	1	0	0	WC 1+WC 2+WC 3	1
–	0	–	1	1	1	1	WC 3+WC 4+WC 5	2

FIG. 7

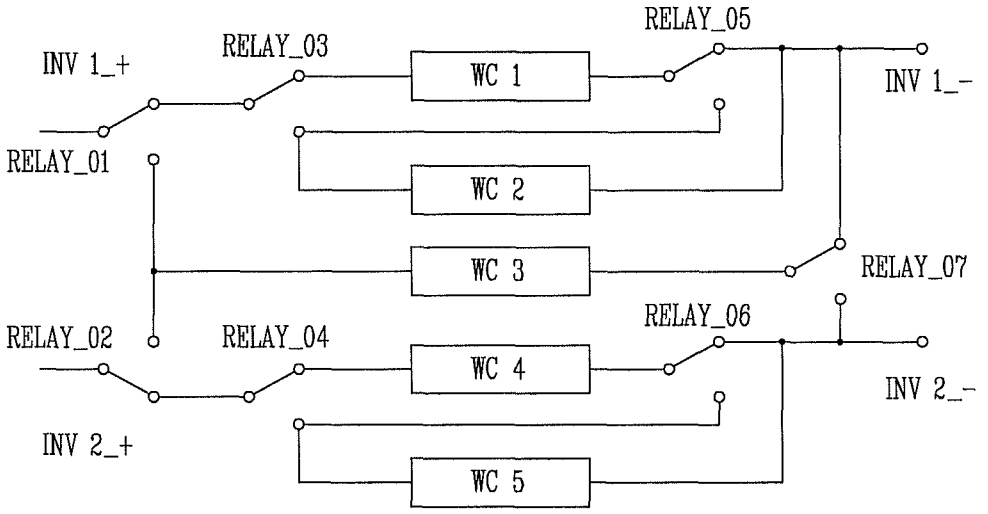
INV 1_+
RELAY_03
WC 1
RELAY_05
INV 1_-
RELAY_01
WC 2
WC 3
RELAY_07
RELAY_02
RELAY_04
WC 4
RELAY_06
INV 2_-
INV 2_+
WC 5

FIG. 8

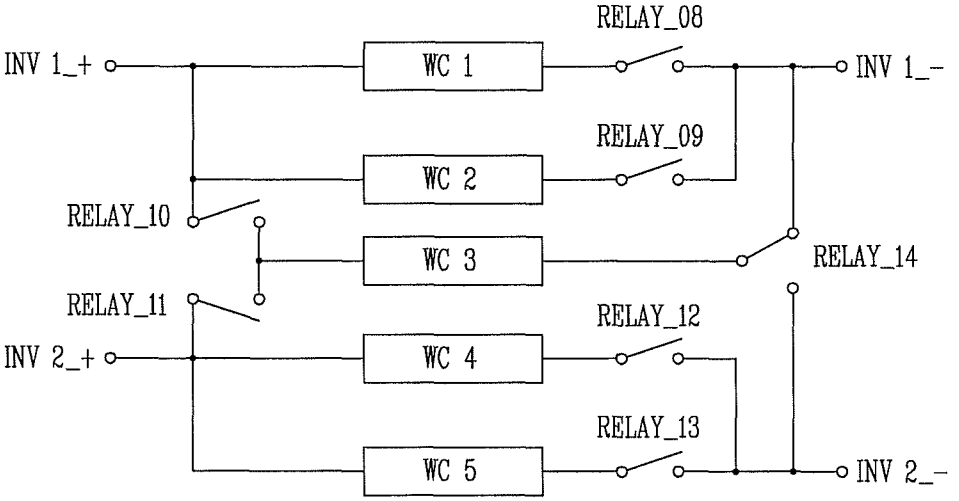
RELAY_08
INV 1_+
WC 1
INV 1_-
RELAY_09
WC 2
RELAY_10
WC 3
RELAY_14
RELAY_11
RELAY_12
INV 2_+
WC 4
RELAY_13
WC 5
INV 2_-

FIG. 9

0: CLEAR
1: SET
–: DON'T CARE

RELAY_08	RELAY_09	RELAY_10	RELAY_11	RELAY_12	RELAY_13	RELAY_14	WORKING COIL	INV
1	–	–	–	–	–	–	WC 1	1
–	1	–	–	–	–	–	WC 2	
–	–	1	–	–	–	0	WC 3	
–	–	–	–	–	–	–	WC 3	2
–	–	–	–	1	–	–	WC 4	
–	–	–	–	–	1	–	WC 5	
1	1	–	–	–	–	–	WC 1+WC 2	1
1	–	1	–	–	–	0	WC 1+WC 3	
–	1	1	–	–	–	0	WC 2+WC 3	
–	–	–	–	1	1	–	WC 4+WC 5	2
–	–	–	1	1	–	1	WC 3+WC 4	
–	–	–	1	–	1	1	WC 3+WC 5	
1	1	1	–	–	–	0	WC 1+WC 2+WC 3	1
–	–	–	1	1	1	1	WC 3+WC 4+WC 5	2

FIG. 10

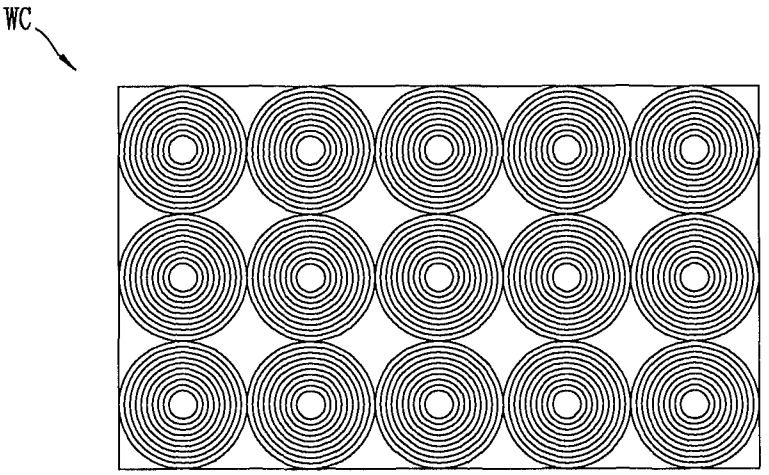
WC

FIG. 11

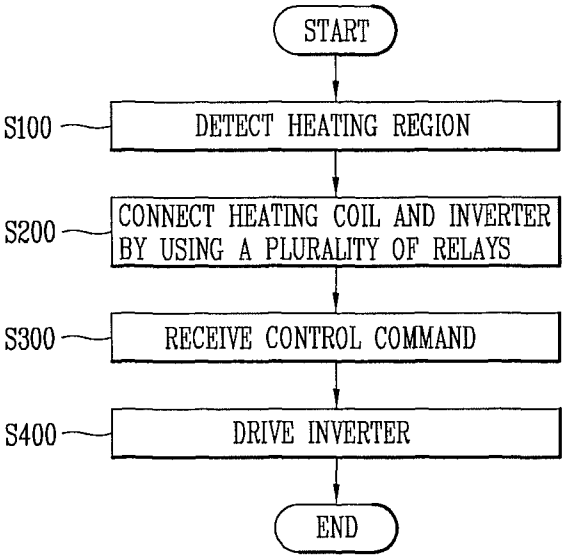
START
S100
DETECT HEATING REGION
S200
CONNECT HEATING COIL AND INVERTER BY USING A PLURALITY OF RELAYS
S300
RECEIVE CONTROL COMMAND
S400
DRIVE INVERTER
END

INDUCTION HEATING COOKING APPARATUS AND CONTROL METHOD THEREOF

CROSS-REFERENCE TO RELATED APPLICATION

Pursuant to 35 U.S.C. §119(a), this application claims the benefit of earlier filing date and right of priority to Korean Application No. 10-2012-0028914, filed on Mar. 21, 2012, the contents of which is incorporated by reference herein in its entirety.

BACKGROUND OF THE INVENTION

1. Field of the Invention

The present disclosure relates to a cooking apparatus and, more particularly, to an induction heating cooking apparatus having a plurality of heating coils.

2. Background of the Invention

An induction heating cooking apparatus is a device for cooking food by using heat generated by eddy current loss and hysteresis loss generated in a cooking vessel (or a cooking container) made of metal when an AC magnetic field is applied to the cooking vessel. The induction heating cooking apparatus has an advantage in that it has high efficiency. As illustrated in FIG. **1**, an induction heating cooking apparatus **10** includes a heating coil **12** provided in a lower portion of an upper plate **11** on which a vessel **20** is placed, and as the heating coil is heated, a food item within the vessel is heated. The induction heating cooking apparatus further includes an inverter serving to apply a high frequency current to the heating coil **12**.

In general, the inverter of the induction heating cooking apparatus may be implemented as one of a half-bridge type induction heating cooking apparatus, a full-bridge type induction heating cooking apparatus, a class E-type induction heating cooking apparatus, and the like. Also, in general, a single heating coil is connected to a single inverter.

Recently, products, such as a free cook zone type product, which detect a position of a vessel and heat the vessel no matter where the vessel is placed on an upper plate thereof have been introduced to the market of induction heating cooking apparatuses. In order to maximize heating efficiency, the amount of heating coils is advantageously required to be increased, and in this case, as the amount of heating coils is increased, the amount of inverters for driving them is also increased.

SUMMARY OF THE INVENTION

Therefore, an aspect of the detailed description is to provide an induction heating cooking apparatus in which a large amount of heating coils are operated, while minimizing the amount of inverters through a simple topology, and a control method thereof.

Another aspect of the detailed description is to provide an induction heating cooking apparatus in which a heating coil is connected to or separated from an inverter by using a relay and heating coils are connected in series to an inverter in order to reduce a current flowing in the heating coils, and a control method thereof.

To achieve these and other advantages and in accordance with the purpose of this specification, as embodied and broadly described herein, an induction heating cooking apparatus includes: a heating unit configured to include a plurality of heating coils forming heating regions and heat a vessel placed in each heating region, respectively; a plurality of inverters configured to supply a driving voltage to one or more of the heating coils; a control unit configured to detect one or more heating regions in which the vessel is placed and control the plurality of inverters according to a control command; and a plurality of relays connecting the one or more heating coils corresponding to the heating regions detected by the control unit and the one or more of the inverters.

To achieve these and other advantages and in accordance with the purpose of this specification, as embodied and broadly described herein, an induction heating cooking apparatus includes: a converter configured to convert an input voltage from a commercial AC power source into a DC voltage and output the same; a smoothing unit configured to smooth the DC voltage output from the converter; a heating unit configured to include a plurality of heating coils forming heating regions and heat a vessel placed in each heating region, respectively, and resonance capacitors connected to the heating coils to generate resonance; a plurality of inverters configured to convert the smoothed DC voltage from the smoothing unit into a driving voltage according to a control signal, and supply the driving voltage to one or more of the heating coils; an input unit configured to receive a control command with respect to the heating unit; a control unit configured to detect one or more heating regions in which the vessel is placed, and generate the control signal for controlling the plurality of inverters according to the control command; and a plurality of relays connecting one or more of the heating coils corresponding to heating regions detected by the control unit and one or more of the inverters, on the basis of respective opening and closing signals.

To achieve these and other advantages and in accordance with the purpose of this specification, as embodied and broadly described herein, a method for controlling an induction heating cooking apparatus including a heating unit configured to include a plurality of heating coils forming heating regions and heat a vessel placed in each heating region, respectively, a plurality of inverters configured to supply a driving voltage to one or more of the heating coils, and a plurality of relays, includes: detecting one or more heating regions in which the vessel is placed; connecting the one or more heating coils corresponding to the heating regions and one or more of the inverters by the plurality of relays; receiving a control command; and driving a corresponding inverter according to the control command.

According to embodiments of the present invention, a vessel can be effectively heated by using a plurality of heating coils regardless of a position of the vessel.

According to embodiments of the present invention, since a plurality of heating coils are connected to a smaller amount of inverters through relays, only a heating coil on which a vessel is placed, among the plurality of heating coils, can be heated. Also, since the heating coils are connected in series, a current flowing in the heating coil can be lowered, and thus, a rated current of the inverter can be lowered.

In the embodiments of the present invention, since relays and heating coils are connected such that a larger amount of heating coils are operated, while minimizing the amount of inverters, manufacturing cost can be reduced, operation efficiency can be increased, and stability of the cooking apparatus can be enhanced.

Further scope of applicability of the present application will become more apparent from the detailed description given hereinafter. However, it should be understood that the detailed description and specific examples, while indicating preferred embodiments of the invention, are given by way of illustration only, since various changes and modifications

within the spirit and scope of the invention will become apparent to those skilled in the art from the detailed description.

BRIEF DESCRIPTION OF THE DRAWINGS

The accompanying drawings, which are included to provide a further understanding of the invention and are incorporated in and constitute a part of this specification, illustrate exemplary embodiments and together with the description serve to explain the principles of the invention.

In the drawings:

FIG. **1** is a perspective view illustrating the exterior of a general induction heating cooking apparatus;

FIGS. **2** and **3** are block diagrams of induction heating cooking apparatuses according to embodiments of the present invention;

FIG. **4** is a view illustrating the layout of heating coils according to an embodiment of the present invention;

FIG. **5** is a connection diagram of the heating coils and relays according to an embodiment of the present invention;

FIG. **6** is a view illustrating connections of heating coils according to a relay operation in FIG. **5**;

FIG. **7** is a connection diagram of the heating coils and relays according to another embodiment of the present invention;

FIG. **8** is a connection diagram of the heating coils and relays according to another embodiment of the present invention;

FIG. **9** is a view illustrating connections of heating coils according to a relay operation in FIG. **8**;

FIG. **10** is a cross-sectional view illustrating flat litz wire type heating coils; and

FIG. **11** is a flow chart schematically illustrating a method for controlling an induction heating cooking apparatus according to an embodiment of the present invention.

DETAILED DESCRIPTION OF THE INVENTION

Description will now be given in detail of the exemplary embodiments, with reference to the accompanying drawings. For the sake of brief description with reference to the drawings, the same or equivalent components will be provided with the same reference numbers, and description thereof will not be repeated.

Referring to FIG. **2**, an induction heating cooking apparatus according to an embodiment of the present invention, heating units **110** and **120** including a plurality of heating coils forming heating regions, respectively, and heating a vessel (or a container) placed in the heating regions, a plurality of inverters **210** and **220** configured to supply a driving voltage to one or more of the heating coils, a control unit **400** configured to detect one or more heating regions in which the vessel is placed and controlling the plurality of inverters according to a control command, and a plurality of relays **310** and **320** configured to connect one or more of the heating coils corresponding to the heating region detected by the control unit **400** and one or more of the inverters, on the basis of opening and closing signals with respect to each of the relays.

The heating units **110** and **120** may further include resonance capacitors connected to the heating coils to generate resonance, respectively. Namely, the heating units **110** and **120** may form a resonance circuit comprised of the heating coil and the resonance capacitor to heat the vessels placed in the heating regions, respectively.

The inverters **210** and **220** include a switching element switched according to a driving signal from the driving units **610** and **620**, respectively. Here, in general, the switching element is a high frequency semiconductor.

The switching element may be configured as one of a bipolar junction transistor (BJT), a metal oxide semiconductor field effect transistor (MOSFET), an insulated gate polar transistor (IGBT), and the like. The inverters **210** and **220** may further include a backward diode. The backward diode may perform freewheeling function.

The relays **310** and **320** connect the heating coils and the inverters **210** and **220**. Namely, the relays **310** and **320** connect one or more heating coils corresponding to the heating regions detected by the control unit **400** and one or more of the inverters **210** and **220**. The relays **310** and **320** are mechanical and electrical elements operating according to an opening and closing signal from the control unit **400** to open and close lines, respectively.

For example, in a case in which the switching elements are IGBTs, the driving units **610** and **620** may be, for example, gate driving ICs, or the like, for outputting a gate driving signal to the inverters **210** and **220**. The driving units **610** and **620** receive a control signal from the control unit **400**, respectively. The control unit **400** outputs a control signal for regulating a degree of heating the heating coils according to a control command from a user input through an input unit (not shown), to the driving units **610** and **620**. In this case, the control signal may be a voltage or frequency variable signal.

The induction heating cooking apparatus may further include sensing units **510** and **520** detecting a current of the heating coils and outputting a corresponding current value. The control unit **400** compares the current value with a predetermined reference current value, and detects the one or more heating regions in which the vessel is placed, on the basis of the comparison results. For example, when the control unit **400** sequentially applies a high frequency voltage to the respective coils, the sensing units **510** and **520** sense a current generated in each heating coil, and output the current value to the control unit **400**. The control unit **400** compares the current value output from the sensing units **510** and **520** and a reference current value to detect a heating region. Here, the reference current value may be measured and set in advance through an experiment, or the like, according to the amount, form, position, connection relationship, and the like, of the heating coils. Each of the sensing units **510** and **520** may include various types of sensors for sensing vibration, weight, magnetic field, and the like.

The amount of the inverters **210** and **220** is less than the amount of the heating coils WC. Namely, each of the plurality of inverters **210** and **220** is connected to some of the plurality of heating coils in order to supply the driving voltage thereto. Among the plurality of heating coils, heating coils that may be connectable to one inverter (i.e., a same inverter) are connected to each other by the relays.

Referring to FIG. **3**, the induction heating cooking apparatus according to another embodiment of the preset invention includes converter **710** and **720** converting an input voltage from a commercial alternating current (AC) power source into a direct current (DC) voltage and outputting the same, respectively, smoothing units **810** and **820** smoothing the output DC voltage from the converters **700**, respectively, heating units **130** and **140** including a plurality of heating coils forming heating regions and heating vessels placed in the heating regions and resonance capacitors connected to the heating coils to generate resonance, a plurality of inverters **230** and **240** converting the smoothed DC voltage from the smoothing units **810** and **820** into driving voltages, and supplying the driving voltages to the one or more of the heating coils, an input unit (not shown) receiving a control command

with respect to the heating units **130** and **140**, a control unit **400** detecting one or more heating regions in which the vessels are placed, and generating the control signal for controlling the plurality of inverters according to the control command, and a plurality of relays **330** and **340** connecting one or more of the heating coils corresponding to the heating regions detected by the control unit **400** and one or more of the inverters **230** and **240**, on the basis of opening and closing signals of the respective relays.

A description of the same elements as those of FIG. **2** will be omitted.

In FIGS. **2** and **3**, the inverters **210**, **220**, **230**, and **240** are illustrated as half-bridge type inverters, but the present invention is not limited thereto and the inverters **210**, **220**, **230**, and **240** may also be implemented as full-bridge type inverters in the same manner. Also, two pairs of heating coils (totaling four heating coils), two inverters, and two relays are illustrated, but the present invention is not limited thereto and three or more pairs of heating coils, three or more inverters, and three or more relays may also be implemented as necessary.

The converters **710** and **720** are connected to commercial AC power sources **30**, and convert an AC voltage input from the commercial AC power sources **30** into a DC voltage, respectively. As the converters **710** and **720**, in general, a power bridge diode (PBD) is used. The DC voltage in this case has a waveform of a pulsating current.

The smoothing units **810** and **820** remove harmonics from the DC voltage having a pulsating current waveform output from the converters **710** and **720** through a reactor, and smooth it through a smoothing capacitor, respectively. A voltage applied to the smoothing capacitor in this case is a DC link voltage.

An operation of the induction heating cooking apparatus according to embodiments of the present invention will be described with reference to FIGS. **4** through **8**.

As illustrated in FIGS. **5** through **7**, in a case in which two inverters are formed to supply power to heating coils, a heating unit may include a first coil unit including two or more heating coils driven by a first inverter, connected to each other in series, and forming a first heating region, a second coil unit including two or more heating coils driven by a second inverter, connected to each other in series, and forming a second heating region, and a third coil unit including one or more heating coils driven by the first inverter or the second inverter, connected to the first coil unit or the second coil unit in series or directly connected to the first inverter or the second inverter to form a third heating region.

FIG. **4** illustrates an example of a heating unit including ten heating coils. Referring to FIG. **5**, five heating coils, among the heating coils of FIG. **4**, and two inverters are connected, and a plurality of relays are provided between the heating coils and the inverters.

The heating coils illustrated in FIG. **4** may be configured as flat litz wire type heating coils as illustrated in FIG. **10**. The flat litz wire type coils may be formed by compressing circular litz wire type heating coils. In the case of the flat litz wire type heating coils, they may be wound by a relatively large number of turns over a limited width (or over a predetermined width).

Referring to FIGS. **5** and **6**, first inverter INV **1** and second inverter INV **2** apply a high frequency voltage to heating coils **1** to **5** WC **1** to WC **5** through relays RELAY_**01** to RELAY_**07**, respectively.

A case in which a vessel is placed in a heating region handled by the is heating coil **1** WC **1** will be described. The heating coil **1** WC **1** receives power from the inverter **1** INV**1**, and the heating coil **1** WC **1** and the inverter **1** INV**1** are connected by the relay **1** RELAY_**01**, the relay **3** RELAY_**03**, and the relay **5** RELAY_**05**. Namely, in order to operate the heating coil **1** WC**1**, the control unit outputs an opening and closing signal **0** to the relay **1** RELAY_**01**, the opening and closing signal **0** to the relay **3** RELAY_**03**, and the opening and closing signal **0** to the relay **5** RELAY_**05**, respectively.

Similarly, in the case of the heating coil **2** WC **2**, the control unit outputs an opening and closing signal **1** to the relay **1** RELAY_**01**, the opening and closing signal **1** to the relay **3** RELAY_**03**, and the opening and closing signal **0** to the relay **5** RELAY_**05**.

Meanwhile, the heating coil **3** WC **3** is connected to the first inverter **1** INV **1** by the relay **1** RELAY_**01**, relay **3** RELAY_**03**, the relay **5** RELAY_**05**, and a relay **7** RELAY_**07**. In order to heat the heating coil **3** WC**3**, the control unit outputs the opening and closing signal **1** to the relay **1** RELAY_**01**, the opening and closing signal **0** to the relay **3** RELAY_**03**, the opening and closing signal **1** to the relay **5** RELAY_**05**, and the opening and closing signal **0** to the relay **7** RELAY_**07**.

The heating coil **4** WC **4** and the heating coil **5** WC **5** receive power from the inverter **2** INV **2**. Operations of the heating coil **4** WC **4** and the heating coil **5** WC **5** are referred to FIGS. **5** and **6**.

When the vessel is placed to extend over the heating coil **1** WC **1** and the heating coil **2** WC **2**, the control unit may output the opening and closing signal **0** to the relay **1** RELAY_**01**, the opening and closing signal **1** to the relay **3** RELAY_**03**, and the opening and closing signal **0** to the relay **5** RELAY_**05** to is allow the inverter **1** INV **1** to supply power to the heating coil **1** WC **1** and the heating coil **2** WC **2**. Here, the heating coil **1** WC **1** and the hating coil **2** WC **2** are connected in series. Namely, since two heating coils are connected to the single inverter in series, rather than in parallel, a current flowing in the heating coils is lowered. Thus, a rate current of the switching elements, e.g., the IGBT, the MOSFET, and the like, in the inverter can be lowered.

When the vessel is placed to extend over the heating coil **3** WC **3** to the heating coil **5** WC **5**, the control unit outputs the opening and closing signal **0** to the relay **2** RELAY_**02** and the opening and closing signal **1** to the relay **4** RELAY_**04** to the relay **7** RELAY_**07** to allow the inverter **2** INV **2** to supply power to the heating coil **3** WC **3** to the heating coil **5** WC **5**. Also, in this case, the heating coil **3** WC **3** to the heating coil **5** WC **5** are connected in series.

FIG. **7** shows another example of connections of the heating coils and the relays. Namely, although the same amount of inverters, heating coils, and relays is provided, the induction heating cooking apparatus illustrated in FIG. **7** may have connections different from those of the induction heating cooking apparatus of FIG. **5**. Also, in this case, similarly, the control unit may output and closing signals to the relays connecting the heating coils corresponding to heating regions in which a vessel is placed, to heat the heating coils. Of course, number of cases may be different from that of FIG. **6**.

FIG. **8** shows another example of connections of the heating coils and the relays. Namely, although the same amount of inverters, heating coils, and relays is provided, the induction heating cooking apparatus illustrated in FIG. **7** may have connections different from those of the induction heating cooking apparatus of FIG. **5** or FIG. **7**. Also, in this case, similarly, the control unit may output and closing signals to the relays connecting the heating coils corresponding to heating regions in which a vessel is placed, to heat the heating coils. Of course, number of cases may be different from that of FIG. **9**.

Referring to FIG. **11**, a method for controlling an induction heating cooking apparatus according to an embodiment of the present invention may include step (S**100**) of detecting one or more heating regions in which a vessel is placed, step (S**200**) of connecting one or more of the heating coils corresponding to the heating regions and one or more of the inverters by a plurality of relays, step (S**300**) of receiving a control command, and step (S**400**) of driving a corresponding inverter according to the control command. The configuration of the respective steps of the control method will be described with reference to FIGS. **2** to **10**, together.

The step (S**100**) of detecting a heating region may include a process of detecting currents of the heating coils to output current values and a process of comparing the current values with a predetermined reference current value, and on the basis of the comparison results, one or more heating regions in which the vessel is placed are detected. Of course, the heating regions in which the vessel may also be detected by using a different type sensing value.

The method for controlling an induction heating cooking apparatus according to embodiments of the present invention will be described with reference to FIGS. **4** through **9**.

FIG. **4** illustrates an example of a heating unit including ten heating coils. Referring to FIG. **5**, five heating coils, among the heating coils of FIG. **4**, and two inverters are connected, and a plurality of relays are provided between the heating coils and the inverters.

Referring to FIGS. **5** and **6**, first inverter INV **1** and second inverter INV **2** is apply a high frequency voltage to heating coils WC **1** to WC **5** through relays **1** to **7** RELAY_**01** to RELAY_**07**, respectively.

A case in which a vessel is placed in a heating region handled by the heating coil **1** WC **1** will be described. Namely, when the vessel is placed on the heating coil **1** WC **1**, a current value of the heating coil **1** WC **1** is changed, and when the changed current value is equal to or greater than a reference current value, it is determined that the vessel is placed in the heating region handled by the heating coil **1** WC **1** (S**100**). The heating coil **1** WC **1** receives power from the inverter **1** INV**1** and the heating coil **1** WC**1** and the inverter **1** INV**1** are connected by the relay **1** RELAY_**01**, the relay **3** RELAY_**03**, and the relay **5** RELAY_**05**. Namely, the heating coil **1** WC **1** is connected to the inverter **1** INV **1** by the relay **1** RELAY_**01** and the relay **3** RELAY_**03** (S**200**). In this case, the control unit outputs an opening and closing signal **0** to the relay **1** RELAY_**01**, the opening and closing signal **0** to the relay **3** RELAY_**03**, and the opening and closing signal **0** to the relay **5** RELAY_**05**, respectively. Thereafter, the induction heating cooking apparatus receives a control command with respect to the vessel from the user (S**300**), and generates a control signal according to the control command to drive the inverter **1** INV **1** (S**400**).

Similarly, in the case of the heating coil **2** WC **2**, the control unit outputs an opening and closing signal **1** to the relay **1** RELAY_**01**, the opening and closing signal **1** to the relay **3** RELAY_**03**, and the opening and closing signal **0** to the relay **5** RELAY_**05**. Namely, when it is detected that a vessel is placed on the heating coil **2** WC **2** (S**100**), in the induction heating cooking apparatus, the heating coil **2** WC **2** is connected to the inverter **1** INV **1** by the relay **1** RELAY_**01**, the relay **3** RELAY_**03**, and the relay **5** RELAY_**05** and power is supplied to the heating coil **2** WC **2** (S**200**).

Meanwhile, the heating coil **3** WC **3** is connected to the inverter **1** by the relay **1** RELAY_**01**, relay **3** RELAY_**03**, the relay **5** RELAY_**05**, and a relay **7** RELAY_**07**. In order to heat the heating coil **3** WC**3**, the control unit outputs the opening and closing signal **1** to the relay **1** RELAY_**01**, the opening and closing signal **0** to the relay **3** RELAY_**03**, the opening and closing signal **1** to the relay **5** RELAY_**05**, and the opening and closing signal **0** to the relay **7** RELAY_**07**.

The heating coil **4** WC **4** and the heating coil **5** WC **5** receive power from the inverter **2** INV **2**. Operations of the heating coil **4** WC **4** and the heating coil **5** WC **5** are referred to FIGS. **5** and **6**.

When it is detected that the vessel is placed to extend over the heating coil **3** WC **3** and the heating coil **5** WC **5** (S**100**), in the induction heating cooking apparatus, the heating coil WC **3** and the heating coil **5** WC **5** are connected to the inverter **2** INV **2** through relays (S**200**). In this case, the control unit outputs opening and closing signals to the corresponding relays. In detail, the control unit outputs the opening and closing signal **1** to the relay **2** RELAY_**02**, the opening and closing signal **1** to the relay **4** RELAY_**04**, the opening and closing signal **1** to the relay **6** RELAY_**06**, and the opening and closing signal **1** to the relay **7** RELAY_**07**, to allow the heating coil **3** WC **3** and the heating coil **5** WC **5** to be connected to the inverter **2** INV **2**. In this case, the heating coil **3** WC **3** and the hating coil **5** WC **5** are connected in series. Namely, since two heating coils are connected to one inverter in series, rather than in parallel, a current flowing in the heating coils is lowered. Thus, a rate current of the switching elements, e.g., the IGBT, the MOSFET, and the like, in the inverter can be lowered. Thereafter, the induction heating cooking apparatus drives the inverter **2** with respect to the heating coil **3** WC **3** and the heating coil **5** WC **5** according to a control command from the user (S**300** and S**400**).

When it is detected that the vessel is placed to extend over the heating coil **3** WC **3** to the heating coil **5** WC **5** (S**100**), the control unit outputs the opening and closing signal **0** to the relay **2** RELAY_**02** and the opening and closing signal **1** to the relay **4** RELAY_**04** to a relay **7** RELAY_**07** to allow the inverter **2** INV **2** to supply power to the heating coil **3** WC **3** to the heating coil **5** WC **5** (S**200**). Also, in this case, the heating coil **3** WC **3** to the heating coil **5** WC **5** are connected in series.

FIG. **7** shows another example of connections of the heating coils and the relays. Namely, although the same amount of inverters, heating coils, and relays is provided, the induction heating cooking apparatus illustrated in FIG. **7** may have connections different from those of the induction heating cooking apparatus of FIG. **5**. Also, in this case, similarly, the control unit may output and closing signals to the relays connecting the heating coils corresponding to heating regions in which a vessel is placed, to heat the heating coils. Of course, a method for connecting the relays and the heating coils according to heating regions may be different from that of FIG. **6**.

FIG. **8** shows another example of connections of the heating coils and the relays. Namely, although the same amount of inverters, heating coils, and relays is provided, the induction heating cooking apparatus illustrated in FIG. **7** may have connections different from those of the induction heating cooking apparatus of FIG. **5** or FIG. **7**. Also, in this case, similarly, the control unit may output and closing signals to the relays connecting the heating coils corresponding to heating regions in which a vessel is placed, to heat the heating coils. Of course, number of cases may be different from that of FIG. **9**.

Referring to FIGS. **8** and **9**, the first inverter INV **1** and the second inverter INV **2** apply a high frequency voltage to the heating coils WC **1** to WC **5** through relays RELAY_**08** to RELAY_**14**, respectively.

A case in which a vessel is placed in a heating region handled by the heating coil **1** WC **1** will be described. Namely,

when the vessel is placed on the heating coil **1** WC **1**, a current value of the heating coil **1** WC **1** is changed, and when the changed current value is equal to or greater than a reference current value, it is determined that the vessel is placed in the heating region handled by the heating coil **1** WC **1** (S**100**). The heating coil **1** WC **1** receives power from the inverter **1** INV**1** and the heating coil **1** WC**1** and the inverter **1** INV**1** are connected by the relay **8** RELAY_**08**. Namely, the heating coil **1** WC **1** is connected to the inverter **1** INV **1** by the relay **8** RELAY_**08** (S**200**). In this case, the control unit outputs an opening and closing signal **1** to the relay **8** RELAY_**08**. Thereafter, the induction heating cooking apparatus receives a control command with respect to the vessel from the user (S**300**), and generates a control signal according to the control command to drive the inverter **1** INV **1** (S**400**).

Similarly, in the case of the heating coil **2** WC **2**, the control unit outputs an opening and closing signal **1** to the relay **9** RELAY_**09**. Namely, when it is detected that a vessel is placed on the heating coil **2** WC **2** (S**100**), the induction heating cooking apparatus connects the heating coil **2** WC **2** to the inverter **1** INV **1** by the relay **9** RELAY_**09**, and supplies power to the heating coil **2** WC **2** (S**200**).

Meanwhile, the heating coil **3** WC **3** may be connected to the inverter **1** INV **1** by a relay **10** RELAY_**10** and a relay **14** RELAY_**14**, or may be connected to the inverter **2** INV **2** by a relay **11** RELAY_**11** and the relay **14** RELAY_**14**. In is order to heat the heating coil **3** WC**3**, the control unit outputs the opening and closing signal **1** to the relay **10** RELAY_**10** and the opening and closing signal **0** to the relay **14** RELAY_**14**, respectively.

The heating coil **4** WC **4** and the heating coil **5** WC **5** receive power from the inverter **2** INV **2**. In order to heat the heating coil **4** WC **4**, the control unit outputs the opening and closing signal **1** to the relay **12** RELAY_**12**, and in order to heat the heating coil **5** WC **5**, the control outputs the opening and closing signal **1** to the relay **13** RELAY_**13**, respectively.

When it is detected that the vessel is placed to extend over the heating coil **3** WC **3** to the heating coil **5** WC **5** (S**100**), the induction heating cooking apparatus connects the heating coil **3** WC **3** and the heating coil WC **4** to the inverter **2** INV **2** through relays (S**200**). In this case, the control unit outputs opening and closing signals to the corresponding relays. Namely, the control unit outputs the opening and closing signal **1** to the relay **11** RELAY_**11**, the opening and closing signal **1** to the relay **12** RELAY_**12**, the opening and closing signal **1** to the relay **14** RELAY_**14**, in order to connect the heating coil **3** WC **3** and the heating coil **4** WC **4** to the inverter **2** INV **2**. Thereafter, the induction heating cooking apparatus drives the inverter **2** with respect to the heating coil **3** WC **3** and the heating coil **4** WC **4** according to a control command from the user (S**300** and S**400**).

As described above, the induction heating cooking apparatus and the control method thereof according to embodiments of the present invention can effectively heat a vessel regardless of a position of a vessel by using a plurality of heating coils. In the embodiments of the present invention, a plurality of heating coils are connected to a smaller amount of inverters through relays, whereby only a heating coil on which a vessel is placed, among the plurality of heating coils, may be heated. Also, by connecting the heating coils in series, a current flowing in the heating coil can be lowered, and thus, a rated current of the inverter can be lowered. In the embodiments of the present invention, relays and heating coils are connected such that a larger amount of heating coils are operated, while minimizing the amount of inverters, whereby manufacturing cost can be reduced, operation efficiency can be increased, and stability of the cooking apparatus can be enhanced.

The foregoing embodiments and advantages are merely exemplary and are not to be considered as limiting the present disclosure. The present teachings can be readily applied to other types of apparatuses. This description is intended to be illustrative, and not to limit the scope of the claims. Many alternatives, modifications, and variations will be apparent to those skilled in the art. The features, structures, methods, and other characteristics of the exemplary embodiments described herein may be combined in various ways to obtain additional and/or alternative exemplary embodiments.

As the present features may be embodied in several forms without departing from the characteristics thereof, it should also be understood that the above-described embodiments are not limited by any of the details of the foregoing description, unless otherwise specified, but rather should be considered broadly within its scope as defined in the appended claims, and therefore all changes and modifications that fall within the metes and bounds of the claims, or equivalents of such metes and bounds are therefore intended to be embraced by the appended claims.

What is claimed is:

1. An induction heating cooking apparatus, comprising:

a heater including a plurality of heating coils that forms a plurality of heating regions and that heats a vessel placed in each of the plurality of heating regions, respectively;

a plurality of inverters that supplies a drive voltage to one or more of the plurality of heating coils;

a sensor that senses a current of the plurality of heating coils and outputs a current value;

a controller that compares the current value with a predetermined reference current value, detects one or more of the plurality of heating regions in which the vessel is placed based on a comparison result and controls the plurality of inverters according to a control command; and

a plurality of relays that connects the one or more of the plurality of heating coils corresponding to the one or more of the plurality of heating regions detected by the controller and one or more of the plurality of inverters based on respective opening and closing signals, wherein the plurality of heating coils connectable to a same inverter of the plurality of inverters, among the plurality of heating coils corresponding to the detected one or more of the plurality of heating regions, are connected in series to each other by the plurality of relays.

2. The induction heating cooking apparatus of claim **1**, wherein a number of the plurality of inverters is less than a number of the plurality of heating coils.

3. The induction heating cooking apparatus of claim **2**, wherein each of the plurality of inverters is connected to some of the plurality of heating coils in order to supply the drive voltage thereto.

4. The induction heating cooking apparatus of claim **1**, wherein each of the plurality of inverters is one of a half-bridge type inverter, a full-bridge type inverter, or a Class E type inverter.

5. The induction heating cooking apparatus of claim **1**, wherein each of the plurality of heating coils is a flat litz wire type heating coil.

6. The induction heating cooking apparatus of claim **5**, wherein the flat litz wire type heating coil is formed by compressing a circular litz wire type heating coil.

7. The induction heating cooking apparatus of claim 6, wherein the heater further includes a plurality of resonance capacitors connected to the plurality of heating coils to generate a resonance.

8. An induction heating cooking apparatus, comprising:

a converter that converts an input voltage from a commercial AC power source into a DC voltage and outputs the DC voltage;

a smoothing device that smoothes the DC voltage output from the converter;

heater including a plurality of heating coils that forms a plurality of heating regions and that heats a vessel placed in each of the plurality of heating regions, respectively, and a plurality of resonance capacitors connected to the plurality of heating coils to generate a resonance;

a plurality of inverters that converts the smoothed DC voltage from the smoothing device into a drive voltage based on a control signal, and supplies the drive voltage to one or more of the plurality of heating coils;

an input that receives a control command with respect to the heater;

a sensor that senses a current of the plurality of heating coils and outputs a current value;

a controller that compares the current value with a predetermined reference current value, detects one or more of the plurality of heating regions in which the vessel is placed based on a comparison result, and generates the control signal for controlling the plurality of inverters according to the control command; and

a plurality of relays that connects the one or more of the plurality of heating coils corresponding to the one or more of the plurality of heating regions detected by the controller and one or more of the plurality of inverters, based on respective opening and closing signals, wherein the plurality of heating coils connectable to a same inverter of the plurality of inverters, among the plurality of heating coils corresponding to the detected one or more of the plurality of heating regions, are connected in series to each other by the plurality of relays.

9. The induction heating cooking apparatus of claim 8, wherein the heater comprises:

a first coil device including two or more heating coils of the plurality of heating coils driven by a first inverter of the plurality of inverters, connected in series, and forming a first heating region of the plurality of heating regions;

a second coil device including two or more heating coils of the plurality of heating coils driven by a second inverter of the plurality of inverters, connected in series, and forming a second heating region of the plurality of heating regions; and

a third coil device including one or more heating coils of the plurality of heating coils driven by the first inverter or the second inverter and connected to the first coil device or the second coil device in series or directly connected to the first inverter or the second inverter to form a third heating region of the plurality of heating regions.

10. The induction heating cooking apparatus of claim 8, wherein each of the plurality of heating coils is a flat litz wire type heating coil.

11. The induction heating cooking apparatus of claim 10, wherein the flat litz wire type coil is formed by compressing a circular litz wire type heating coil.

12. A method for controlling an induction heating cooking apparatus including a heater including a plurality of heating coils that forms a plurality of heating regions and that heats a vessel placed in each of the plurality of heating regions, respectively, a plurality of inverters that supplies a drive voltage to one or more of the plurality of heating coils, and a plurality of relays, the method comprising:

sensing a current of the plurality of heating coils and outputting a current value;

comparing the current value with a predetermined reference current value;

detecting one or more of the plurality of heating regions in which the vessel is placed based on a comparison result;

connecting one or more of the plurality of heating coils corresponding to the one or more of the plurality of heating regions and one or more of the plurality of inverters by the plurality of relays;

receiving a control command; and

driving a corresponding one or more of the plurality of inverters according to the control command, wherein the plurality of heating coils connectable to a same inverter of the plurality of inverters, among the plurality of heating coils corresponding to the detected one or more of the plurality of heating regions, are connected in series to each other by the plurality of relays.

13. The induction heating cooking apparatus of claim 1, wherein each of the plurality of inverters includes a switching device.

14. The induction heating cooking apparatus of claim 13, wherein the switching device is a high frequency semiconductor.

15. The induction heating cooking apparatus of claim 13, wherein the switching device is one of a bipolar junction transistor (BJT), a metal oxide semiconductor field effect transistor (MOSFET), or an insulated gate bipolar transistor (IGBT).

16. The induction heating cooking apparatus of claim 13, wherein the switching device of each of the plurality of inverters is switched based on a drive signal from a respective drive of a plurality of drives.

17. The induction heating cooking apparatus of claim 16, wherein the plurality of drives receives a control signal from the controller, respectively, to regulate heating of the plurality of heating coils according to the control command.

* * * * *