Jan. 4, 1944. C. M. TUTTLE ET AL 2,338,605

VARIABLE SPEED DRIVE FOR WEB FEEDING APPARATUS

Filed May 22, 1941 5 Sheets-Sheet 1

FIG. 1

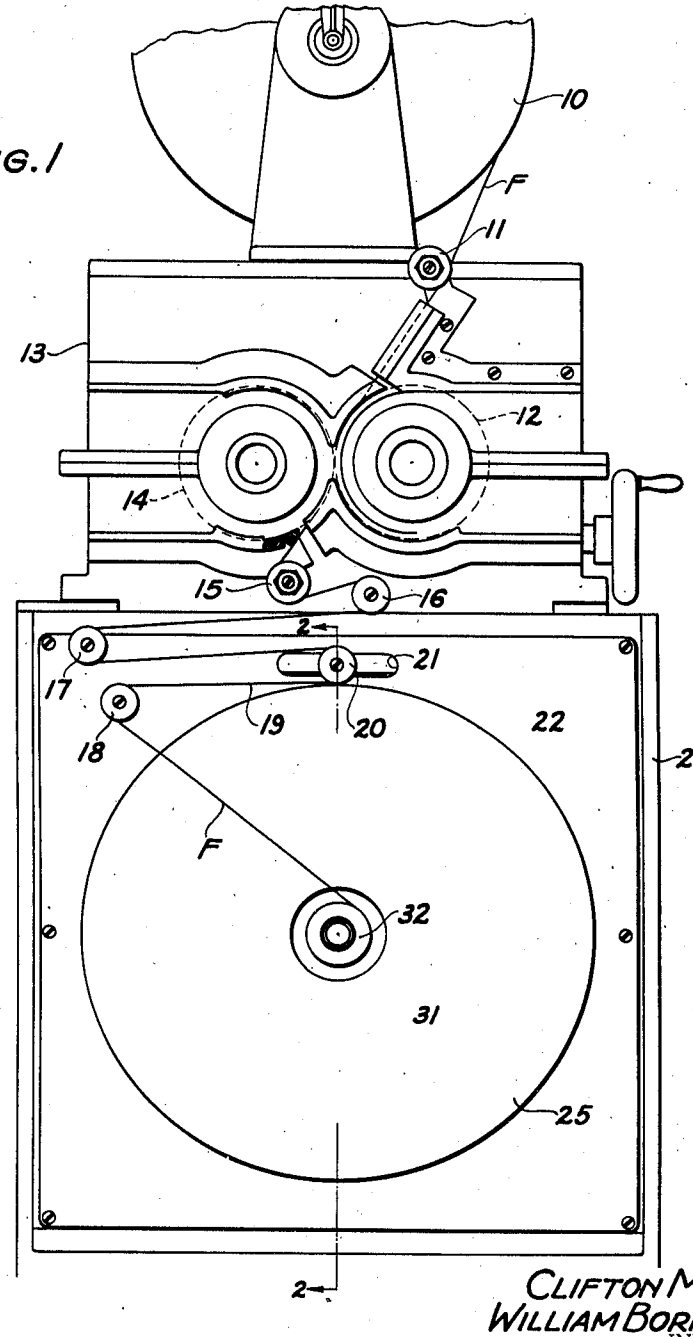

CLIFTON M. TUTTLE
WILLIAM BORNEMANN
INVENTORS

BY Newton M Perrins
Earl T. Haramore
ATTORNEYS

Jan. 4, 1944. C. M. TUTTLE ET AL 2,338,605

VARIABLE SPEED DRIVE FOR WEB FEEDING APPARATUS

Filed May 22, 1941 5 Sheets-Sheet 2

FIG. 2

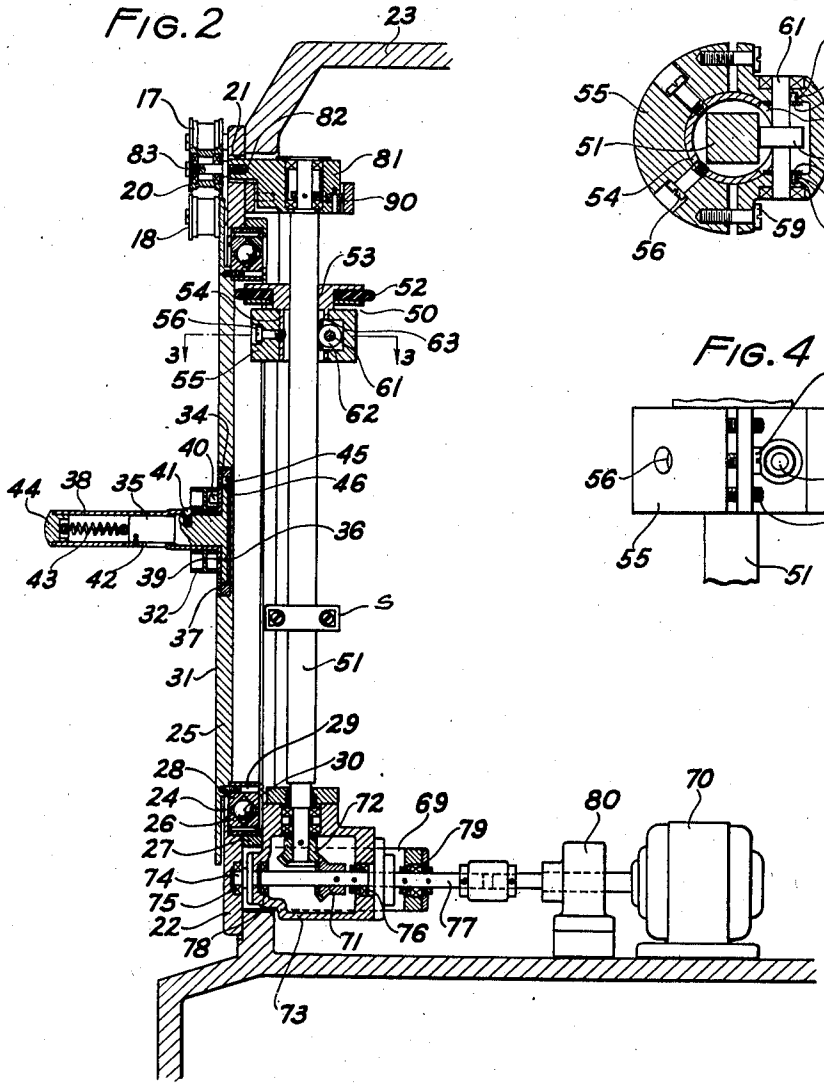

FIG. 3

FIG. 4

CLIFTON M. TUTTLE
WILLIAM BORNEMANN
INVENTORS

BY Clifton M. Tuttle & Clark T. Paramore
ATTORNEYS

Jan. 4, 1944. C. M. TUTTLE ET AL 2,338,605

VARIABLE SPEED DRIVE FOR WEB FEEDING APPARATUS

Filed May 22, 1941 5 Sheets-Sheet 3

FIG. 5

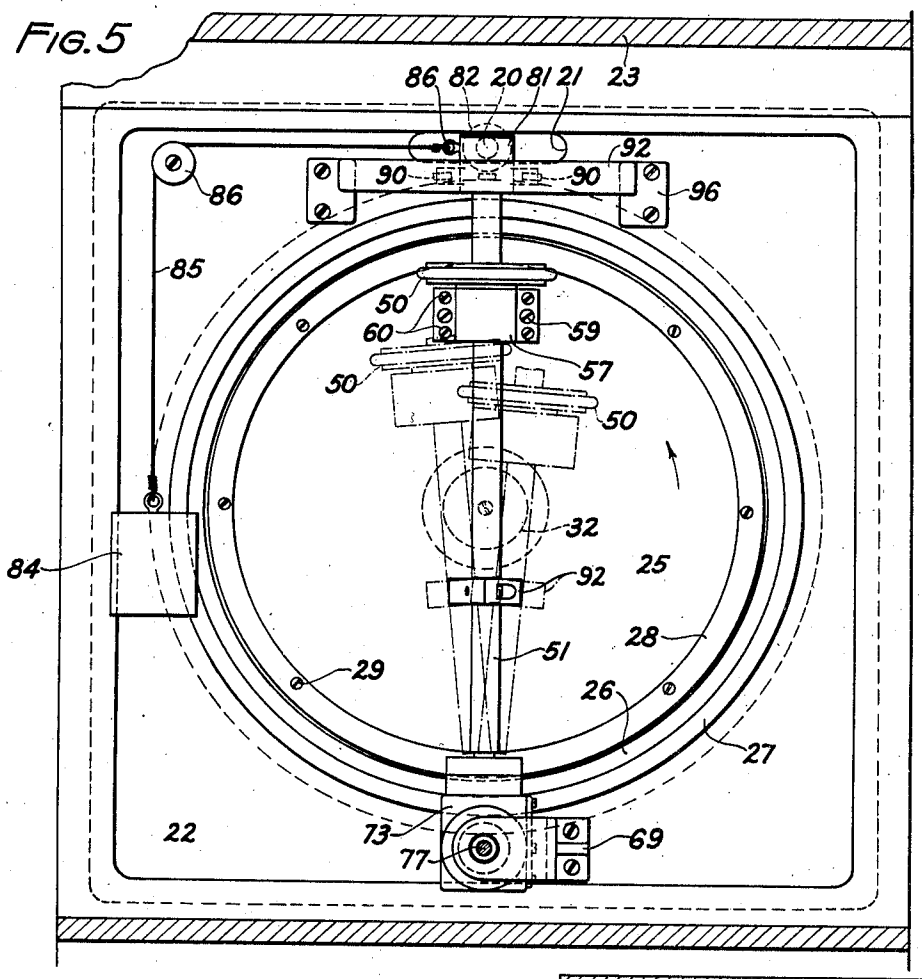

FIG. 6

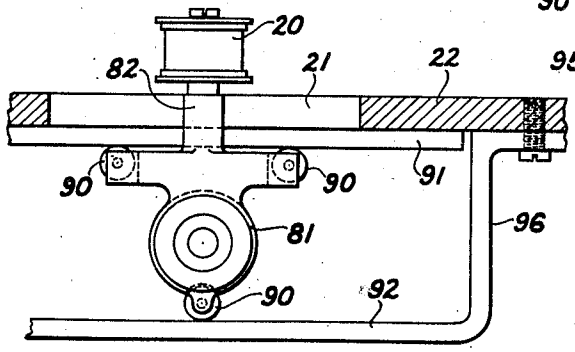

FIG. 10

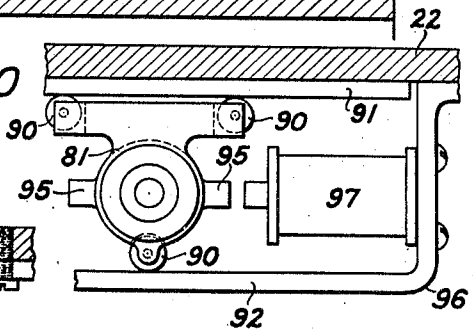

CLIFTON M. TUTTLE
WILLIAM BORNEMANN
INVENTORS

BY Newton M. Perrins
Karl F. Haramoy
ATTORNEYS

Jan. 4, 1944. C. M. TUTTLE ET AL 2,338,605

VARIABLE SPEED DRIVE FOR WEB FEEDING APPARATUS

Filed May 22, 1941 5 Sheets-Sheet 4

FIG. 7

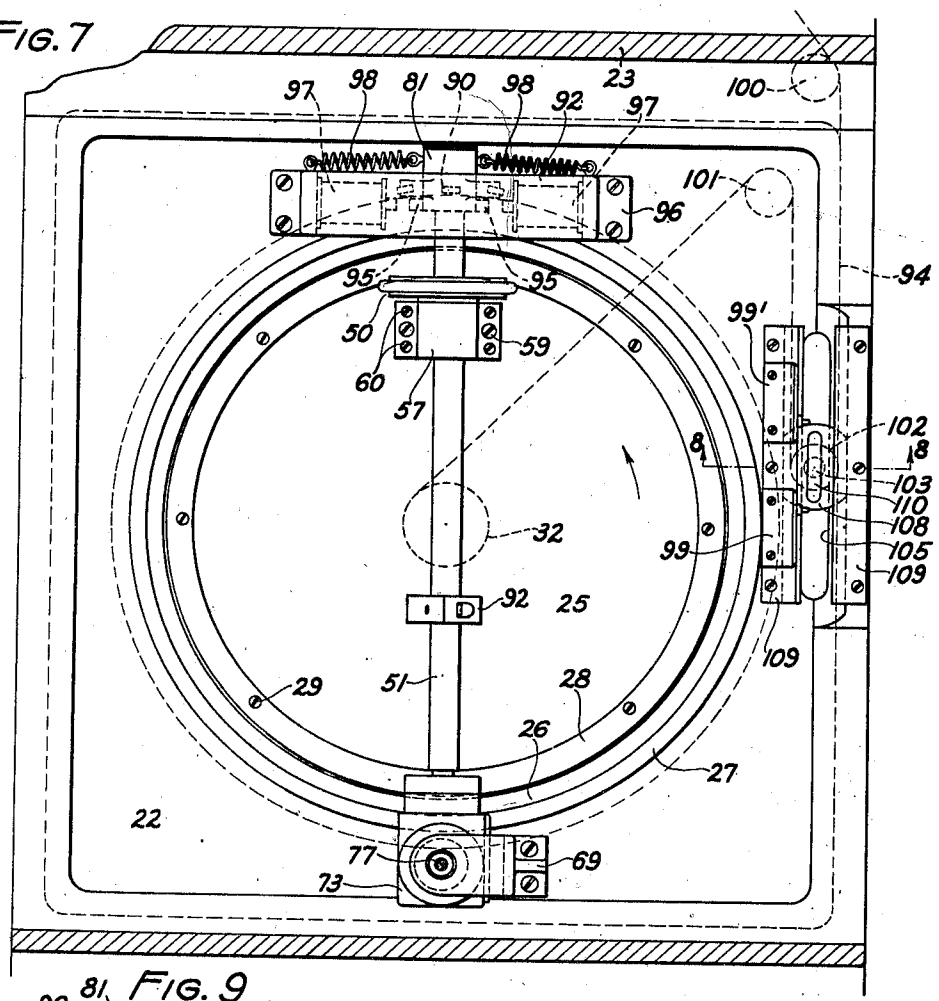

FIG. 9

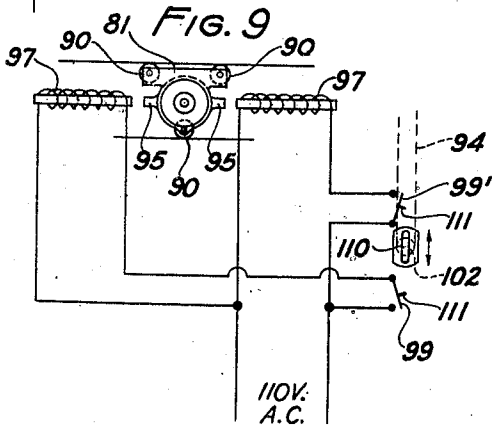

FIG. 8

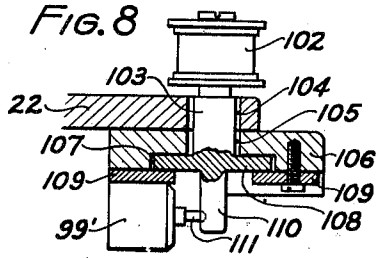

CLIFTON M. TUTTLE
WILLIAM BORNEMANN
INVENTORS

BY Newton M. Perrins
Earl T. Harrison
ATTORNEYS

Jan. 4, 1944. C. M. TUTTLE ET AL 2,338,605

VARIABLE SPEED DRIVE FOR WEB FEEDING APPARATUS

Filed May 22, 1941 5 Sheets-Sheet 5

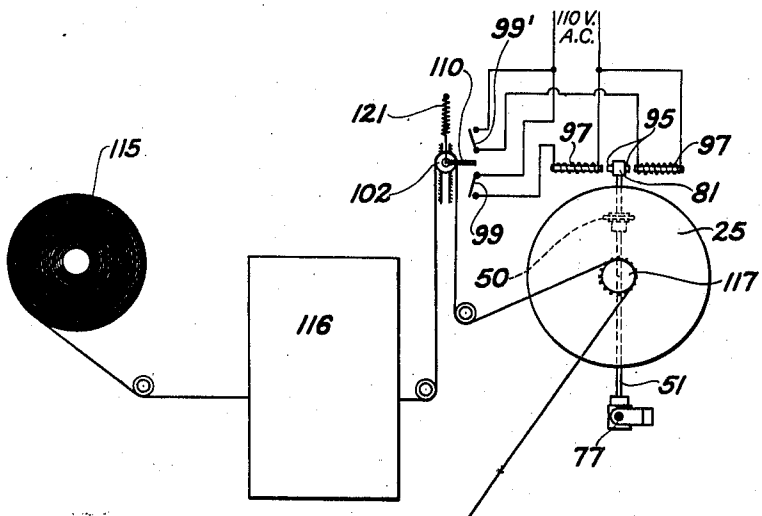

FIG. 11

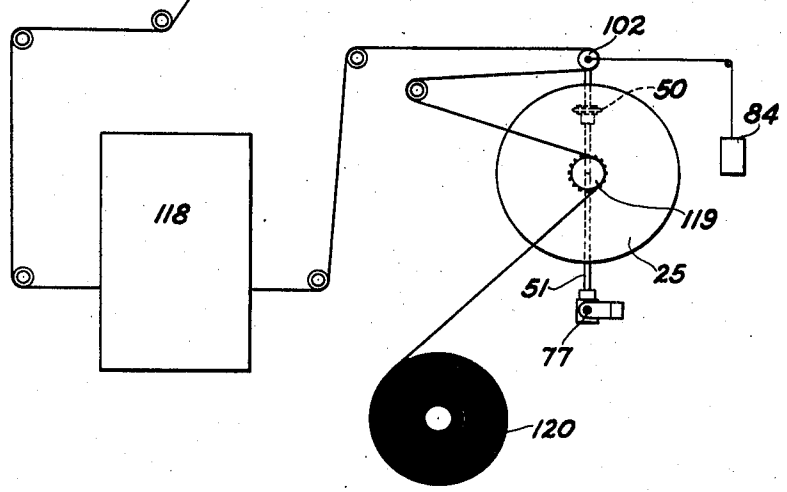

CLIFTON M. TUTTLE
WILLIAM BORNEMANN
INVENTORS

BY Newton M. Perrin
Paul J. Harmon
ATTORNEYS

Patented Jan. 4, 1944 2,338,605

UNITED STATES PATENT OFFICE

2,338,605

VARIABLE SPEED DRIVE FOR WEB FEEDING APPARATUS

Clifton M. Tuttle and William Bornemann, Rochester, N. Y., assignors to Eastman Kodak Company, Rochester, N. Y., a corporation of New Jersey

Application May 22, 1941, Serial No. 394,734

15 Claims. (Cl. 271—2.3)

The present invention relates to a web feeding mechanism, and particularly to a variable speed drive for such a mechanism which is adapted to be automatically adjusted by a change in tension in the web being fed for the purpose of feeding a web at high speed and at constant tension.

The prior art shows that it has been known for some time to provide a variable speed driving mechanism for feeding a web of material, which can be altered by a change in tension in the web being fed to maintain a constant tension in the web at all times. Such known arrangements have included cutting resistance into and out of the circuit of a driving motor by movement of a float roll supported in the loop of the web; moving a frictional driving member radially of the face of a driven friction disk in response to a caliper roll riding on the periphery of a take-up roll, etc. These known arrangements are unsatisfactory for feeding webs at high speeds, i. e., 100 feet per minute and upwards, first because they are not responsive enough to effect a needed change in the speed of the drive fast enough to maintain a constant tension in the web at all times, secondly, they are not sensitive to small changes in tension of the web, or thirdly, they require a caliper member constantly engaging the surface of the web, which engagement at high speed is detrimental to the surface of the web, particularly if the web has a surface which is susceptible to scratching, such as a film strip.

Therefore, one object of the present invention is to provide a variable speed drive for a web feeding mechanism which is adapted to maintain a constant tension in the web when driven at high speed, 100 feet per minute or more.

Another object is to provide a variable speed drive which is sensitive to small changes in tension in the web being fed, and responds rapidly to such changes in tension to be adapted for high-speed use.

A further object is to provide a variable speed drive which includes a variable transmission between the driving member and the driven member, the adjustment of which is controlled by a member movable in response to a change in tension in the web being fed.

Another object is to provide a variable speed drive including a driven disk and a driving member frictionally engaging the surface of the same and movable radially of the surface to change the angular velocity of the driven member, said driving member also being movable relative to the surface of the disk so that it will be moved along its axis radially of the disk due to the angle of contact between the two, rather than relying upon a member engaging the web to directly effect this movement of the driving member.

And yet another object is to tilt the axis of the driving member relative to the radius of the disk in response to a change in the tension in the web being fed.

A further object is to key the driving member to a shaft normally registering with the diameter of the driven disk so that it can move axially of said shaft, and pivot said shaft at a point on a line in register with said diameter, which point is located concentrically of the center of said disk and on the same side of said driving member as the center of said disk.

Another object is to connect the free end of the shaft with a member movably supported in a loop of the web so that a movement of said member due to a change in tension in the web will swing the shaft from its normal position to an abnormal position where it is tilted with respect to said diameter of the disk.

Another object is to normally hold the shaft in its normal position, and to move the same from said normal position by electro-magnetic means the energization of which is controlled by a member movable in response to a change in tension in the web from a given value.

And a still further object is to provide a variable speed drive which, although simple in structure and operation, is adapted to maintain a constant tension in a web when driven at speeds much higher than heretofore possible with known devices of this type.

And another object is to provide a variable speed drive of the type set forth in which the actual work of adjusting the drive is not required of any member supported by or engaging the web being fed, whereby the surface of the web is not damaged even when fed at high speeds; nor is the web subjected to a force longitudinally of the same which might rupture the same.

The novel features that we consider characteristic of our invention are set forth with particularity in the appended claims. The invention itself, however, both as to its organization and its methods of operation, together with additional objects and advantages thereof, will best be understood from the following description of specific embodiments when read in connection with the accompanying drawings in which,

Fig. 1 is a front elevation of a combined film perforator and wind-up station, the wind-up apparatus constructed in accordance with a preferred embodiment of the present invention to

wind up, under constant tension, a film fed to the wind-up at constant speed,

Fig. 2 is a section of the variable speed wind-up drive taken substantially on lines 2—2 of Fig. 1,

Fig. 3 is a section taken substantially on lines 3—3 of Fig. 2, and showing the manner of coupling the driving roller on the drive shaft therefor,

Fig. 4 is an elevation of the coupling between the driving roller and its drive shaft shown in section in Fig. 3,

Fig. 5 is a rear elevation of the wind-up apparatus shown in Figs. 1 and 2,

Fig. 6 is an enlarged detail, partly in section and partly in elevation, and showing the manner of mounting the free end of the drive shaft for free swinging movement,

Fig. 7 is a rear elevation of the wind-up apparatus, and showing another embodiment of the shaft swinging means, including electro-magnetic means for moving the shaft from its normal position in response to movement of a member supported by a loop in the film,

Fig. 8 is a section taken substantially on lines 8—8 of Fig. 7,

Fig. 9 is an electrical wiring diagram of the embodiment shown in Fig. 7,

Fig. 10 is an enlarged detail, partly in section and partly in elevation, and showing the relation of one armature on the free end of the drive shaft to its corresponding electro-magnetic means, and

Fig. 11 is a schematic layout of a path of a web and feeding means therefor, showing that the variable speed drive constituting the present invention is not limited to a wind-up apparatus, but is adapted for driving any film-feeding member the speed of which must be regulated to maintain a constant tension in the web being fed.

Like reference characters refer to corresponding parts throughout the drawings.

The problem of feeding a web of material at a constant speed and at a constant tension at times requires a variable speed drive for the web feeding member which is adjusted in accordance with changes in tension in the web being fed. Probably the most obvious illustration of the requirements of such a drive is where the web after passing through a machine where it is operated on in some manner and is fed therefrom at a constant rate is directly wound up on a driven take-up roll. It will be readily understood by one skilled in the art that the angular velocity of the take-up roll will necessarily have to be decreased progressively as the web is wound up due to the increased diameter of the take-up roll, and to give this result a variable speed drive of the take-up roll is required. A common form of variable speed drive for take-ups of this nature comprise a driven disk connected to the take-up shaft and driven by a driving roll frictionally engaging the surface of said disk and movable radially thereof to change the angular velocity of the driven member. In known devices of this kind the driving member was moved radially of the driven member by the movement of a member engaging the surface of the web either before it reached the take-up roll or after it was wound upon the same with the result that the web was subjected to a considerable amount of force and abrasive action which precluded its use with high-speed web feeds, particularly in cases where the web is a film which is very susceptible to scratching and upon which the presence of scratches is very detrimental and very often necessitates the film being thrown away. These known arrangements for adjusting a drive of this sort were further incapable of handling webs fed at high speeds, i. e., 100 feet per minute and upward, because they were not sufficiently sensitive to small changes in tension in the web, and were incapable of responding quickly enough to changes in tension when they were detected to correct the speed of the drive to account for such changes.

The present invention is not directed to the type of variable speed drive set forth broadly but to a method of adjusting the speed thereof which is quick to respond to changes in tension of the web, is sensitive to the slightest changes in tension in the web, and requires no unusual force or abrasive action on the web being fed, whereby the same is particularly adapted to handle webs moved at high speeds. While the novel variable speed drive constituting the present invention is particularly adapted to driving a wind-up roll the angular velocity of which must be constantly changed in accordance with an increase in the diameter of the roll, it is not limited to such an application. As will be clearly set forth in the following description, this drive is also adapted for driving web feeding members located at any point in a path of a web between a supply and wind-up roll where it is desirable or necessary to feed the webs at constant speed and constant tension. Although we have shown the variable speed drive constituting the present invention as being associated with an apparatus for handling a photographic film, it is to be understood that this application of the drive is for the purpose of illustration only, and that it could be used to feed a web of any material regardless of its character and the work performed upon it during its movement over a given path.

To clearly illustrate the application of our novel variable speed drive we have shown it applied directly to a wind-up roll which receives a web from a machine which feed the web to the wind-up roll at a constant speed. The machine we have chosen to illustrate as a constant speed source is a film perforating machine, a full description of which is contained in our United States Patent 2,206,133, issued July 2, 1941, and which machine forms no part of the present invention except to show a source for supplying film to the wind-up mechanism at a constant speed.

Referring now to the drawings, and particularly Figs. 1–6, the web, or film F in this case, passes downwardly from a supply roll 10 over a guide pulley 11 into contact with a periphery of the die roll 12 in the film perforator 13. Perforations are cut in the film F by the punches carried by the roll 14 and the die roll 12. The film as it is perforated moves away from the roll 14 over guide pulleys 15, 16, 17, and 18 and forms a loop 19 in which is positioned a floating roller 20 which is free to move along the slot 21 in the plate 22 fixed to the front of the frame 23 of the perforator 13 as the tension on the film changes. A further description of the purpose and structure associated with this floating roller 20 will be described hereinafter.

The plate 22 is provided with a circular aperture 24 slightly larger in diameter than the driven disk 25, see Fig. 2. A ball race 26 is secured to the plate 22 around the edge of the circular aperture therein by means of a flanged ring 27

fixed to the plate in any suitable manner. Cooperating with the ball race 26 is a second ball race 28 fixed to the rear face of the driven disk 25 by screws 29, whereby the cooperation between the races and the balls 29 therein serve to rotatably mount the driven disk 25 on the plate 22.

Extending from the outside face 31 of the driven disk 25 is a supporting structure for the film core 32, and to which core the end of the film F to be wound up is attached in any suitable manner. The supporting structure of the film core comprises a flanged insert 34 seated in a recess in the outside face of the driven disk 25 and fixed thereto, in any suitable manner, to rotate therewith. A stub-shaft 35 is held in the insert 34 by having the flange 36 thereon rotatably seated in said insert and confined therein by a locking ring 37 fixed to the ends of the flanges of said insert and overhanging the flange 36 on the stub-shaft. Slidably mounted on the end of said stub-shaft is a tubular shaft 38 including a flange 39 at its inner end normally lying flush with the outside face of the driven disk. Said flange has a driving pin 40 extending therefrom which is adapted to engage a recess in the film core 32 when the same is slipped onto the tubular shaft 38.

The film core is adapted to be held on the tubular shaft by a spring-pressed ball 41 normally extending through a slot in the shaft. The tubular shaft 38 is drivingly connected to the stub-shaft 35 by a key 42 thereon engaging a keyway in the latter shaft. The tubular shaft 38 can be manually slid outwardly on the stub-shaft by a straight pull on the same to move the film core from the face of the driven disk to facilitate its removal when full, and the tubular shaft is normally held in a retracted position by a tension spring 43 connected between the end of the stub-shaft and a cap 44 fixed in the outer end of the tubular shaft. The driving connection between the driven disk and the tubular shaft 38 preferably constitutes a one-way clutch so that the operator may rotate the film core by manually turning the tubular shaft during the threading operation without having to rotate the driven disk and the driving mechanism therefor. To this end we have shown a roller 45 fixed to the locking ring 37 and extending into engagement with a cam-faced recess 46 formed in the periphery of the flange 36 on the stub-shaft 35. Inasmuch as one-way clutch arrangements of this nature are well known in the art a detailed showing of the same is deemed unnecessary. It will suffice to say, that when the driven disk 25 is rotated in the proper direction by a driving means, to be fully described hereinafter, the one-way clutch will pick up stub-shaft 35 and drive the same along with the tubular shaft 38 keyed thereto. However, the one-way clutch between the stub-shaft and the driven disk will permit the stub-shaft, and the mechanism drivingly connected thereto, to be rotated relative to the driven disk by hand for threading purposes.

The driven disk 25 is adapted to be driven by a driving member frictionally engaging the inner surface of the same, and capable of movement substantially radially of the driven member to one side of the center thereof to vary the angular velocity of the driven disk. To this end, the driving roller 50 is mounted on a shaft 51 so as to rotate therewith but being capable of movement axially thereof. The shaft 51 is located to the rear of the driven disk, is substantially parallel thereto, and normally extends diametrically of said driven disk. The driving roller 50 is maintained in frictional driving engagement with the rear face of the driven disk, and is fabricated of a material which will give a good friction drive. We have found that rubber makes a good frictional driving surface, and have, consequently, shown the driving roller 50 as having a rubber tire 52 which actually engages the rear face of the driven disk 25.

Although the driving roller 50 may be connected to the shaft 51 by a simple key and keyway connection to permit the driving roller to move axially of the shaft and at the same time be rotated thereby, we have found that the following connection between the roller and shaft is better adapted for our novel variable speed drive for reasons which will be fully set forth hereinafter. Referring to Figs. 2, 3, and 4, we have shown the drive shaft 51 as being square in cross section instead of round as is the usual construction. The roller proper is provided with a square bore 53 through which the shaft extends, and a tubular extension 54 surrounding, but not contacting, the faces of the shaft. A semi-circular block 55 is fastened to the tubular extension 54 by one or more screws 56, and a bearing block 57 engaging the other side of the tubular extension is fastened to block 55 by a pair of adjustable clamping screws 59, and four set screws 60, two on each side of the block, see Figs. 3 and 4.

Journaled at opposite ends in bearings in the bearing block 57 is an axle 61 to which is fixed a roller 62 adapted to engage one face of the shaft 51, said roller extending through a cut-out portion 63 in the tubular extension 54. Inasmuch as the shaft 51 extends in a vertical direction, a force tending to move the driving roller outwardly on the driven disk must overcome the weight of the roller; while when the roller moves inwardly of the disk, the weight of the roller will assist the force so tending to move the roller. Therefore, to overcome the effect of the weight of the roller, and to require approximately the same force to move it in both directions along the shaft, a resistance must be introduced to oppose movement of the roller inwardly of the shaft to a given degree. We accomplished this by placing a one-way clutch arrangement between each end of the axle 61 and the bearing block 57. Referring to Fig. 3, this one-way clutch may comprise a roller 65 held in a cam-faced recess 66 in the bearing block adjacent each end of the axle by a plate 67, each of the rollers 65 being in rolling engagement with the axle and the cam face of the recess. The cam face of the recess 66 will, of course, be such that the axle can rotate freely when the driving roller is moving outwardly of the driven disk, but will lock the axle when the driving roller tends to move inwardly of the disk, whereupon the roller 62 will have to slide on the face of the shaft rather than roll on the same. The frictional resistance set up by the sliding of the roller 62 over the shaft rather than rolling over the same will be of such degree as to overcome the effect of the weight of the driving roller upon the force required to move it in opposite directions along the drive shaft 51. The setscrews 60 are provided so that the bearing block 57 can be tilted relative to the block 55 to obtain the desired engagement between the roller 62 and the face of the shaft engaded thereby.

We have found that this one way clutch ar-

rangement for the axle 61 provides an adjustable frictional damping to prevent overshooting and "hunting" of the driving roller which "hunting" tendency is independent of the weight of the roller for the reason that it is evident even when the shaft 51 extends in a horizontal direction. A transmission device of the type set forth will have a normal tendency to wind-up or unwind a web faster than a given speed depending upon whether or not it is being used in a wind-up or un-winding mechanism. When the driving roller is perfectly free to move in either direction along the shaft 51 we have found that due to this normal tendency for the transmission to overdrive this roller has a tendency to "hunt" an overshoot along the shaft in the direction corresponding to the overdrive with the result that the speed of the device becomes unsteady to an extent which ofttimes renders the same impractical. This above described frictional damping device is arranged so that it will frictionally restrain movement of the roller along the shaft 51 in the direction corresponding to the overdrive tendency but is free to move in the opposite direction so as to permit the arrangement to quickly assume a state of equilibrium when the speed of the drive has been corrected. The frictional dampening device for the roller 52 is such that it can be adjusted to account for the overdrive tendency of the particular mechanism with which it is to be used.

In known web feeding apparatus making use of the variable speed drive of the type set forth, the driving roller is moved radially of the driven disk by movement of a member engaging the surface of the web so that the force required to move the driving roller emanates from the pressure between a movable member and the web. This procedure results in the web being subjected to destructive forces which very often cause a rupture of the web, or cause the surface of the web to be abraded to an extent that it cannot be used.

In accordance with the primary object of our invention we provide a means for moving the driving roller along the shaft radially of the disk wherein the force for so moving the driving roller emanates from the engagement between the disk and the roller, whereby the web being fed is not relied upon for this force and is not subjected to the stress and abrasion incident thereto. Referring to Fig. 5, and assuming that the driving roller 50 and the disk are driven in a counter-clockwise direction as indicated by the arrow, we have found that if the shaft is tilted counter to the direction of rotation of the disk from a normal position, see dotted line position to right in Fig. 5, wherein it lies along a diameter of the disk and the driving roller lies tangent to a driving circle on said disk, see full line position, that the driving force between the driving roller and the disk will be broken up into two components of force, one tending to drive the disk and the other tending to move the driving roller outwardly of the disk along the shaft 51. The result of such a tilting of the driving roller will be that the roller will move out on its shaft and will gradually reduce the angular velocity of the disk.

On the other hand, if the drive shaft 51 is tilted from its normal position in the direction of rotation of the disk, see dotted line position to left in Fig. 5, the driving force between the roller and the disk will be broken up into two component forces one of which will tend to drive the disk and othe other of which will tend to move the driving roller inwardly of the disk along the drive shaft. Such a movement of the driving roller will necessarily cause an increase in the angular velocity of the disk. The breaking up of the driving force between the driving roller and the driven disk into the two components of force mentioned necessarily depends upon the driving roller being moved to a position wherein it will engage the driven disk at an angle to the tangent of any driving circle on the disk, because if the driving roller engages the driven disk tangent to a driving circle of the disk the driving force will all be applied to rotate the disk and would not be broken up into the mentioned components of force, one of which causes the roller to "hunt" along the shaft. It necessarily follows that the component of force tending to move the roller along its shaft will vary in proportion to the degree of inclination between the roller and a tangent of any driving circle of the disk, so that the more the shaft is inclined from its normal position the faster will be the movement of the driving roller along the shaft radially of the disk.

When the driving roller is in its normal position, full-line position of Fig. 5, and its axis is in register with the diameter of the disk, the driving roller is engaging the driven disk tangent to a driving circle of the disk, and its driving force will be fully expended to drive the disk so that there will be no tendency for the roll to "hunt" along the shaft. By "hunting" we refer to the tendency of the driving roller to move along a shaft due to the shaft being inclined to its normal position. The shaft for the driving roller may be pivoted to swing about any point along a line in register with the diameter of the disk so long as said pivot point is eccentric to the center of the disk. It will be readily appreciated by one skilled in the art that if the shaft were pivoted to swing about a point in register with the center of the disk it would form a radius of the disk and the driving roller carried thereby would never become inclined to the tangent of a driving circle that it might engage on the disk with the result that the desired "hunting" of a roller along its shaft would not be obtained.

We have designed a variable speed drive making use of this "hunting" phenomenon of the driving roller over the face of the driven disk to automatically vary the speed of the drive in response to changes in tension in the web being fed thereby. The primary advantage of such an arrangement is found in the fact that the force required to move the driving roller radially of the face of the driven disk does not emanate from pressure on the web, and other advantages, no less important, include the fact that such a variable transmission is very sensitive to small changes in tension in the web and responds rapidly to such changes in tension so that the arrangement is adapted for use with web feeding speeds much higher than heretofore deemed practical.

In the preferred embodiment of the variable speed drive shown, the drive shaft 51 is driven by an electric motor 70 through beveled gears 71 and 72. To permit the drive shaft 51 to tilt relative to the diameter of the disk, the lower end of the shaft is journaled in a gear box 73 which is in turn journaled at one end by a stub-shaft 74 extending therefrom engaging the bearing 75 in the rear face of the plate 22, and at the other end on a bearing 76 on the motor shaft 77. The free end of the motor shaft is journaled in a bearing 78 in the end wall of the gear box

and is further supported intermediate its length by a bearing 79 carried by a bracket 69 fixed to the end plate 22 and by a pillow block 80 adjacent the motor. The pivot point on the drive shaft is in effect the stub-shaft 74 which is located on a line in register with the diameter of the driven disk.

The upper end of the drive shaft 51 is journaled in, and carries, a block 81 having a projection 82 extending through the slot 21 in the plate 22, and to the end of which the roller 20 is rotatably fixed by a screw 83. The roller 20 is the one located in the loop 19 of the film so that the tension in the film will tend to swing the drive shaft to the right looking at Fig. 5, or to the left looking at Fig. 1. The drive shaft 51 is normally pulled in the other direction by a counter-weight 84 acting through a cord 85 fastened thereto and passing over a guide roller 86 to an eye fixed to the block 81. The weight of the counter-weight 84 is such that it causes, and will balance, a given tension to be applied to the film being wound. So long as the tension in the web stays at the given value the drive shaft 51 is held in its normal position wherein it lies along the diameter of the driven disk 25 and the force of the driving roller is applied tangently of the driving circle of the disk engaged thereby. If, however, the tension in the web increases above the given value, the loop 19 is shortened and pulls the drive shaft to the right, referring to Fig. 5, or counter to the direction of rotation of the driven disk, whereupon the driving force of the driving roller is applied at an angle to the tangent of the driving circle of the disk. This tilting of the driving roller causes the driving force thereof to be broken up into two components of force, one of which tends to move the roller outwardly of the disk where the angular velocity of the same is reduced. When the angular velocity has been reduced to overcome the excess tension in the web, the drive shaft will be permitted to swing back to its normal position under the action of the counter-weight, and in which position the driving roller will not "hunt" until the tension in the web again varies from the given value.

On the other hand, if the tension in the web being fed falls below the given value, the counter-weight 84 will pull the drive shaft to the left, or in the direction of rotation of the disk. In this position of the shaft the driving roller will again be inclined to the tangent of a driving circle on the disk, and in this position the driving force of the driving roller will be broken up into two components of force one of which will act in the direction of the shaft to move the driving roller inwardly of the disk where it will increase the angular velocity of the disk. As soon as the disk has been temporarily speeded up to overcome the decrease in tension in the web and bring it back to the given value, the shaft will be returned to its normal position wherein the driving roller will engage the disk at a tangent to the driving circle of the disk it engages at any time.

It takes very little force to swing the drive shaft 51 laterally of the driven disk 25 because the roller tends to roll on the disk. And to further facilitate such movement of the shaft, rollers 90 are rotatably mounted on the block 81 on the upper end of the shaft to ride along tracks 91 and 92 fixed to the rear face of the plate 22, see Fig. 6. Due to the fact that the drive shaft 51 is so readily moved laterally of the face of the driven disk, this variable speed drive is very sensitive to small changes in tension in the web being fed, and its adjustment does not require that any undue pull, or surface pressure, be applied to the web to effect an adjustment thereof. The actual force required to adjust the speed of the transmission emanates from the engagement between the driving roller and the driven disk and not from a pull or pressure on the web, so that the web is not subjected to damaging wear or stress of any kind while being fed. The rapidity and degree of the "hunting" action of the driving roller over the driven disk varies in proportion to the inclination of the drive relative to its normal position, and it has been found to respond rapidly enough to permit the feeding of webs at speeds heretofore considered impractical when using known variable speed drives. To prevent the driving roller from ever moving inwardly of the drive shaft to a point where it would engage the disk on the opposite side of the center thereof, which would result in driving the disk in a reverse direction, the shaft is provided with an adjustable stop S. This stop is made adjustable so that it can be moved along the shaft to different positions radially of the disk to one side of the center thereof, it being readily appreciated by one skilled in the art that the starting, or fastest, angular speed required of the disk at any time will depend upon the diameter of the wind-up core being used and the speed at which the web is fed to the wind-up core.

In Figs. 7–10, another embodiment of the variable speed drive constituting the present invention will be described, and which differs from the preferred embodiment set forth in that the drive shaft 51 is inclined relative to its normal position by the action of electro-magnetic means energized in response to the movement of a member supported by the web being fed. In this arrangement the web is subjected to even less longitudinal stress and surface abrasions than in the preferred embodiment because the force necesary to swing the drive shaft does not emanate from the film itself. In the embodiment shown in Figs. 7–10 the major part of the drive is the same as that of the preferred embodiment previously described, and the parts thereof corresponding to parts in the described embodiment will be referred to by the same reference characters used in describing the parts thereof. This second embodiment differs from that described only in the means for swinging the drive shaft to and from its normal position, the roller 20, the film loop 19, and the counter-weight 84 being replaced by electro-magnetic means.

Referring now to Figs. 7–10, the block 81 on the free end of the drive shaft 51 is provided with rollers 90 riding on tracks 91 fixed to the plate 22, as in the previously described embodiment, but the block does not include the projection 82 and the roller 20 mounted thereon, see Figs. 6 and 10. Instead, the block 81 has a pair of armatures 95 diametrically disposed on opposite sides thereof in the direction of swing of the shaft 51. Mounted on each of the two arms of the bracket 96 forming part of one of the tracks 90 is an electro-magnet 97 adapted to cooperate with the armatures 95. The drive shaft 51 is normally held in its normal position along the diameter of the disk by the action of two tension springs 98, each fastened at one end to the block and at the other end to the arms of the bracket, see Fig. 7.

As clearly shown in Fig. 9, the circuit of each of the electro-magnets 97 includes a normally open switch 99 and 99', the switch 99' being in the circuit of the electro-magnet to the right of the shaft, looking at Fig. 7, and the switch 99 being in the circuit of the other electro-magnet. The film, or web, instead of being guided to provide a horizontal loop on the front of the plate 22 as in the other embodiment, is guided by rollers 100 and 101 to provide a vertical loop 94 in which the float roller 102 is supported. Referring to Fig. 8, this float roller 102 is rotatably mounted on the end of a stub-shaft 103 which extends through vertical slots 104 and 105 in the plate 22 and guide member 106, respectively, said guide member being mounted on the rear face of the plate 22 and including guiding recesses 107 into which wings 108 on stub-shaft 103 extend. The wings on the stub-shaft are slidably confined in the guiding recesses 107 by plates 109 fixed to the guide member and overhanging said wings. The weight of the float roller and its associated parts is such as to induce a given tension on the film, and will remain stationary relative to the guide therefor so long as the tension of the film remains constant at a given value.

Should the tension of the web increase above the given value, the float roller 102 will rise due to a shortening of the loop by which it is supported, and this will indicate that the film, or web, was being taken up at too fast a rate. On the other hand, if the tension of the film, or web, decreased below the given value, the loop in the web would lengthen, permitting the float roller to drop, and this would indicate the film was not being taken up fast enough. In order to permit this movement of the float roller 102 to automatically effect an adjustment of the speed of the drive, we mount the switches 99 and 99' above and below the stationary position of the float roller so that movement of the roller from its normal position will alternately cause the energization of the electro-magnets, whereby the shaft 51 will be swung in the proper direction from its normal position to overcome the deficiencies in the drive indicated by the movement of the float roller. We have chosen to show the switches 99 and 99' as a well-known type of micro-switch, and so mounted relative to the path of movement of the float roller 102, and its associated parts, that a finger 110 extending from the stub-shaft 103 is adapted to engage the operating member 111 of the switches and close the same. Micro-switches are particularly adapted to this use because only a minimum amount of force is required to operate the same.

Referring now again to Figs. 7–10, the operation of this last described embodiment will be explained. So long as the film, or web, being fed remains under a given tension, which the weight of the float roller 102 and its associated parts determines, the float roller will remain in the position shown in Fig. 7, and the switches 99 and 99' will remain open with the result that neither of the electro-magnets 97 will be energized. Therefore, the drive shaft 51 will be held in its normal position, best shown in Fig. 7, by the action of the two tension springs 98, and the driving roller 25 will engage the disk tangent to a given driving circle thereon. If the tension in the web should increase above the given value, indicating that the drive is too fast, the loop in the web will shorten and move the float roller 102 vertically upward, the finger 110 associated therewith will close switch 99', whereupon the electro-magnet to the right of the drive shaft 51 will be energized, and the field set up between the same and the armature 95 on the block 81 adjacent thereto will pull the drive shaft to the right, looking at Fig. 7, from its normal position. For the reasons previously set forth in describing the preferred embodiment of the invention, this will cause the driving roller 25 to "hunt" outwardly of the disk of the drive shaft with the result that the angular speed of the disk will be reduced. As soon as the angular speed has been reduced sufficiently to overcome the increased tension in the web, the loop in the web will lengthen thus permitting the float roller to drop to a position where it allows switch 99' to again open. As soon as the current to the electro-magnet is cut off, the springs 98 will swing the shaft to its normal position and hold it there until one of the electro-magnets is again energized to pull the shaft from that position.

Should the tension of the web decrease below the given value for any reason, indicating that the speed of the take-up is not fast enough, the loop in the web will lengthen and permit the float roller to drop from its normal position. In so dropping, the float roller causes the switch 99 to close whereupon the other electro-magnet is energized to tilt the drive shaft in the other direction, or in a direction of rotation of the driven disk, from its normal position. Such a tilting of the drive shaft will, as previously explained, cause the driving roller to "hunt" inwardly of the disk along the shaft to speed up the angular velocity of the disk. Again, as soon as the speed of the drive has been properly adjusted to correct for the change in tension in the web, the float roller 102 will be raised to its normal position permitting the switch 99 to open, whereupon the electro-magnet will be deenergized and the drive shaft will be returned to, and held in, its normal position by the spring 98 until another variation in tension of the web occurs.

It is a well-known fact that when a web is fed to a wind-up roll at constant speed, the angular velocity of the wind-up shaft has to be gradually reduced as the diameter of the wind-up roll increases in order to maintain a constant tension on the web at all times. For this reason, therefore, when a drive of the type described is used for driving a wind-up shaft, the drive shaft 51 will generally be more or less inclined from its normal position counter to the direction of the driven disk to account for this necessary gradual decrease in angular velocity of the driven disk. However, if for any reason the feed of the web to the wind-up core should not be constant, or the angular velocity of the driven disk should become insufficient to wind up the film fast enough, the drive shaft 51 can be inclined relative to its normal position in the direction of rotation of the disk to automatically effect an increase in the angular velocity of the same when such increase is needed. It will be readily understood that the greatest change in the angular velocity of the wind-up shaft occurs between the time when the wind-up core is empty and when the wind-up roll assumes a reasonably large diameter, because it is during this time that the diameter of the wind-up roll varies the fastest. The "hunting" action of the driving roller in the present invention will, therefore, be most pronounced between the time the wind-up core is empty and when the wind-up roll reaches a reasonably large diameter. After the wind-up roll reaches a reasonably large diameter, the drive shaft 51 is inclined very little to

its normal position and very little "hunting" is done by the driving roller.

Although the variable speed drive constituting the present invention is adapted for driving wind-up shafts to maintain a constant tension in the web being wound, this drive is not limited to this use. It can readily be used for driving any web feeding member the angular speed of which it might be desired to vary in order to obtain a constant tension on the feed of a web moved thereby. By way of illustrating this fact we have shown in Fig. 11 the two described embodiments of our novel variable speed drive driving two web moving sprockets in a web path where constant speed and constant tension might be required at points intermediate the supply and wind-up of the web.

Referring to Fig. 11, wherein is shown a schematic lay-out of a web path including web feeding members driven by our novel variable speed drive, it is conceivable that it might be desirous to move a film from a supply roll 115, through a machine 116 which would perform some operation on the film, over a driving sprocket 117 to another machine 118 which would perform a second operation on the film, over another driving sprocket 119, and subsequently to a wind-up roll 120. The machine 116 could be any type of apparatus for performing the desired operation on the film, for example, a printer, a cleaning and burnishing machine, etc., and through which the film was required to be pulled at a constant speed and constant tension by the sprocket 117. The other machine 118 could likewise be any type of machine for performing a desired operation on the film and through which the film had to be pulled at constant speed and constant tension by the sprocket 119. The nature and purpose of the machines referred to are immaterial to an illustration of the application of our novel variable speed drive to a web feeding member other than a wind-up roll, the primary fact being that a variable speed drive for the web is required which will constantly feed a web at constant speed and constant tension over a given part of its path.

The easiest and most practical way of detecting a change in the rate of movement of a web over a given path between two points, one of which is a web feeding member, is to ascertain whether the tension in the web between said points varies from a given value incident to a given speed of movement of the web between said points. This is true, of course, only when the parts and apparatus over, and through, which the web passes offers no more resistance to the web at any time than they would under normal operating conditions. Then to correct for any change in the speed of the web, the driving means for the web feeding member should be such as to vary the angular velocity of the web-feeding member in response to any change in the web speed and tension in the proper manner to account for the variation in speed, and return the the same to a normal, or given, value. Both embodiments of our novel variable speed drive are adapted to vary the speed of a web-feeding member in response to a change in the tension of a web from a normal, or given, value, and are, therefore, particularly adapted for driving web-feeding members, such as sprockets 117 and 119, which are required to feed a film over a given portion of a path at constant speed and at a constant tension.

While in Fig. 11 we have shown each of the film-feeding sprockets driven by a different embodiment of our variable speed drive, such a showing is for the purpose of illustrating that each embodiment is adapted to such an application, and is not intended to infer that each embodiment is suited to different requirements. Referring to Fig. 11, we have shown the drive sprocket 117 driven by the embodiment of our novel drive in which the drive shaft 51 is swung from its normal position along the diameter of the driven disk 25 connected to the sprocket 117 by the alternate energization of electro-magnets 97. The circuit of each electro-magnet includes the normally open switches 99 and 99' which are adapted to be alternately closed and opened by a finger 110 on the float roller 102 located in the loop in the film path. To facilitate the schematic showing of this embodiment of the invention, the float roller 102 is shown, not supported in the film loop as set forth in describing this embodiment of the drive above, but suspended from a spring 121 which normally tends to raise the roller and, therefore, acts in the same capacity as the weight of the roller when the same is supported in the loop as previously set forth.

The sprocket 119 is shown driven by a variable speed drive constructed in accordance with the preferred embodiment of our invention above set forth. In this arrangement, the free end of the drive shaft 51 includes a roller 29 which engages a horizontal loop in the film path, the required tension in the film being imposed by the counter-weight 84 acting on the roller in opposition to a foreshortening of the loop. As long as the film is being fed at a constant speed by the sprocket 119 there will be a given tension on the film which will hold the drive shaft 51 in its normal position relative to the driven disk 25 connected to the sprocket, and in which position the driving roller 50 will be tangent to a driving circle on the driven disk so that it will not tend to "hunt." If for any reason the speed of the drive sprocket 119 becomes such that the tension of the web varies from the given value, the drive shaft will be swung from its normal position by the shortening of the loop, or the counter-weight, depending upon whether the tension increases or decreases relative to the given value, and the driving roller will "hunt" along the shaft 51 until the angular speed of the driven disk 25 is altered to remedy such a change in tension.

From the above description of different embodiments of the variable speed drive constituting our invention, along with specific applications thereof, it is believed that the advantages and versatility of the same over known variable speed drives will be readily apparent to those skilled in the art.

While we have shown and described certain specific embodiments of our invention, we are fully aware that many modifications thereof are possible. Our invention, therefore, is not to be restricted except insofar as is necessitated by the spirit of the appended claims.

Having thus described our invention, what we claim is new and desire to secure by Letters Patent of the United States is:

1. In a web feeding mechanism the combination of a web feeding member adapted to engage and move a web, a driven member connected to said feeding member to drive the same, a driving member, a variable speed transmission between said driven member and said driving member, and means for varying said transmission to alter the speed of said driven member, said last mentioned means including electro-magnetic means for directly shifting said transmission to vary the speed

of said driven member, and a member movable in response to a change in tension in the web adapted to control the energization of said electro-magnetic means to maintain a constant tension in said web being fed.

2. In a web feeding mechanism the combination of a web feeding member adapted to engage and move a web, a driven disc connected to said feeding member to drive the same, a driving member frictionally engaging the surface of said disc and mounted to move radially of said disc to vary the angular velocity of said disc, means for mounting said driving member so that it can be moved over the face of the disc to incline its axis relative to all radii of the disc, whereby the driving member is automatically moved in or out on the disc to vary the angular velocity of the disc by a component of the driving force between the two depending upon whether the axis of the driving member is inclined relative to a given radius in the direction of rotation of the disc or counter thereto, and means movable in response to a change in tension in the web adapted to control the movement of the driving member to incline the axis thereof to the radii of said disc, whereby the angular speed of the driven disc is varied to maintain a constant tension in said web being fed.

3. In a web feeding mechanism the combination of a web feeding member adapted to engage and move a web, a driven disc connected to said feeding member to drive the same, a driving member frictionally engaging the surface of said disc eccentrically of the center thereof and movable along its axis substantially radially of said disc on one side of the center thereof, said driving member mounted to move relative to said disc between a normal position, wherein its axis lies in register with a diameter of said disc, and an abnormal position, wherein its axis intersects a point on a line in register with said diameter which is eccentric to the center of the disc, and means movable in response to a change in tension in the web adapted to control the movement of said driving member between said normal and abnormal positions, whereby the speed of the web feeding member is automatically varied to maintain the tension in the web constant at all times.

4. In a web feeding mechanism the combination of a web feeding member adapted to engage and move a web, a driven disc connected to said feeding member to drive the same, a shaft mounted to move relative to said disc between a normal position, wherein it lies in register with a diameter of said disc and parallel thereto, and an abnormal position, wherein it is inclined to said diameter and intersects a point on a line in register with said diameter which is eccentric to the center of the disc, a driving member frictionally engaging the surface of said disc eccentrically of the center thereof and mounted on said shaft to one side of the center of said disc to move axially of said shaft on one side of the center of said disc and with said shaft over the surface of said disc, and means movable in response to a change in tension in the web adapted to control the movement of said shaft between said normal and abnormal positions, whereby the speed of the web feeding member is automatically varied to maintain the tension in the web constant at all times.

5. In a web feeding mechanism the combination of a web feeding member adapted to engage and move a web, a driven disc connected to said feeding member to drive the same, a shaft mounted to move relative to said disc between a normal position, wherein it lies in register with a diameter of said disc and parallel thereto, and an abnormal position, wherein it is inclined to said diameter and intersects a point on a line in register with said diameter which is eccentric to the center of the disc, a driving member frictionally engaging the surface of said disc eccentrically of the center thereof and mounted on said shaft to one side of the center of said disc to move axially of said shaft on one side of the center of said disc and with said shaft over the surface of said disc, and a movable member supported in a loop in the web being fed, and adapted to be moved in one direction by a shortening of the loop, means tending to move the member in an opposite direction to induce a given tension in the web, said movable member mechanically connected to said shaft to move the same between said normal and abnormal positions when the movable member moves due to a variation in tension in said web from the given tension.

6. In a web feeding mechanism the combination of a web feeding member adapted to engage and move a web, a driven disc connected to said feeding member to drive the same, a shaft mounted to move relative to said disc between a normal position, wherein it lies in register with a diameter of said disc and parallel thereto, and an abnormal position, wherein it is inclined to said diameter and intersects a point on a line in register with said diameter which is eccentric to the center of the disc, a driving member frictionally engaging the surface of said disc eccentrically of the center thereof and mounted on said shaft to one side of the center of said disc to move axially of said shaft on one side of the center of said disc and with said shaft over the surface of said disc, means normally holding said shaft in its normal position, electrically operated means adapted to move said shaft from its normal position to an abnormal position, when the tension in the web varies from a given value, a switch for controlling the circuit of said electrically operated means, a movable member supported by a loop in the web being fed and adapted to move when the tension in the web varies from a given value, the movement of said movable member controlling the opening and closing of said switch.

7. In a web feeding mechanism the combination of a web feeding member adapted to engage and move a web, a driven disc connected to said feeding member to drive the same, a shaft mounted to move relative to said disc between a normal position, wherein it lies in register with a diameter of said disc and parallel thereto, and an abnormal position, wherein it is inclined to said diameter and intersects a point on a line in register with said diameter which is eccentric to the center of the disc, a driving member frictionally engaging the surface of said disc eccentrically of the center thereof and mounted on said shaft to one side of the center of said disc to move axially of said shaft on one side of the center of said disc and with said shaft over the surface of said disc, means normally holding said shaft in its normal position, electro-magnetic means adapted when energized to move said shaft from its normal position, a normally open switch in the circuit of said electro-magnetic means, and a movable member supported by a loop in the web being fed and adapted to be moved when the tension in the web varies from a given value, the movement of said movable member adapted

to close said switch and keep it closed until the tension in the web returns to said given value.

8. In a web feeding mechanism the combination of a web feeding member adapted to engage and move a web, a driven disc connected to said feeding member to drive the same, a shaft pivoted at a point on a line in register with a diameter which is eccentric to the center of said disc to swing between a normal position, wherein it lies in register with said diameter and parallel thereto, and an abnormal position, wherein it is not in register with said diameter, means for rotating said shaft, a driving member frictionally engaging the surface of said disc eccentrically of the center thereof, said driving member keyed to said shaft on one side of the center of the disc and adapted to move axially of said shaft on one side of the center of said disc, and with said shaft, over the surface of said disc, and means movable in response to a change in tension in the web adapted to control the movement of said shaft between said normal and abnormal positions, whereby the speed of the web feeding member is automatically varied to maintain the tension in the web constant at all times.

9. In a web feeding mechanism the combination of a web feeding member adapted to engage and move a web, a driven disc connected to said feeding member to drive the same, a shaft pivoted at a point on a line in register with a diameter which is eccentric to the center of said disc to swing between a normal position, wherein it lies in register with said diameter and parallel thereto, and an abnormal postion, wherein it is not in register with said diameter, means for rotating said shaft, a driving member frictionally engaging the surface of said disc eccentrically of the center thereof, said driving member keyed to said shaft on one side of the center of the disc and adapted to move axially of said shaft on one side of the center of said disc, and with said shaft, over the surface of said disc, a weighted movable member supported in a loop in the web being fed and adapted to be moved when the tension in the web varies from a given value, said movable member connected to the free end of said shaft to pivot the same between said normal and abnormal positions when the movable member moves due to a variation in tension in said web from the given value.

10. In a web feeding mechanism the combination of a web feeding member adapted to engage and move a web, a driven disc connected to said feeding member to drive the same, a shaft pivoted at a point on a line in register with a diameter which is eccentric to the center of said disc to swing between a normal position, wherein it lies in register with said diameter and parallel thereto, and an abnormal position, wherein it is not in register with sad diameter, means for rotating said shaft, a driving member frictionally engaging the surface of said disc eccentrically of the center thereof, said driving member keyed to said shaft on one side of the center of the disc and adapted to move axially of said shaft on one side of the center of said disc, and with said shaft, over the surface of said disc, a roller directly connected to the free end of the shaft and engaging a loop in the web being fed, which loop extends substantially perpendicular to the shaft when the same is in its normal position, a counter-weight normally acting on the free end of the shaft in a direction opposite to that of the loop of the web adapted to oppose the tension in the web and hold the same in its normal position when the tension in the web is at a given value.

11. In a web feeding mechanism the combination of a web feeding member adapted to engage and move a web, a driven disc connected to said feeding member to drive the same, a shaft pivoted to a point on a line in register with a diameter which is eccentric to the center of said disc to swing between a normal position, wherein it lies in register with said diameter and parallel thereto, and an abnormal position, wherein it is not in register with said diameter, means for rotating said shaft, a driving member frictionally engaging the surface of said disc eccentrically of the center thereof, said driving member keyed to said shaft on one side of the center of the disc and adapted to move axially of said shaft on one side of the center of said disc, and with said shaft, over the surface of said disc, an armature on the shaft and spaced from the pivot point of said shaft, electro-magnetic means to one side of said shaft adapted to attract said armature, an electric circuit for said electro-magnetic means including a normally open switch, a movable member supported by a loop in said web and adapted to be moved by a change in tension in said web from a given value, said movable member arranged to engage and close said switch when the tension in the web varies from the given value, and to maintain said switch closed until the tension in said web returns to the given value.

12. In a web feeding mechanism the combination of a web feeding member adapted to engage and move a web, a driven disc connected to said feeding member to drive the same, a shaft pivoted at a point on a line in register with a diameter which is eccentric to the center of said disc to swing between a normal position, wherein it lies in register with said diameter and parallel thereto, and an abnormal position, wherein it is not in register with said diameter, means for rotating said shaft, a driving member frictionally engaging the surface of said disc eccentrically of the center thereof, said driving member keyed to said shaft on one side of the center of the disc and adapted to move axially of said shaft on one side of the center of said disc, and with said shaft, over the surface of said disc, means normally acting on said shaft to maintain the same in its normal position, a pair of armatures on said shaft and diametrically opposed in the direction of movement of said shaft, a pair of electro-magnetic means mounted adjacent said shaft, each juxtaposed to one of said armatures, an electric circuit for each of said electro-magnetic means and including a normally open switch, a movable member supported by a loop in said web and adapted to move with a change in tension in said web from a given value, said movable member arranged to engage and close one of said switches when the tension in the web increases above the given value, whereby one of the electro-magnetic means is energized to draw the shaft in one direction from its normal position, and adapted to engage and close the other of said switches when the tension in the web falls below the given value, whereby the other electro-magnetic means is energized to draw the shaft in the other direction from its normal position.

13. In a web feeding mechanism the combination of a web feeding member adapted to engage and move a web, a driven disc connected to said feeding member to drive the same, a shaft mounted to move relative to said disc between a nor-

mal position, wherein it lies in register with a diameter of said disc and parallel thereto, and an abnormal position, wherein it is inclined to said diameter and intersects a point on a line in register with said diameter which is eccentric to the center of the disc, a driving roller frictionally engaging the surface of said disc eccentrically of the center thereof and mounted on said shaft to one side of the center of said disc to move axially of said shaft on one side of the center of said disc and with said shaft over the surface of said disc, to and from said abnormal position in which the axis of the driving roller is inclined relative to all radii of the disc, whereby the driving roller is automatically moved in or out on the disc to vary the angular velocity of the disc by a component of the driving force between the two depending upon whether the axis of the driving roller is inclined relative to a given radius in the direction of rotation of the disc or counter thereto, means movable in response to a change in tension in the web adapted to control the movement of said shaft between its normal and abnormal positions, whereby the angular speed of the driven disc is varied to maintain a constant tension in said web being fed, and means for restraining the movement of said driving roller along said shaft in one direction to prevent "hunting" incident to a normal tendency of the transmission to overdrive.

14. In a web feeding mechanism the combination of a web feeding member adapted to engage and move a web, a driven disc connected to said feeding member to drive the same, a shaft mounted to move relative to said disc between a normal position, wherein it lies in register with a diameter of said disc and parallel thereto, and an abnormal position, wherein it is inclined to said diameter and intersects a point on a line in register with said diameter which is eccentric to the center of the disc, a driving roller frictionally engaging the surface of said disc eccentrically of the center thereof and mounted on said shaft to one side of the center of said disc to move axially of said shaft on one side of the center of said disc and with said shaft over the surface of said disc, to and from said abnormal position in which the axis of the driving roller is inclined relative to all radii of the disc, whereby the driving roller is automatically moved in or out on the disc to vary the angular velocity of the disc by a component of the driving force between the two depending upon whether the axis of the driving roller is inclined relative to a given radius in the direction of rotation of the disc or counter thereto, means movable in response to a change in tension in the web adapted to control the movement of said shaft between its normal and abnormal positions, whereby the angular speed of the driven disc is varied to maintain a constant tension in said web being fed, and means for restraining the movement of said driving roller along said shaft in one direction to prevent "hunting" incident to a normal tendency of the transmission to overdrive, said restraining means constituting a part of the means for mounting the driving roller on said shaft.

15. In a web feeding mechanism the combination of a web feeding member adapted to engage and move a web, a driven disc connected to said feeding member to drive the same, a shaft mounted to move relative to said disc between a normal position, wherein it lies in register with a diameter of said disc and parallel thereto, and an abnormal position, wherein it is inclined to said diameter and intersects a point on a line in register with said diameter which is eccentric to the center of the disc, a driving roller frictionally engaging the surface of said disc eccentrically of the center thereof and mounted on said shaft to one side of the center of said disc to move axially of said shaft on one side of the center of said disc and with said shaft over the surface of said disc, to and from said abnormal position in which the axis of the driving roller is inclined relative to all radii of the disc, whereby the driving roller is automatically moved in or out on the disc to vary the angular velocity of the disc by a component of the driving force between the two depending upon whether the axis of the driving roller is inclined relative to a given radius in the direction of rotation of the disc or counter thereto, means movable in response to a change in tension in the web adapted to control the movement of said shaft between its normal and abnormal positions, whereby the angular speed of the driven disc is varied to maintain a constant tension in said web being fed, and means for restraining the movement of said driving roller along said shaft in one direction to prevent "hunting" incident to a normal tendency of the transmission to overdrive, said restraining means including a wheel carried by said driving roller and arranged to roll along the periphery of said shaft as the roller moves therealong, and a one-way clutch acting on said wheel to permit its rotation in one direction but not in the other.

CLIFTON M. TUTTLE.
WILLIAM BORNEMANN.