H. H. STEELE.

TYPE WRITING MACHINE.

APPLICATION FILED DEC. 11, 1908.

990,307. Patented Apr. 25, 1911.

2 SHEETS—SHEET 1.

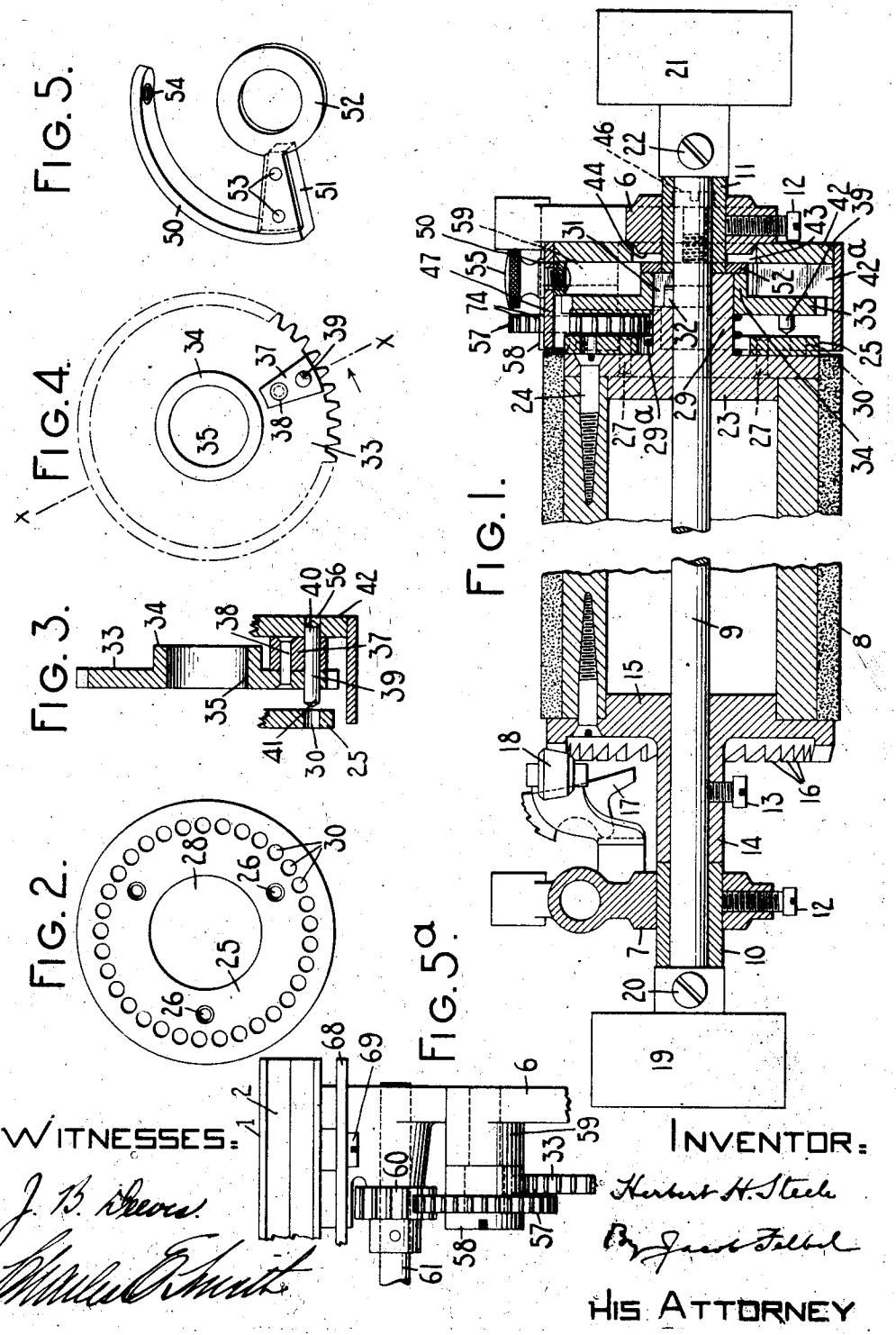

WITNESSES:

J. B. Deeves

Charles E. Smith

INVENTOR:

Herbert H. Steele

By Jacob Felbel

HIS ATTORNEY

H. H. STEELE.

TYPE WRITING MACHINE.

APPLICATION FILED DEC. 11, 1908.

990,307. Patented Apr. 25, 1911.

2 SHEETS—SHEET 2.

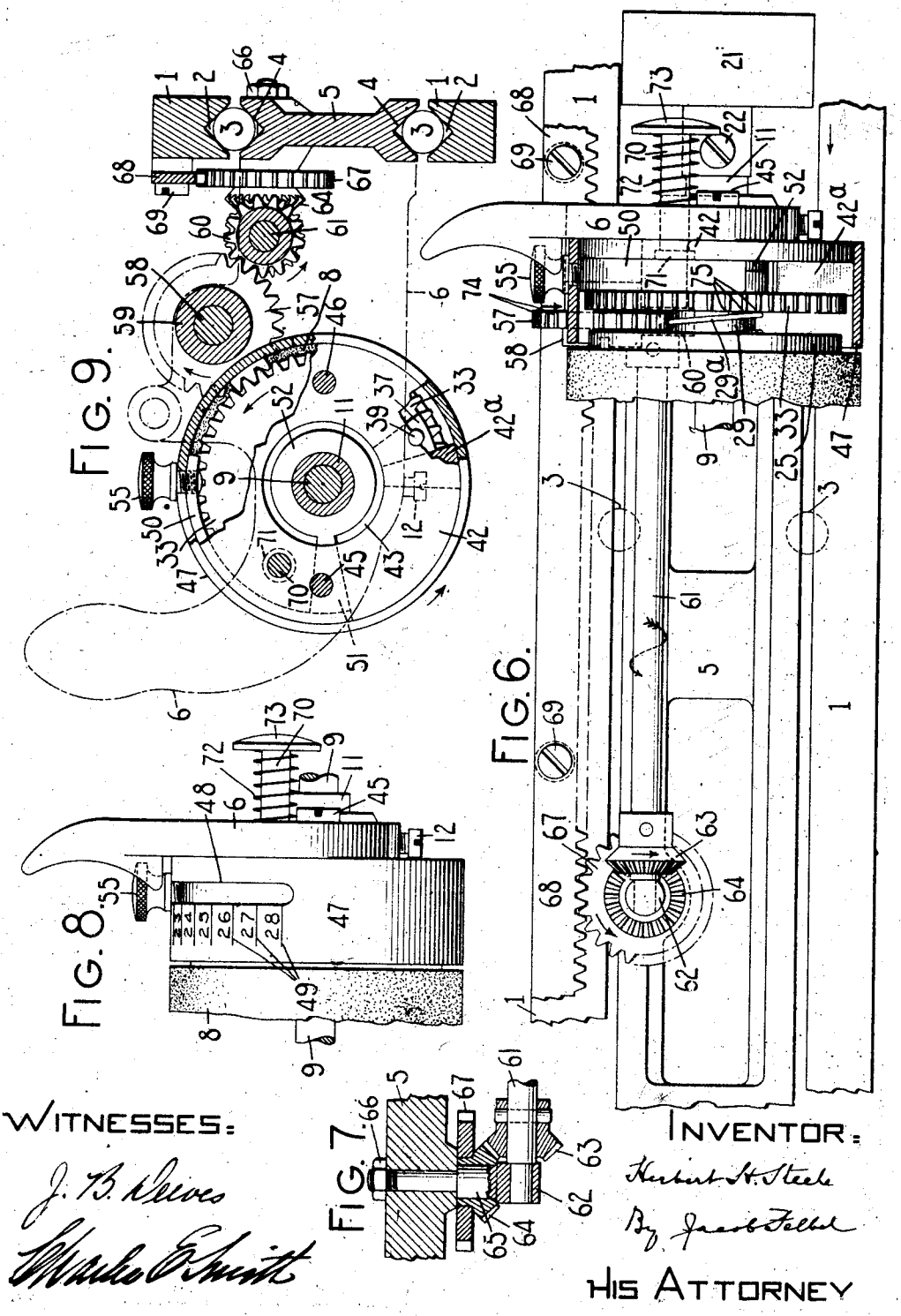

WITNESSES:

J. B. Deeves

Charles E. Smith

INVENTOR:

Herbert H. Steele

By Jacob Felbel

HIS ATTORNEY

UNITED STATES PATENT OFFICE.

HERBERT H. STEELE, OF MARCELLUS, NEW YORK, ASSIGNOR TO THE MONARCH TYPE WRITER COMPANY, OF SYRACUSE, NEW YORK, A CORPORATION OF NEW YORK.

TYPE-WRITING MACHINE.

990,307. Specification of Letters Patent. Patented Apr. 25, 1911.

Application filed December 11, 1908. Serial No. 467,055.

To all whom it may concern:

Be it known that I, HERBERT H. STEELE, citizen of the United States, and resident of Marcellus, in the county of Onondaga and State of New York, have invented certain new and useful Improvements in Type-Writing Machines, of which the following is a specification.

My invention relates to typewriting machines and to billing mechanism more particularly adapted for "condensed record" billing.

One of the objects of my invention is to provide comparatively simple and efficient billing mechanism and by the use of which the mind of the operator is entirely relieved of the strain incident in the use of some constructions, to the necessity of remembering predetermined indices or watching the movement of an indicator.

A further object of my invention is to provide billing mechanism wherein the movement of the carriage is rendered effective to rotate the platen.

To the above and other ends which will hereinafter appear, my invention consists in the features of construction, arrangements of parts and combinations of devices to be hereinafter described and claimed.

In the accompanying drawings, in which like reference characters designate corresponding parts in the various views, Figure 1 is an enlarged vertical sectional view taken centrally through the axis of the platen. Fig. 2 is an enlarged detail outer face view of one of the parts of the billing mechanism to be hereinafter described. Fig. 3 is an enlarged transverse sectional view corresponding to a section taken on the line *x*—*x* of Fig. 4 and showing the stop-carrying gear and some of the associated parts. Fig. 4 is an enlarged detail outer face view of the stop-carrying gear. Fig. 5 is an enlarged detail perspective view of the adjustable stop and its carrier. Fig. 5ª is a fragmentary plan view showing a portion of the gearing and some of the associated parts. Fig. 6 is an enlarged fragmentary front elevation, with parts in section, of the billing mechanism and some of the associated parts. Fig. 7 is an enlarged horizontal sectional view showing a portion of the gear between the frame of the machine and the platen. Fig. 8 is an enlarged fragmentary front elevation showing the right-hand end of the platen and some of the associated parts. Fig. 9 is an enlarged vertical fore and aft sectional view, with parts broken away, of the billing mechanism and some of the associated parts as seen from the direction of the arrow in Fig. 6.

I have shown my invention in the present instance embodied in a Monarch typewriting machine, but have only shown so much of said machine as may be necessary to an understanding of my invention. It should be understood, however, that the invention may be embodied in various styles of typewriting machines.

Fixed guide rails 1 are secured to the top plate of the machine in the usual manner and are grooved on opposite faces thereof as indicated at 2 to provide race-ways for co-operating anti-friction balls or rollers 3. These rollers are received in opposite grooved faces 4 in a transverse bar 5 which, with the forwardly projecting end bars 6 and 7, constitute the platen frame or carriage that is supported on the anti-friction balls or rollers for transverse movement across the top plate of the machine in the usual manner, it being understood that the usual step-by-step letter spacing or carriage feed mechanism (not shown) is employed to control the carriage in its feed movement across the top plate.

A rotative cylindrical platen 8 is mounted upon a platen shaft 9 which extends through and is journaled in bearing sleeves 10 and 11 received in openings in the end bars 7 and 6 respectively of the carriage and secured therein by set screws 12. The platen is connected at the left-hand end portion thereof to the platen shaft by a set screw 13 that passes through a threaded opening in a sleeve or hub 14 formed on the left-hand platen head 15. The inner end of the screw 13 bears against the platen shaft and thus connects the platen to the shaft. The platen head 15 is formed with line spacing ratchet teeth 16 with which the usual line spacing pawl 17 coöperates. A spring-pressed roller detent 18 bears against the teeth of the line spacing wheel to prevent an accidental overthrow of the platen and to properly position the platen at each line spacing move-

ment. The left-hand end of the platen shaft 9 has the usual finger wheel 19 secured thereto by a screw 20, the hub of the line spacing wheel abutting the outer end of the bearing sleeve 10 to prevent a longitudinal movement of the platen and shaft in one direction. The opposite end of the platen shaft is provided with a finger wheel 21 secured in the usual manner to the platen shaft by a screw 22. The right-hand platen head 23 is secured to the core of the platen by wood screws 24 in the usual manner and the outer right-hand face of the platen head is flush with the rubber sheath of the platen as shown in Fig. 1.

A disk 25, shown in detail in Fig. 2, is provided with openings 26 which are adapted to register with corresponding openings in the right-hand platen head 23. Rivets 27 unite the disk 25 and the platen head 23. The disk 25 has a central opening 28 therein through which a hub 29 on the right-hand platen head extends, the opening 28 being of greater diameter than the hub to provide an annular chamber or recess in which one end of an expansion spring 29^a is received. A series of circularly arranged openings 30 is provided in the disk 25, the number of the openings corresponding to the number of line spacing ratchet teeth 16 provided on the line spacing wheel. The hub 29 of the right-hand platen head has a cut-out 31 for the reception of a locking pin or feather 32 secured to the platen shaft and extending laterally therefrom so as to connect the platen shaft and right-hand platen head to turn together, but permitting the shaft to be withdrawn from the head. A stop-carrying gear or wheel 33 has a laterally projecting hub 34 on one side thereof. The central opening 35 in the stop-carrying wheel is of a diameter that corresponds essentially to the diameter of the hub 29 of the right-hand platen head on which the stop-carrying gear is adapted to slide and to rotate freely, as will hereinafter more clearly appear. The coiled expansion spring 29^a surrounds the hub 29 and bears at one end against the inner face of the stop-carrying wheel 33 and at its opposite end against the outer face of the right-hand platen head, the spring being received in the opening or annular recess formed between the hub 29 and the disk 25. The gear 33 has a stop 37 which projects laterally from the outer face thereof and which is riveted to the gear as indicated at 38 in Figs. 3 and 4. A locking pin 39 is driven and secured by a drive fit in alined openings in the stop and gear, and projects at one end 40 to the right of the stop 37 and at the other end 41 to the left of the left-hand face of the gear 33 for purposes which will hereinafter appear.

A disk 42 is provided with a central opening 43 to receive the boss or enlargement 44 on the right-hand end bar 6 of the platen frame or carriage so that the body of the disk 42 may bear against the inner face of said end bar, to which it is secured by screws 45 and 46. These screws pass freely through openings in the right-hand end bar and are received at their threaded ends in tapped openings in the disk 42. The disk 42 carries an inwardly projecting stop 42^a secured thereto in any suitable manner. The disk 42 has a cylindrical housing 47 secured thereto, the housing extending inwardly from the disk and surrounding the stop-carrying gear 33 and the associated parts. The housing 47 has a slot 48 extending around it for a considerable distance, as indicated in Fig. 8, and indices 49 form a line space indicating scale along one edge of the slot.

From an inspection of Fig. 5 it will be seen that a segmental stop carrier 50 is provided with a stop 51 and a supporting ring 52 is secured to the stop by rivets 53. The segmental carrier has a tapped opening 54 in one end thereof. The supporting ring or sleeve 52 surrounds the bearing sleeve 11 at the inner end thereof as shown in Fig. 1 and the segmental carrier 50 fits within the cylindrical housing at the slotted portion thereof. A thumb screw 55 extends through the slot 48 in the cylindrical housing and takes at its threaded end in the tapped opening 54 in the stop carrier, a shoulder on the thumb screw binding against the outer face of the cylindrical housing to secure the stop 51 and its carrier in any position to which they may be adjusted around the axis of the platen. The disk 42 is provided with a single opening 56 therein for coöperation with the end 40 of the locking pin when the parts are in the normal positions indicated in Fig. 3. A sliding movement of the stop-carrying gear 33 toward the platen will, however, displace the end 40 of the pin from the opening 56 and thus disconnect or unclutch the stop-carrying gear from the fixed housing and from the carriage to which it is normally connected against movement by said pin. The cylindrical portion 47 of the housing is apertured to receive a gear 57 mounted on a shouldered pivot screw 58 received at its threaded end in a tapped opening in an inwardly extending boss 59 on the right-hand bar 6 of the carriage. The gear 57 meshes with a pinion 60 secured to the right-hand end of a shaft 61 mounted to turn at one end in a bearing opening formed in the right-hand end bar of the carriage and at its opposite end in a bearing 62. The left-hand end of the shaft 61 is provided with a beveled pinion 63 which meshes with a like pinion 64 that turns on a shouldered screw bolt or spindle 65 (Fig. 7). This spindle passes through an opening in the traverse bar 5 and is secured in place by a nut 66. The

bearing 62 hereinbefore referred to is formed at the forward end of the shouldered spindle 65. The beveled pinion 64 has a gear 67 secured thereto in any suitable manner, preferably by securing the gear to the hub of the beveled pinion by a drive fit. The gear 67 meshes with a fixed rack 68 secured by screws 69 to the upper fixed guide rail 1 so that the rack 68 is secured to a fixed part of the machine whereas the gear 67 and the parts driven thereby are carried by the carriage, and a relative movement between the carriage and rack 68 effects a turning movement of the gear 67 and the parts controlled thereby.

The stop-carrying gear wheel 33 is normally maintained in the positions shown in Figs. 1 and 6 with the pin 39 seated in the hole 56 in the fixed disk 42, and in this position said gear is out of mesh with the gear 57. At this time the travel of the carriage is effective to turn the gears 67, 64, 63, the shaft 61 and the gears 60 and 57; but no movement is transmitted by the gear 57 to the gear 33 and the parts controlled thereby. However I have provided hand-controlled means operable at will for throwing the gear 33 into mesh with the gear 57 in order that the stop-carrying gear 33 and the parts controlled thereby may be rotated by the movement of the carriage.

From an inspection of Fig. 6 it will be seen that a spindle 70 projects through alined bearing openings in the right-hand end bar 6 of the carriage and through the disk 42 and is provided with an enlargement or head 71 at the inner end thereof to prevent the withdrawal of the spindle through its bearing openings in the disk and right-hand end bar. This head 71 is received in a countersunk opening in the disk 42 when the parts are in the normal position, as shown in Fig. 6. An expansion spring 72 surrounds the spindle 70 and bears at one end against a head or finger piece 73 on the spindle and at its other end against the outer side of the end bar 6 of the carriage. The head 71 when pushed inwardly by a longitudinal movement of the spindle 70 is adapted to bear against the outer face of the gear 33 in order to slide it inwardly along the hub 29 against the tension of its spring 29^a. This movement of the gear is effective to move the left-hand end 41 of the locking pin 39 into engagement with one of the openings 30 in the disk 25 which is secured to the platen head, thus connecting the gear 33 with the platen. The same movement is effective to move the locking pin 40 out of engagement with the disk 42 of the housing so that the gear 33 is released from engagement with the carriage and is thrown into engagement with the platen. The same movement of the gear 33 is also effective to bring it into mesh with the gear 57. The outer corners of the teeth on the gear 57 are beveled as indicated at 74 as are the inner ends or corners of the teeth on the gear wheel 33, as indicated at 75, in order that the teeth of the gears may be prevented from jamming against each other when the gear 33 is moved in the direction of the axis of the platen. As soon as any movement of the carriage takes place, the gear 33 is turned and the pin 40 is moved out of register with its opening 56 and the operator may then release the finger piece 73 and the effective engagement between the gears 33 and 57 will be maintained during the backward and forward rotations of the platen until such time as the gear 33 again arrives at its initial position where the locking pin 40 registers with the opening 56. The pressure of the spring 29^a then becomes effective to slide the gear 33 outwardly in the direction of the axis of the platen to automatically effect a disconnection between the gears 33 and 57, at the same time disconnecting the gear 33 from the platen.

The sizes of the stops 42^a, 37 and 51 are such that the stop 37 in its rotative movement is adapted to coact with the relatively fixed stops 42^a and 51, notwithstanding the shifting of the gear 33 in the direction of the axis of the platen to render the gear 33 operative. It will be understood that the stop 42^a is a fixed stop which always remains in the same position, whereas the stop 51 is adjustable in a circular path around the axis of the platen and is secured in its adjusted position by the thumb screw 55. These two stops extend into the path of movement of the stop 37 around the axis of the platen and arrest the platen in its backward and forward rotations.

In order to set the stop 51 in the first instance, it is merely necessary to introduce the record, invoice and interposed carbon sheet into the machine with the leading edges thereof together or with the proper lead given to the invoice sheet. In turning the platen from the point where sheets are first introduced into the machine to bring the first writing line on the invoice sheet to the printing line, the operator should note the number of teeth of the line spacing wheel which click past the spring detent in effecting such movement. This may be assumed to be twenty-six, for example. The thumb screw 55 is then loosened and the stop carrier 50 moved by the thumb screw until the latter registers with the index "26," and the thumb screw is then tightened to secure the adjustable stop 51 in the position to which it has been set. The operator may then proceed to write the invoice, a copy thereof being duplicated on the record sheet through the interposed carbon. When the invoice has been completed the operator will effect a two or three line space movement of

the platen, by the usual line spacing mechanism, in order to provide a proper spacing between the last written item reproduced on the record sheet and the first line of the next record to be reproduced thereon, thus providing proper spacing between successive copies on the record sheet. The operator may then remove the invoice sheet without disturbing the carbon and record sheets. The writing of the last item on the invoice sheet left the carriage near the left-hand end of its travel and it should be allowed to remain in this position and pressure is exerted on the finger piece 73 to move the gear 33 into mesh with its companion gear 57. The operator may then move the carriage to the right, thus effecting a rotation of the gear 33 through the intermediate train of gearing between said gear 33 and the fixed rack 68, the various parts at this time moving in the directions of the arrows in Figs. 6 and 9. This is effective to turn the platen backwardly until the stop 37 travels from the position shown in Fig. 9 adjacent to the fixed stop 42^a, until it is arrested by the adjustable stop 51. As soon as the platen starts to rotate the operator may remove pressure on the finger piece 73 and the locking pin 40 bearing against the inner face of the disk 42 will maintain the gear 33 in proper engagement with the disk 25 fixed to the right-hand platen head and will maintain the gears 33 and 57 in mesh. The rearward or backward rotation of the platen thus produced is effective to turn the platen the requisite distance to receive a new invoice sheet which may now be introduced into the machine. The carriage may now be moved from right to left to effect a forward rotation of the platen, thus causing the stop 37, which is still connected with the platen, to move out of contact with the adjustable stop 51 and the platen may continue its forward rotation until the stop 37 reaches the fixed stop 42^a when the platen will be arrested. The forward movement of the platen thus produced is effective to move the newly introduced invoice sheet to a position where the first writing line space thereon is properly positioned at the printing line. When this position is reached the locking pin 40 is brought into register with its opening 56 and the pressure of the spring 29^a is effective to restore the gear 33 to normal position where the locking pin 40 is received in its opening 56 and a disengagement between the gears 33 and 57 is automatically effected and a further movement of the carriage at this time is ineffective to produce a rotation of the platen. The carriage may then be moved to the proper letter space position to begin writing the first line and the operator may proceed with the writing of the invoice sheet in the ordinary manner, the writing being reproduced through the interposed carbon on the record sheet. The operation may thus be continued indefinitely until the record sheet is filled when new record, carbon and invoice sheets may be introduced into the machines as before.

While I have shown in the present instance a construction wherein the stop 51 may be adjusted from, say, the twenty-third to the twenty-eighth line space position, which is ordinarily sufficient for the average condensed record work, affording as it does nearly a complete rotation of the platen, nevertheless the parts may be constructed and arranged to afford a greater variation or range of adjustment of the stop 51 if desired and various changes may be made without departing from my invention.

From the foregoing description it will be understood that the stops 37, 42^a and 51 constitute means for determining the extent of backward and forward rotations of the platen, although from the broad aspects of my invention any determining means may be employed. It will also be seen that each of the gears of the train between the rack 68 and the gear 57 receives a rotation in one direction when the carriage is moved in one direction and receives a reverse rotation when the carriage is moved in the opposite direction, and that the finger piece 73 is operable at will to operatively connect the platen with the gear 57 and thus render the movement of the carriage effective to rotate the platen either forwardly or backwardly depending on the direction of movement of the carriage.

What I claim as new and desire to secure by Letters Patent, is:—

1. In a typewriting machine and billing mechanism, the combination of a carriage, a rotative platen carried thereby, means for determining the extent of backward and forward rotation of the platen, and means controlled by the movement of the carriage for rotating the platen, said means being operatively connected to the means for determining the extent of forward and backward rotation of the platen.

2. In a typewriting machine and billing mechanism, the combination of a carriage, a rotative platen carried thereby, stop devices for arresting the rotation of the platen, and means controlled by the movement of the carriage for rotating the platen, said means being also operatively connected to said stop devices.

3. In a typewriting machine and billing mechanism, the combination of a carriage, a rotative platen carried thereby, relatively adjustable stop devices for arresting the forward and backward rotation of the platen and means controlled by the movement of the carriage for rotating the platen, said

means being also connected to said relatively adjustable stop devices.

4. In a typewriting machine and billing mechanism, the combination of a carriage, a rotative platen carried thereby, stop devices for arresting the forward and backward rotation of the platen, and means controlled by the movement of the carriage for rotating the platen, said means being operatively connected to said stop devices; the movement of the carriage in one direction rotating the platen in one direction and the movement of the carriage in the opposite direction rotating the platen in the other direction.

5. In a typewriting machine and billing mechanism, the combination of a carriage, a rotative platen carried thereby, means for determining the extent of rotation of the platen, and geared connections between the platen and the frame of the machine for effecting a rotation of the platen by a movement of the carriage, said gear connections being also operatively connected to the means for determining the extent of rotation of the platen.

6. In a typewriting machine and billing mechanism, the combination of a carriage, a rotative platen carried thereby, means for determining the extent of rotation of the platen, geared connections between the platen and the frame of the machine for effecting a rotation of the platen by a movement of the carriage, said gear connections being operatively connected to said means for determining the extent of rotation of the platen, and means for rendering said geared connections operative or inoperative to effect a rotation of the platen.

7. In a typewriting machine and billing mechanism, the combination of a carriage, a rotative platen carried thereby, means for determining the extent of rotation of the platen, geared connections between the platen and the frame of the machine for effecting a rotation of the platen by a movement of the carriage, said gear connections being operatively connected to said means for determining the extent of rotation of the platen, and means for effecting a connection or disconnection between certain of said geared connections.

8. In a typewriting machine and billing mechanism, the combination of a carriage, a rotative platen carried thereby, means for determining the extent of rotation of the platen, a gear operatively connected to said means, means for rotating said gear by the travel of the carriage, and means operable at will for operatively connecting the platen with said gear to be rotated thereby.

9. In a typewriting machine and billing mechanism, the combination of a carriage, a rotative platen carried thereby, means for determining the extent of rotation of the platen, a gear operatively connected to said means, means for rotating said gear in one direction by the movement of the carriage in one direction and for rotating the gear in the opposite direction by the movement of the carriage in the opposite direction, and means for effecting an operative connection and disconnection between said gear and the platen.

10. In a typewriting machine and billing mechanism, the combination of a carriage, a rotative platen carried thereby, means for determining the extent of rotation of the platen, a fixed rack, a gear on the carriage which is driven by the relative movement between said gear and rack, and means for effecting an operative connection and disconnection between said gear and platen.

11. In a typewriting machine and billing mechanism, the combination of a carriage, a rotative platen, stops for arresting the platen, a gear operatively connected to said stops, means for rotating said gear by the travel of the carriage, and means operable at will for operatively connecting the platen with said gear to be rotated thereby.

12. In a typewriting machine and billing mechanism, the combination of a carriage, a rotative platen carried thereby, relatively adjustable stops for arresting the platen in its forward and backward rotation, a gear operatively connected to said stops, means for rotating said gear by the travel of the carriage, and hand actuated means operable at will for operatively connecting the platen with said gear to be rotated thereby.

13. In a typewriting machine and billing mechanism, the combination of a carriage, a rotative platen carried thereby, relatively adjustable stops for arresting the platen in its forward and backward rotation, a gear operatively connected to said stops, means for rotating said gear in one direction by the movement of the carriage in one direction and for rotating the gear in the opposite direction by the movement of the carriage in the opposite direction, and means for effecting an operative connection and disconnection between said gear and the platen.

14. In a typewriting machine and billing mechanism, the combination of a carriage, a rotative platen carried thereby, a fixed rack, a train of gearing between said fixed rack and the platen, hand controlled means for shifting one of said gears into and out of mesh with another of the gears of the train, and stop devices for arresting the platen.

15. In a typewriting machine and billing mechanism, the combination of a carriage, a rotative platen carried thereby, a fixed rack, a train of gearing between said fixed rack and the platen, hand controlled means for shifting one of said gears into and out of mesh with another of the gears of the train, means for maintaining the shifted gear in

mesh during the back and forth rotations of the platen, and stop devices for arresting the platen.

16. In a typewriting machine and billing mechanism, the combination of a carriage, a rotative platen carried thereby, means for determining the extent of rotation of the platen, geared connections between the platen and the frame of the machine for effecting a rotation of the platen by a movement of the carriage, means for rendering said geared connections operative or inoperative to effect a rotation of the platen, and means for maintaining the connections operative during the back and forth rotations of the platen.

17. In a typewriting machine and billing mechanism, the combination of a carriage, a rotative platen carried thereby, means for determining the extent of rotation of the platen, geared connections between the platen and the frame of the machine for effecting a rotation of the platen by a movement of the carriage, means for rendering said geared connections operative or inoperative to effect a rotation of the platen, and means for maintaining the connections operative during the back and forth rotations of the platen and for automatically rendering the connections inoperative when the said rotations have been completed.

18. In a typewriting machine and billing mechanism, the combination of a carriage, a rotative platen carried thereby, means for determining the extent of rotation of the platen, a gear, means for rotating said gear in one direction by the movement of the carriage in one direction and for rotating the gear in the opposite direction by the movement of the carriage in the opposite direction, means for effecting an operative connection and disconnection between said gear and the platen, and means for maintaining the connection between said gear and platen during the backward and forward rotations of the platen.

19. In a typewriting machine and billing mechanism, the combination of a carriage, a rotative platen carried thereby, means for determining the extent of rotation of the platen, a gear, means for rotating said gear in one direction by the movement of the carriage in one direction and for rotating the gear in the opposite direction by the movement of the carriage in the opposite direction, means for effecting an operative connection and disconnection between said gear and platen, and means for maintaing such operative connection during the backward and forward rotations of the platen and for automatically effecting a disconnection when the backward and forward rotations have been completed.

20. In a typewriting machine and billing mechanism, the combination of a carriage, a rotative platen carried thereby, a gear normally clutched to the carriage, a second gear, means for turning said second gear by a movement of the carriage, hand operated means for shifting said first mentioned gear out of clutching engagement with the carriage and for shifting it into mesh with said second gear and for operatively connecting said first mentioned gear with the platen, and stops for arresting the platen.

21. In a typewriting machine and billing mechanism, the combination of a carriage, a rotative platen carried thereby, a gear normally clutched to the carriage, a second gear, means for turning said second gear by a movement of the carriage, hand operated means for shifting said first mentioned gear out of clutching engagement with the carriage and for shifting it into mesh with said second gear and for operatively connecting said first mentioned gear with the platen, and relatively adjustable stops for arresting the platen in its forward and backward rotations, one at least of said stops being connected with said first mentioned gear.

22. In a typewriting machine and in billing mechanism, the combination of a rotative platen, a rotative stop carrier mounted co-axially with the platen and shiftable axially and normally disconnected from the platen, means for shifting said stop carrier axially, a clutch for connecting said stop carrier with the platen when shifted axially, means for turning said platen and stop carrier together, and relatively adjustable fixed stops coöperating with the stopping means on the stop carrier to arrest the forward and backward rotative movements of the platen variably, according to the relative adjustment of said relatively adjustable stops.

23. In a typewriting machine and billing mechanism, the combination of a rotative platen, a stop carrier mounted co-axially with said platen and shiftable axially and normally disconnected from the platen, means for shifting said stop carrier axially, means for clutch[illegible]g said stop carrier to said platen when so shifted, means for turning said stop carrier, said stop carrier being normally disconnected from said tur[illegible]ng means but connected therewith when shifted, and fixed stopping means coöperating with the stop carrier.

24. In a typewriting machine and billing mechanism, the combination of a rotative platen, a gear wheel mounted co-axially with the platen and shiftable axially and normally disconnected from the platen, stopping means mounted on said gear wheel, means for couplir[illegible] said gear wheel to said platen when the gear wheel is shifted, a cooperating gear normally out of mesh with said shiftable gear but in position to mesh with said shiftable gear when the latter is

shifted, and stopping means coöperating with the stopping means on said shiftable gear.

25. In a typewriting machine and in billing mechanism, the combination of a rotative platen, a stop carrier mounted co-axially with the platen and shiftable axially and normally disconnected from the platen, a relatively fixed part, means for connecting said stop carrier with said relatively fixed part when the stop carrier is in normal position, means for connecting the stop carrier to the platen when the stop carrier is shifted, and relatively adjustable stops coöperating with the stopping means on the stop carrier to arrest the forward and backward rotative movements of the platen variably, according to the relative adjustment of said relatively adjustable stops, the relative adjustment of the stops being concentric with the platen and of an extent which varies from a few line spaces to substantially a complete rotation of the platen so that a newly introduced bill sheet may be conveyed from the point of insertion to the printing line with the aid of said stops.

26. In a typewriting machine and billing mechanism, the combination of a carriage, a rotative platen carried thereby, means for determining the extent of rotation of the platen, means controlled by the movement of the carriage for rotating the platen, said means being operatively connected to the said means for determining the extent of rotation of the platen, and hand actuated means operable at will for simultaneously rendering said determining means and said platen rotating means effective.

27. In a typewriting machine and billing mechanism, the combination of a carriage, a rotative platen carried thereby, means for determining the extent of rotation of the platen, geared connections between the platen and the frame of the machine for effecting a rotation of the platen by a movement of the carriage, said geared connections being operatively connected to the means for determining the rotation of the platen, and hand actuated means operable at will for simultaneously throwing said geared connections into mesh and for rendering the said determining means operative.

28. In a typewriting machine and billing mechanism, the combination of a carriage, a rotative platen carried thereby, stops for determining the extent of rotation of the platen, means controlled by the movement of the carriage for rotating the platen, said means being operatively connected to said stops, and hand actuated means operable at will for simultaneously throwing said stops into operation and for rendering the platen rotating means operative.

Signed at Syracuse, in the county of Onondaga and State of New York, this 9th day of December, A. D. 1908.

HERBERT H. STEELE.

Witnesses:
BESSIE G. KITTELL,
MARIE K. UNDERDOWN.