May 28, 1935. C. FIELD 2,002,770

WIRE TESTING MACHINE AND METH(

Original Filed June 18, 19

Fig. 1.

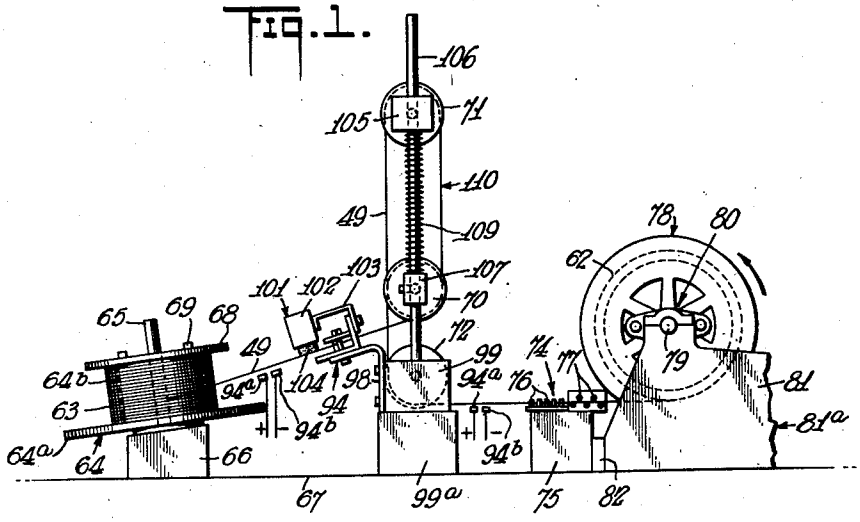

Fig. 3.

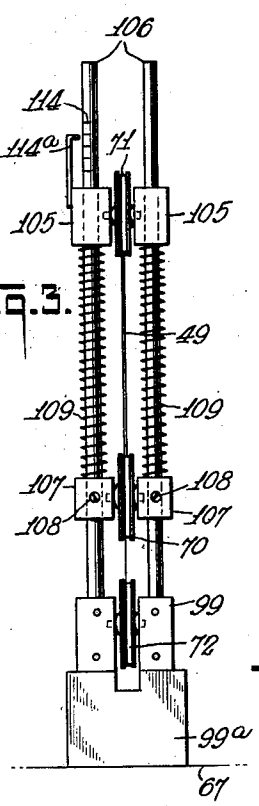

Fig. 4.

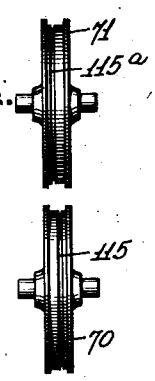

Fig. 5.

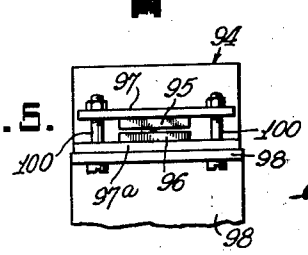

Fig. 2.

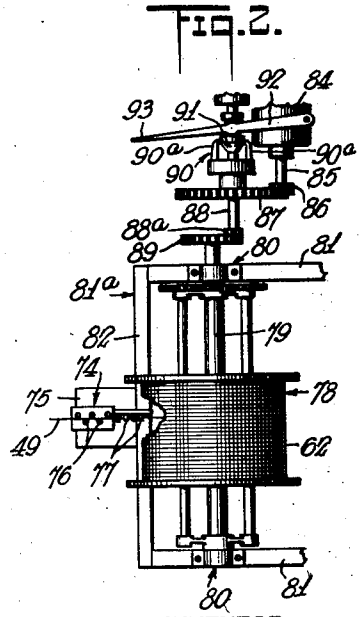

INVENTOR
Crosby Field
BY
George C. Dean
his ATTORNEY

Patented May 28, 1935 2,002,770

UNITED STATES PATENT OFFICE

2,002,770

WIRE TESTING MACHINE AND METHOD

Crosby Field, Brooklyn, N. Y., assignor to Brillo Manufacturing Company, Inc., a corporation of New York

Original application June 18, 1927, Serial No. 199,692. Divided and this application August 3, 1928, Serial No. 297,320. In Canada June 11, 1928

14 Claims. (Cl. 265—18)

My present invention is set forth in my co-pending application Ser. No. 199,692, filed June 18, 1927, issued November 8, 1932, as Patent No. 1,886,661, of which this case is a division. That application relates to a complete plant for producing metal wool and many of its important features are in the nature of improvements which may be used with or in place of related apparatus and parts disclosed in my Patents Nos. 1,608,478 and 1,608,481, dated November 23, 1926. In this plant, wire is drawn from a suitable source and is conducted through a series of successively arranged cutting or shaving units which operate upon the wire to produce the metal wool. Features of said prior Patent 1,608,481 and of said parent application which are of significance in connection with my present invention, are that the wire is conducted through the machine in a succession of curves and loops by single-direction bending without reversely curving it, the direction of bending being the same as the curvature in the wire as it unwinds from the supply reel and is wound on the traction reel; also that small diameter guide rolls are employed between relatively large diameter rotary cutter beds, so that the rolls increase the bend or set of the wire between its successive loops around the large diameter cutter beds; and in said parent application said small diameter rolls include pairs of spring tensioned rolls around which the wire is looped. In the preferred case, the wire from the last of these units is too thin to withstand the strain of shaving and is conducted to a reel on which it is wound in a coil to be disposed of as waste.

Each time the supply of wire becomes exhausted, it is necessary to stop the machine to supply a fresh coil. The coils obtainable in the market are of limited length, weighing approximately three hundred pounds and to stop the machine for every three hundred pounds of wire fed through it is expensive since the several attendants of the machine are idle while a fresh coil of wire is being adjusted to the machine.

Consequently, I have provided wire winding mechanism which includes a reel upon which a number of coils of the usual weight may be wound, the end of the wire of one coil being welded to the end of the wire of the next succeeding coil, thus producing a single coil which may weigh, say, four thousand pounds and may be thousands of feet in length, conveniently permissible lengths, even with heavy wire, being between one and two miles.

I have found by practical experience that the wire in passing through the machine may become ruptured, even though the machine is perfectly normal in adjustment and operation, and I finally discovered by microscopic examination that this is usually due to externally invisible bad spots caused by slag or imperfections in the wire. Whenever a rupture occurs, it is of course necessary to stop the machine, bring together and weld the broken ends, take up slack and restart the machine.

By my present invention, the above cause of delay and expense in the operation of the machine, is minimized and can be entirely avoided, but it will be evident that while originally intended for this specific purpose, my present invention as well as various features thereof, are capable of use for many other purposes.

For such purposes, I employ means for testing and breaking any bad spots in the wire before it passes to the reel, the means shown including a friction device which is adjustable so as to produce an excess tension on the wire, such as is found by experience, the uncut wire should withstand in order to ensure against rupture in the machine, after the wire has been weakened by shaving. Thus, when the testing strain comes on a bad portion of the wire and it breaks, the defective portion can be cut out and the good ends rewelded in the testing machine. The wire tension required will vary with the kind and size of material that is to be wound. The reeling machine is more fully described and claimed in another divisional application, Ser No. 297,316, filed August 3, 1928, issued Oct. 13, 1931 as Patent 1,826,758.

The testing breaker machine is provided with means to indicate the actual tension applied on the wire and the variation thereof by adjustment of the friction device. In order to indicate the applied tension, that portion of wire between the friction device and the winding reel is conducted in a loop around a plurality of rollers, one of said rollers being supported for bodily movement, towards and away from the other one, against the action of a spring, the bodily movement of said roller being indicated on a scale by a suitable pointer. I have discovered that where a predetermined tension stress is applied to the wire, the breaking stress will be greatest at points where the wire is most sharply bent around the small-diameter, set-imparting rolls. Consequently, in my present machine the wire is looped around the testing rolls by single-direction bending, the direction of the bending being the same as the direction of bend of the wire on the wind-

up reel. Moreover, as will be obvious from the drawing, the testing rolls around which the wire is looped between the friction drag and the wind-up reel are of relatively small diameter, and correspondingly sharp curvature, as compared with the diameter and curvature of the wind-up reel. In this way the wire is tested under curvature substantially the same as the most trying curvature to which it is to be subjected in use; and if some of the set thus imparted to the wire is taken out prior to or during winding on the traction drum, the advantage of having had it flexed and tested before use, is obvious. Moreover, experience seems to show that the stretching of the metal on the convex side of the curve has a distinctly beneficial molecular effect on this part of the metal which is the first to be cut by the knives when the wind-up reel is subsequently used as the supply reel for the wool cutting machine.

The wire is conducted to the winding reel through a stationary straightener and for level winding it is necessary to have the winding reel feed back and forth axially of its shaft at a rate dependent on the length of the wire. The preferred mechanism for this purpose is set forth and claimed in my companion application, Ser. No. 297,316, filed August 3, 1928, but any suitable level winding reel may be used.

The above and other features of my invention will be more evident from the following description in connection with the accompanying drawing, in which,

Fig. 1 is a front elevation of the wire testing and winding mechanism;

Fig. 2 is a top plan view of the righthand portion of Fig. 1;

Fig. 3 is a view of the tension indicating means of the wire tester as seen from the lefthand end in Fig. 1;

Fig. 4 is an end view illustrating the pulleys or rollers of the tension indicating means around which the wire is looped; and

Fig. 5 is a detail end view of the friction device associated with the wire tester.

As shown in Figs. 1 and 2, a large coil of wire, **62** (Fig. 1), may be produced from smaller coils **63** successively placed on a drum reel **64**, having a base flange **64***a* and a core **64***b* mounted to rotate about a shaft **65** extending upwardly from a support or block **66** on the floor **67**. A detachable flange **68** may be secured to the core **64***b* by screws or bolts **69**, to enable the coil **63** to be placed on the reel. The wire **49** is conducted from the reel **64** around rollers **70**, **71** and **72**, hereinafter described, through a wire straightener **74**, supported on a stationary block **75**; said straightener having vertically disposed rollers **76** and horizontally disposed rollers **77** between **81***a*, said walls being connected to each other by cross-bar **82**. The reel **78** is rotated in an anticlockwise direction in Fig. 1 to thus draw the wire **49** from the coil **63** and wind it up.

To drive the shaft **79** and thus rotate the reel **78** in order to wind up the wire, **49**, there may be provided an electric motor **84** (Fig. 2), having a shaft **85** with a pinion **86** to drive a gear **87**, which gear may rotate freely on a suitably supported shaft **88**; said shaft having a pinion **88***a* to drive a gear **89** secured to shaft **79**. The gear **87** may be connected with the shaft **88** at will through the medium of a clutch **90**, including levers **90***a* which may be separated by a cone **91** slidable on the shaft **88** to operate the clutch; said cone being operable by a lever **92** having a handle **93**. By swinging the lever **92** upwardly in Fig. 2, the cone is withdrawn from between the clutch levers **90***a*, thus disconnecting the gear **87** from the shaft **88** and thus stopping the rotation of the winding reel **78**.

When the end of a coil **63** of wire is reached, the rotation of the winding reel **78** is stopped by a manipulation of the clutch controlling lever **92**. The flange **68** of the reel **64** is then removed and a fresh coil placed on the core **63**. The end of wire from the fresh coil may then be welded to the end of the wire of the preceding reel by any suitable welding device, as **94***a*, **94***b*, after which the clutch controlling lever **92** is operated to connect the winding reel **78** with the motor.

For testing and breaking weak spots in the wire, so that they may be eliminated before the wire goes to the shaving machine, I provide a friction drag **94**, against the pull of the reel **78**. The drag includes two blocks **95** and **96**, held by the bars **97** and **97***a*, supported on a fixed bracket **98** secured to bearing blocks **99** in which the roller **72** is supported, the blocks **99** being supported on a foundation **99***a* on the floor **67**. The blocks **95** and **96** clamp the wire and the clamping effect may be adjusted by bolts **100** which are effective to draw the bar **97** towards the bracket **98** in order to increase the pressure of the blocks **95** and **96** on the wire. The tension is adjusted so that any part of the wire that is defective enough to break in the shaving machine will be broken in the tester. The defective part is then cut out and the good ends are welded. The tension required for this purpose, is amply sufficient for tight winding of the wire on the reel **78**.

To prevent undue wear of the clamping blocks **95** and **96** by the wire and scoring of the wire by the blocks, as well as to ensure smooth uniform operation, there may be provided a lubricating device **101**, which may include a cup **102** supported on a fixed bracket **103**. Extending from the lower part of the cup **102** is a felt pad

roller 71, and then downwardly to form a loop 110. The wire extends around the fixed axis roller 72 to the reel 78, as previously described. Some and preferably all of these rolls around which the wire is bent are of small diameter and sharp curvature as compared with the minimum diameter and curvature of the wind-up reel; and the bends of the wire around said rolls are all of them in the same direction; and preferably this direction is the same as the direction of curvature of the wire when wound up on the traction reel.

The length of loop 110 varies according to the adjustment of the friction device 94. When the pressure of the friction device 94 is increased, which may be accomplished by manipulating the nuts of the bolts 100, the tension of loop 110 is increased, thus pulling the roller 71 downwardly against increasing opposition of the springs 109.

The bodily movement of the roller 71 is utilized to indicate the tension on the wire, a pointer 114a being secured on one of the blocks 105, and a graduated scale 114 on one of the rods 106. To prevent touching or rubbing where the wire 49 crosses below the roller 70 (Fig. 1), the wire is guided in a groove 115 (Fig. 4) which is offset in a plane to one side of a similar groove 115a, formed in the upper roller 71, from which upper roller the wire extends downwardly to another grooved roller 72. Thus the wire slants slightly from the roller 70 to the roller 71 and extends vertically downward from the roller 71 to clear that stretch of the wire extending from the supply reel 64 to the roller 70.

I claim:

1. A wire testing device, including traction means to feed the wire, means frictionally engaging the wire to resist the feed thereof, the pressure of said means being predetermined with relation to a tensioning means comprised of a stationary guide roller, a floating guide roller, the wire being conducted around both rollers to form a complete loop, the bends of which are all in the same direction, resilient means associated with the floating roller to resist a change in length of the loop, and means associated with the floating roller of said tensioning means to indicate the tension of the wire.

2. A wire testing device, including an end roller, a second end roller, an intermediate roller, the wire extending from its source around the intermediate roller, then around the first end roller and then around the second end roller, wire traction means to which the wire is conducted from the second end roller, the intermediate roller and the second end roller being stationary, means to floatingly support the first end roller, a spring against the action of which the first roller may move bodily in accordance with the tension of the wire, all bends of the wire around said rollers being in the same direction.

3. In a wire testing and winding machine the combination including means for supplying wire, traction means for winding the wire under tension and serially included between the supply and traction means, a means for lubricating the wire, means for applying a friction drag upon the wire; a yieldable means for variably deflecting the wire from the straight path between the supply and traction means according to the amount of tension on the wire, designed and arranged to afford space for an electric welding means between the friction drag means and the traction means for joining the ends of the wire when the wire is broken through cooperation between the friction drag and yieldable means with the traction means.

4. A wire testing machine, including means for supplying wire, traction means for winding the wire under tension and, serially included between the supply and traction means, means for lubricating the wire; means for applying a friction drag upon the wire; and yieldable means for variably deflecting the wire from the straight path between supply and traction means according to the amount of the tension on the wire, the deflecting of the wire being by bends which are all in the same direction.

5. A wire testing machine, including means for supplying wire, traction means for winding the wire under tension and, serially included between the supply and traction means, means for lubricating the wire, means for applying a friction drag upon the wire, and means between the traction winding means and the drag for bending the tensioned wire in one direction only, without reverse curving thereof.

6. In a wire testing and winding machine the combination including means for supplying wire, traction means for winding the wire under tension and serially included between the supply and traction means, means for tensioning the wire and predetermining the tension with reference to a yieldable means for variably deflecting the wire from the straight path between the supply and traction means according to the amount of the tension on the wire; designed and arranged to afford space for an electric welder for joining the ends of the wire when it is broken through cooperation of the tensioning means and variably deflecting means with the traction means.

7. In a wire testing and winding machine the combination including means for supplying wire, traction means for winding the wire under tension and serially included between the supply and traction means, means for applying a friction drag upon the wire and predetermining the amount of friction with reference to a yieldable means for variably deflecting the wire from the straight path between supply and traction means according to the amount of the tension on the wire; designed and arranged to afford space for an electric welder for joining the ends of the wire when it is broken through cooperation of the tensioning means and variably deflecting means with the traction means.

8. In a wire testing device, means for applying tension to the wire comprising traction means including a wind-up reel, a supply reel, means for putting a predetermined drag upon the wire, and means intermediate the drag and traction means for curving the wire in one direction only without reversely bending it, said direction of curvature being the same as when wound on the traction reel.

9. In a wire testing device, means for applying tension to the wire comprising traction means, a supply reel, means for putting a predetermined drag upon the wire, and means intermediate the drag and traction means for bending the tensioned wire in one direction only and in a curve at least as sharp as that to which it is to be subjected when in use.

10. A wire testing device, including a traction reel on which the wire is wound, means for supplying the wire and subjecting it to a predetermined high resistance to the traction of the traction reel and means for deflecting the tensioned part of the wire by successive curves in the same direction, without reverse bending, and including

a curve sharper than the curvature of the wire when wound upon the traction reel.

11. A wire testing device, including traction means for the wire, a supply reel from which the wire is drawn, means for supplying the wire under a predetermined high resistance to the traction of the traction means, and means for bending the tensioned part of the wire including equal-diameter rolls around which said tensioned wire passes in a parallel sided loop the successive curves of which are in the same direction.

12. A method of preparing great lengths of wire to be reduced to metal wool and metal scrap in a continuous machine, which method includes electrically welding end to end, a multiplicity of commercial bundle coils of spring metal wire, winding the wire by end traction and tensioning it by resistance applied between the supply and traction points and yieldably deflecting the tensioned wire from the straight path between said points, the tensioning resistance being predetermined with reference to the variations of the yieldable deflection due to varying tension and in accordance with but safely above the known average breaking tension of the sound wire when reduced to scrap thickness in the metal wool cutting machine, and electrically re-welding the wire if and when broken by the tension.

13. A method of preparing great lengths of wire to be reduced to metal wool and metal scrap in a continuous machine, which method includes electrically welding end to end, a multiplicity of commercial bundle coils of spring metal wire, winding the wire by end traction and tensioning it by resistance applied between the supply and traction points, the tensioning resistance being predetermined in accordance with but safely above the known average breaking tension of the sound wire when reduced to scrap thickness in the metal wool cutting machine; and electrically re-welding the wire if and when broken by the tension.

14. The method specified by claim 13 with the further feature that while tensioned, wire is deflected in curves of less radius than the convolutions in which it is wound under the end tension.

CROSBY FIELD.