E. L. RASMUSSEN.

SASH LOCK.

APPLICATION FILED OCT. 21, 1913.

1,105,100. Patented July 28, 1914.

Fig. 1

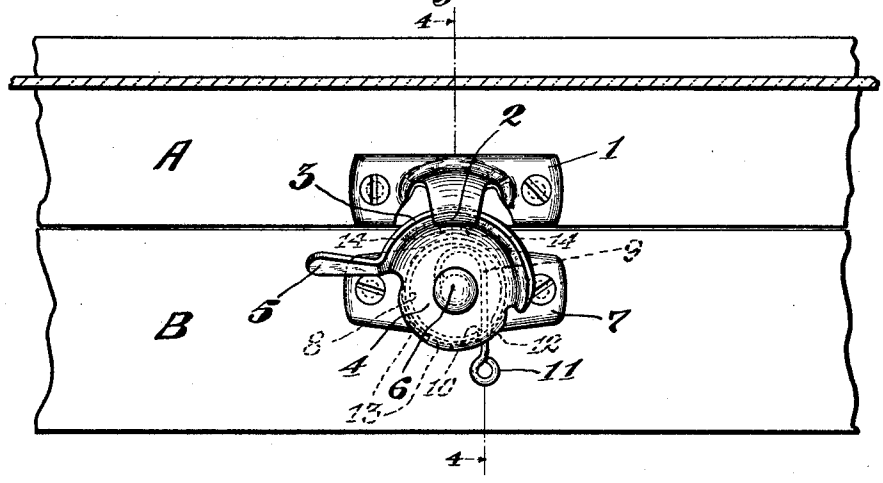

Fig. 2

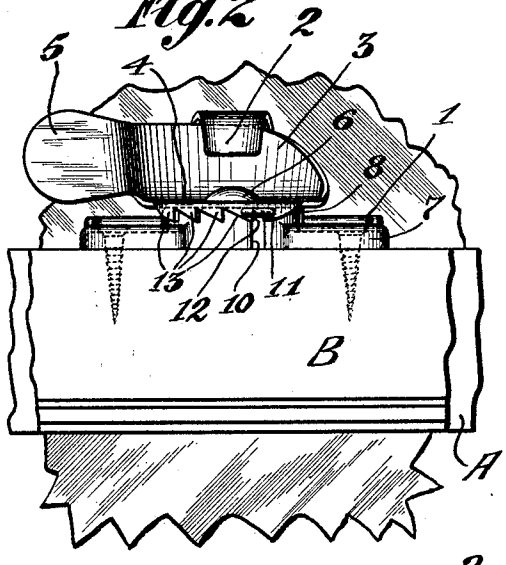

Fig. 3

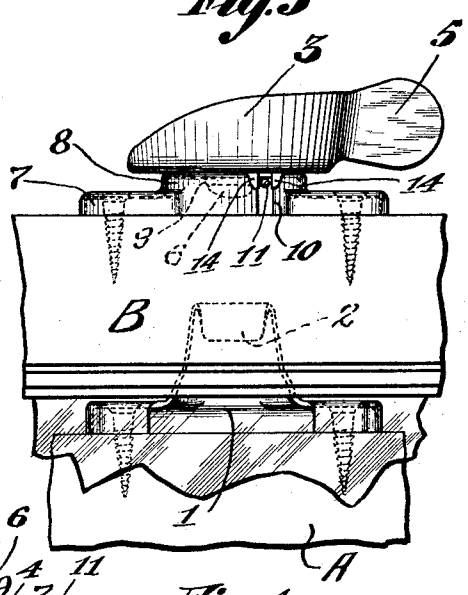

Fig. 4

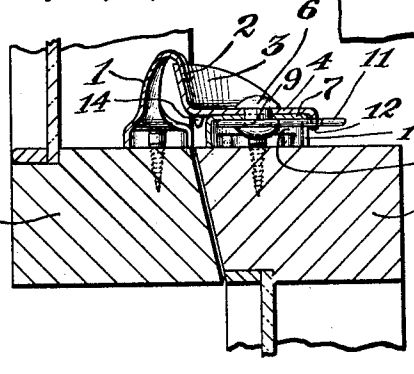

Witnesses

James E. Sproll.

Clara A. Hamm.

Inventor

Edward L. Rasmussen.

By Adams & Brooks

Attorneys.

THE NORRIS PETERS CO., PHOTO-LITHO., WASHINGTON, D. C.

UNITED STATES PATENT OFFICE.

EDWARD L. RASMUSSEN, OF SEATTLE, WASHINGTON.

SASH-LOCK.

1,105,100. Specification of Letters Patent. Patented July 28, 1914.

Application filed October 21, 1913. Serial No. 796,470.

To all whom it may concern:

Be it known that I, EDWARD L. RASMUSSEN, a citizen of the United States of America, and a resident of the city of Seattle, in the county of King and State of Washington, have invented certain new and useful Improvements in Sash-Locks, of which the following is a specification.

My invention has for its primary aim to provide a lock of the above character which will more effectually lock relatively movable elements and be simple in design and of durable construction.

A further object resides in the provision of means for positively retaining the locking elements in inoperative relation when once set or moved to such a position.

Other objects will appear as my description progresses and those features of construction and arrangements of parts on which I desire protection succinctly defined in the annexed claims.

For a full understanding of the invention reference is to be had to the following specification and the accompanying drawing in which like reference characters denote like parts throughout:

Figure 1 is a top plan of my improved lock in an operative position. Fig. 2 is a front elevation thereof. Fig. 3 is a similar view in which the locking member is inoperative and the fragmentary portions of the sashes moved from a closed position, and Fig. 4 is a section on line 4—4 of Fig. 1, disclosing more lucidly the arrangement of the component parts of the invention.

Relatively movable parts A and B, to which my lock is applied, are conveniently illustrated as the upper and lower sashes of the window. On the lower rail of the upper sash A is mounted the keeper 1 of my improved lock, the same having a downwardly terminating bill 2 which is engaged by the cam flange 3 eccentrically arranged on one side of the disk body 4. The cam flange extends outwardly and upwardly from body 4 whereby the action thereof on the bill 2 tends to close the space between the adjacent rails of the sashes, shown clearly in Fig. 4. The larger end of the cam flange terminates in an off-standing finger grip 5 whereby the flange may be moved to engage or disengage the keeper through rotating the body 4 on its pivot pin 6. This pin constitutes a means for mounting the locking member to the base plate 7 which latter is suitably fastened to the upper rail of the lower sash.

A hollow boss 8 on plate 7 provides a housing for a J-shaped spring latch 9 which is conveniently carried by pin 6 and protrudes through slot 10 of the base plate, the outer terminal 11 being formed to serve as a finger piece. A depending flange on the body opposite the cam flange is provided with a positive latch-engaging notch 12 and a series of latch-engaging notches 13 having one edge beveled to permit of the latch 9 having progressive movement toward the notch 12. It is obvious that the notches 13 will positively lock the latch from reverse movement so that should the relation of the cam flange and keeper be such that movement of the body 4 to bring the latch 9 in notch 12 is not convenient, the notches 13 will serve to prevent unlocking movement of said body. On the opposite side of body 4 are struck from said body, or otherwise provided, spaced projections 14 to form a positive latch-engaging seat for receiving the latch 9, when the locking member is inoperative, to prevent unauthorized movement of the latter, for obvious reasons. In this connection it will be noted that the sides of slot 10 serve as a reinforcement to the spring latch. The latch is easily removed from a notch by pressing down on finger piece 11, whereby the body 4 is given free manipulative force.

Having thus described my invention, what I claim as new, and desire to secure by Letters Patent of the United States of America, is:—

1. In a lock of the character described, a keeper, a locking member mounted for movement toward and from the keeper and provided with a plurality of notches certain of which are adapted to permit of movement of the member in one direction and others to retain the aforesaid member from movement in that direction permitted by the first named notches, and means adapted for engaging in the notches of said member to hold the member in a predetermined position.

2. In a lock of the character described, a keeper, a base plate having a slot therein, a locking member mounted on the plate for

rotary movement for engaging the keeper and having a series of notches on the edge thereof, and means projecting through the slot of the plate for engaging in the notches of the locking member to retain the latter from movement.

Signed at Seattle, Washington this 9th day of October 1913.

EDWARD L. RASMUSSEN.

Witnesses:

JAMES E. SPROLL,

H. E. SPENCE.

Copies of this patent may be obtained for five cents each, by addressing the "Commissioner of Patents, Washington, D. C."