Aug. 18, 1959 R. LOPEZ 2,899,881

COMBINATION CAMERA AND RADIO

Filed Aug. 21, 1957 2 Sheets-Sheet 1

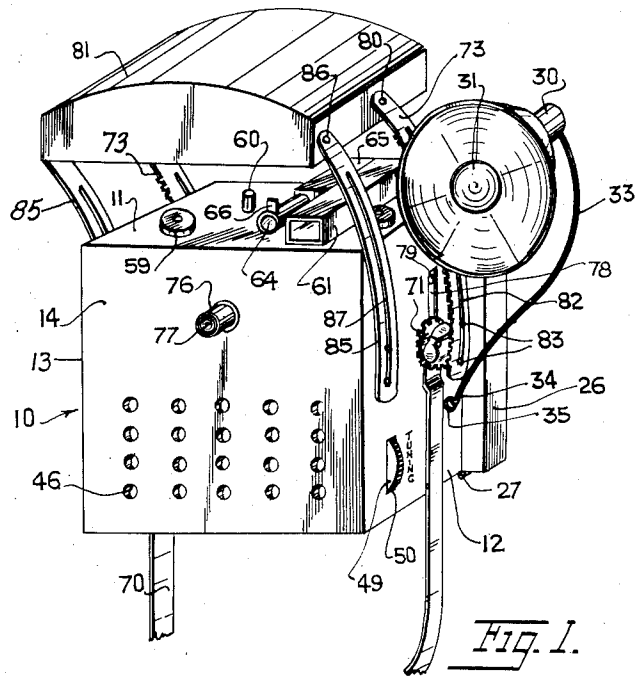

Fig. 1.

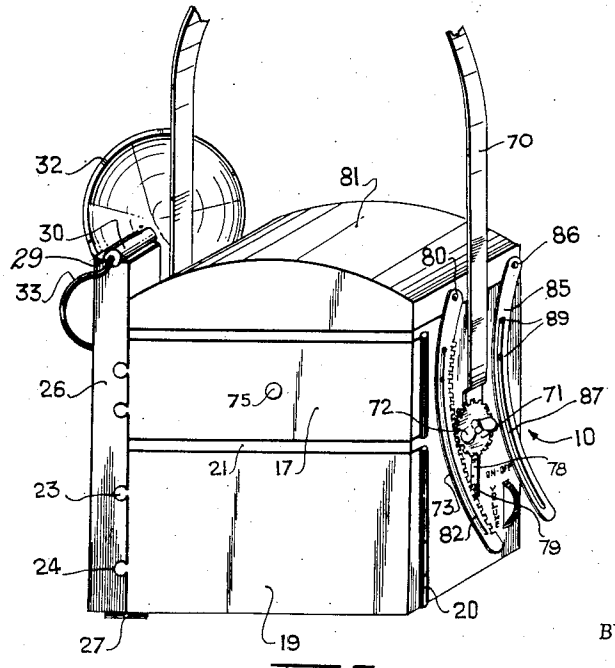

Fig. 2.

INVENTOR.
RENE LOPEZ
BY
ATTORNEY

Aug. 18, 1959 R. LOPEZ 2,899,881

COMBINATION CAMERA AND RADIO

Filed Aug. 21, 1957 2 Sheets-Sheet 2

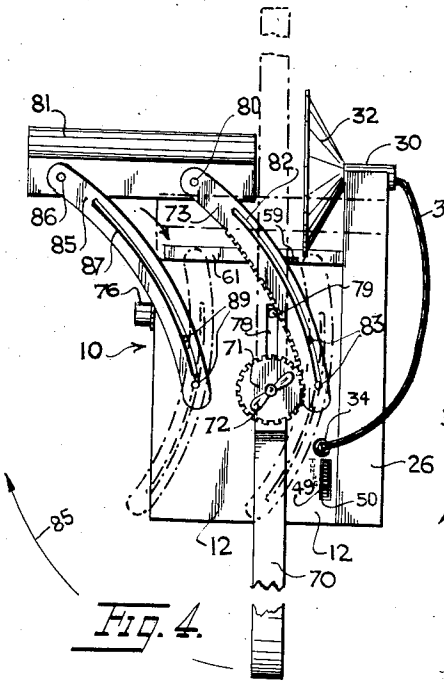

Fig. 4.

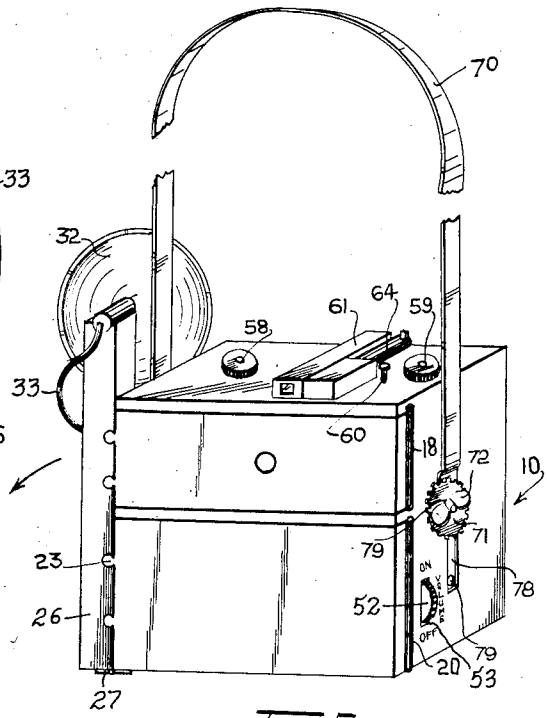

Fig. 5.

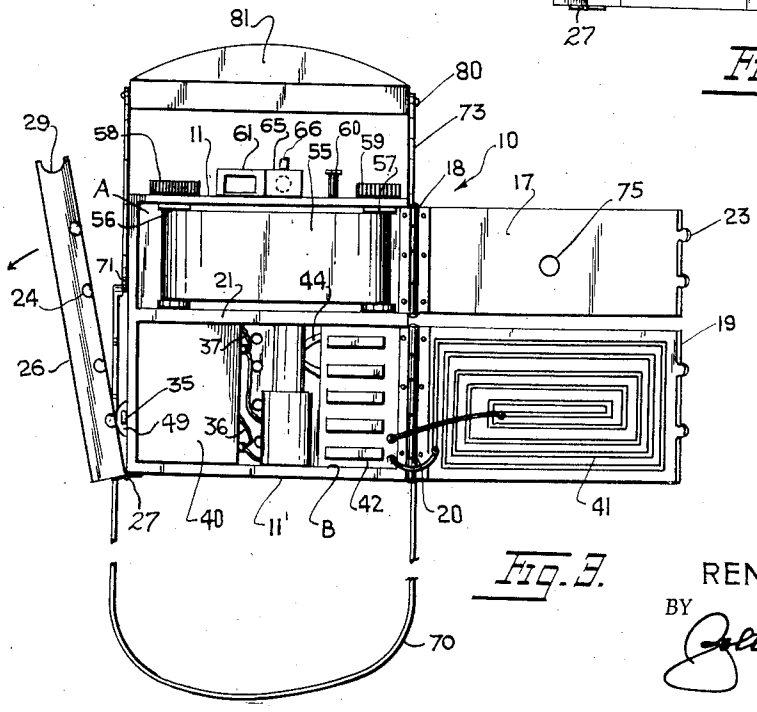

Fig. 3.

INVENTOR.
RENE LOPEZ
BY
ATTORNEY

United States Patent Office 2,899,881 Patented Aug. 18, 1959

2,899,881

COMBINATION CAMERA AND RADIO

Rene Lopez, New York, N.Y.

Application August 21, 1957, Serial No. 679,390

3 Claims. (Cl. 95—12)

This invention concerns a combined radio and camera case.

It is a principal object to provide in one compact structure a casing adapted to contain the essential parts of a camera and radio of portable types.

The invention is particularly directed at providing a casing adapted to include a miniature type of camera and a miniature radio of the transistor type.

According to the invention there is provided a casing having two compartments with hinge-mounted doors. A post is provided for removably supporting a flash bulb holder and reflector. The post is pivotally supported on the case and serves to hold the compartment doors closed. The case also includes a telescopic sight and view finder. One of the compartments contains the camera components and the other compartment contains the radio components. A retractible hood actuatable by a pivotable handle is provided to serve as a lens shade in one position and to cover and protect the telescopic sight, view finder, and camera controls when the hood is closed.

For further comprehension of the invention, and of the objects and advantages thereof, reference will be had to the following description and accompanying drawings, and to the appended claims in which the various novel features of the invention are more particularly set forth.

In the accompanying drawings forming a material part of this disclosure:

Fig. 1 is a perspective view showing the front and one side of a case embodying the invention, the hood being shown in open position.

Fig. 2 is another perspective view showing the rear and other side of the case, the hood being shown in closed position.

Fig. 3 is a rear view of the case showing compartment doors open with flash bulb holder and reflector removed.

Fig. 4 is a side view of the case.

Fig. 5 is a similar view to Fig. 2 without the arcuate links and hood, showing the exposed portions of the camera.

Referring to the drawings there is shown a hollow cubical casing **10** having a rectangular top **11**, sides **12** and **13**, front wall **14** and an open rectangular rear. The rear opening is closed by an upper door **17** pivoted on hinge **18** and a lower door **19** pivoted on hinge **20**. The casing is divided into upper and lower compartments A and B by a horizontal dividing wall **21** disposed parallel to the top **11** and bottom **11'**.

Each of the doors has laterally extending projections **23**. These projections engage in recesses **24** located in the side of post **26**. This post is pivotally supported near the rear edge of side **12** by a hinge **27** secured to the bottom of the casing. The projections are rather bulbous in shape and the mating recesses have constricted openings so that when the doors are closed the projections extend beyond side **12** and snap into the recesses **24** when the post is pivoted to abut the side **12**. Thus, the post holds the doors closed and the projections

keep the post in a vertical position. At the top of the post is a recess **29** extending arcuately more than 180° so that the cylindrical receptacle **30** which holds flash bulb **31** can be snapped into the recess. A parabolic reflector **32** is attached to receptacle **30**. Electric cable **33** extends from the receptacle and terminates in a plug **34** which is removably disposed in a socket **35** mounted in side **12**. Connected to socket **35** are wires **36** and **37** which extend from battery **40** disposed in the lower compartment B. Wires **38** also extend from the battery terminals to energize the radio contained in compartment B.

Mounted on door **19** is a loop antenna **41** which terminates at the radio component panel **42** in compartment B. Located within the radio compartment B is loudspeaker **44**. This loudspeaker is attached to the interior side of the front wall **14**. Apertures **46** are provided in the wall **14** and serve for emission of sound from the radio compartment. These apertures also serve to ventilate the compartment B when the door **19** is closed. A tuning dial **49** is mounted in the radio compartment and extends partly outside of side wall **12** through a slot **50** therein. A volume control and on-off switch **52** is also mounted in compartment B and extends partly outside of wall **13** through slot **53**. Thus the radio controls are accessible outside of the casing.

Inside of compartment A is disposed a roll of film **55** carried on spools **56**, **57** at opposite sides of the compartment. The spools are rotated by means of knobs **58**, **59** mounted on the top of the casing. A push button **60** extends out of the top of the casing for operating the shutter of the camera. Also mounted on top of the casing is a fixed view finder **61**. A telescopic view finder is also mounted on top of the casing. This view finder has a movable forward telescopic section **64** provided with a finger gripping element **66** for moving the section **64** in and out of the larger fixed rear section **65**.

In Fig. 3 the flash holder and reflector are removed from the post **26**. In the rear door **17** is located an opening covered by a red light filter **75** for reading the numbers on the outside of the film backing when the door is closed. A lens mount **76** having a lens **77** for the camera is located at the front of the casing, as best shown in Fig. 1.

Casing **10** is preferably made of plastic material or a non-magnetic metal such as aluminum to permit radio signals of maximum amplitude to reach the antenna **41**.

In operation, the battery supplies electric energy to actuate the flash when the button **60** is pressed. The camera compartment contains a suitable synchronizer unit for actuating the shutter and flash simultaneously. The battery **40** also supplies electric energy to actuate the radio. The door **17** can easily be opened by tilting the post **26** laterally to release projections **23**. When this door is opened film **55** can easily be loaded and removed. The door **19** may be opened to provide access to all of the components in the radio compartment B.

There has thus been provided a compact casing for containing all the essential components of a miniature camera and miniature radio in one small cubical container.

In Figs. 1–4, there is shown a U-shaped metal handle **70** which is provided for carrying the combined camera and radio. The handle terminates in end portions offset inwardly toward the sides of the casing. Thumb screws **72** pass through openings in the offset ends and mounted on said screws inwardly of the offset ends are gears **71**. The casing **10** at its sides is formed with elongated narrow vertical grooves or trackways **78** as seen in Fig. 1, the floors of the grooves or trackways being provided with threaded openings **79** at the top, bottom and center thereof to receive the inner threaded ends of the thumb screws for holding the handle in fixed adjusted position

in the top, bottom or center of the grooves or trackways. In the upward and downward movements of the thumb screws, the walls of the grooves or trackways serve as guides.

The gears are offset inwardly toward the sides of the case and their teeth mesh with rack gear teeth on two arcuate links 73. The links 73 at their upper ends pivot on pins 80 secured in a hood 81. An arcuate slot 82 is centrally disposed in each link. In this slot is engaged a pair of pins 83 which guide the links in movement as the gears rotate. The gears are caused to rotate by turning the handle 70 through 180° as indicated by arrow 85 from the bottom of the case to the upper dotted line position shown in Fig. 4. Another pair of arcuate links 85 are located near the front of the case to support the hood. Links 85 pivot on pins 86 on the hood. Arcuate slots 87 engaged with pairs of pins 89 guide the movement of links 85.

When the handle 70 is in the lowermost position as shown in Figs. 1, 3 and 4, the gears and links raise the hood upwardly and forwardly to serve as a light shade or sun shade for the lens 77, and the camera controls on top of the case are made accessible. As the handle is turned to the uppermost position shown in Fig. 2 the hood 81 is retracted by the gears and links and fits flush over the top of the case to cover knobs 58, 59, button 60, view finder 61, and telescopic sight sections 64, 65.

While I have illustrated and described the preferred embodiment of my invention, it is to be understood that I do not limit myself to the precise construction herein disclosed and that various changes and modifications may be made within the scope of the invention as defined in the appended claims.

Having thus described my invention, what I claim as new, and desire to secure by United States Letters Patent is:

1. A combined radio and camera comprising a cubical casing, said casing having a front wall for mounting a lens and provided with a plurality of perforations, a partition dividing the interior of the casing into upper and lower compartments with the perforations opening into the lower compartment, a pair of doors hinged to one side of the casing and closing the rear of said compartments, the lower compartment being adapted to contain an operable radio receiver, said upper compartment being adapted to contain photographic film, a plurality of spaced projections formed on the free ends of said doors and extending laterally therefrom, a post pivotally mounted on the casing and hinged to the bottom thereof, said post having a plurality of spaced recesses in one side shaped to be removably engaged with said projections to hold the doors closed, and a hood retractibly mounted on the casing to cover the casing in one position and to shade a lens on the front wall in another position.

2. A combined radio and camera comprising a cubical casing, said casing having a top wall and a front wall

provided with a plurality of perforations, a partition dividing the interior of the casing into upper and lower compartments for receiving a camera and a radio, repectively, said top wall supporting camera parts, a pair of doors hinged to one side of the casing and closing the rear of said compartments, a post pivotally mounted on the casing and being hinged to the bottom thereof, said post having means to hold the doors closed, the upper end of said post having a recess removably to support a flash bulb holder, a U-shaped metal handle pivotally mounted on the casing, said handle terminating in offset spur gears, a hood shaped to cover the top of the casing, a plurality of arcuate links pivotally supporting the hood, a pair of said links being formed with rack teeth arranged to engage with teeth of said spur gears, each of said links being arcuately slotted, and fixed pins laterally mounted in the casing and engaged in the slots in the bars for guiding movement of the links and hood as the handle is pivoted between upper and lower positions with respect to the casing.

3. A combined radio and camera comprising a cubical casing, said casing having a top wall and a front wall provided with a plurality of perforations, a partition dividing the interior of the casing into upper and lower compartments for receiving a camera and a radio, respectively, said top wall supporting camera parts, a pair of doors hinged to one side of the casing and closing the rear of said compartments, the upper door having a red light filter therein, a post pivotally mounted on the casing and being hinged to the bottom thereof, said post having means to hold the doors closed, the upper end of said post having a recess removably engaging a flash bulb holder, a U-shaped metal handle pivotally mounted on the casing, said handle terminating in offset spur gears, a hood movably mounted over the top of the casing and two pairs of arcuate links pivotally supporting the hood over the casing, one of said pairs of bars having rack teeth engaged with said spur gears, said links and gears being so arranged that the hood is located flush with the top rim of the casing when the handle is located above the casing and the hood is located spaced above the casing when the handle is turned to a position below the casing, the hood being retractable when the doors are in both closed and open positions.

References Cited in the file of this patent

UNITED STATES PATENTS

1,647,551	St. Lawrence	Nov. 1, 1927
2,486,536	Olson	Nov. 1, 1949
2,575,536	Thompson	Nov. 20, 1951
2,718,833	Roth	Sept. 27, 1955
2,771,526	Claras et al.	Nov. 20, 1956

OTHER REFERENCES

Washington Shopping News, Nov. 8, 1948, "Air King Camera-Radio."