April 10, 1956 C. SURICO 2,741,357

DRIER FOR STRINGS HANGING FROM STICKS

Filed April 13, 1950 5 Sheets-Sheet 1

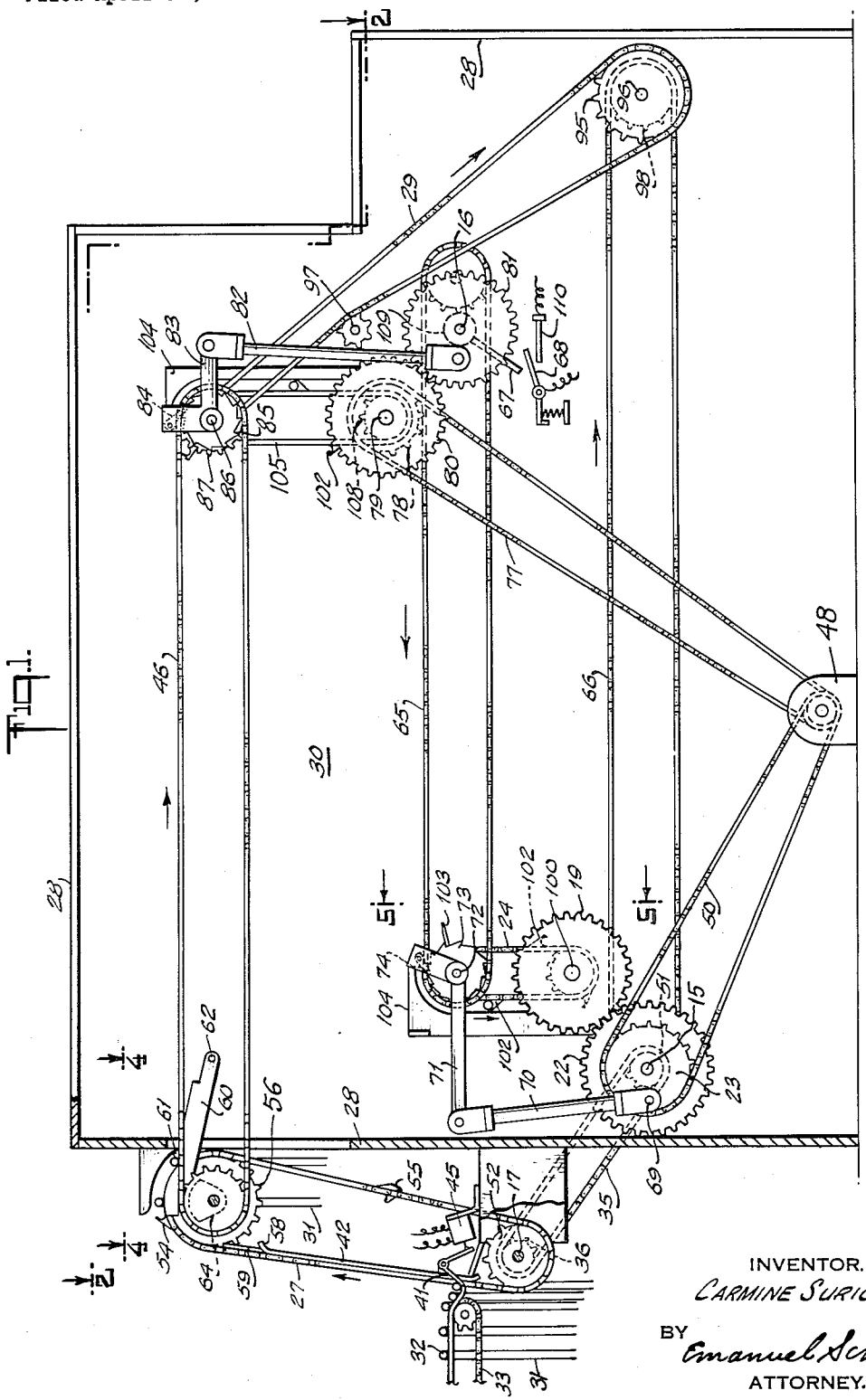

FIG. 1.

INVENTOR.
CARMINE SURICO.
BY Emanuel Scheyer
ATTORNEY.

April 10, 1956 C. SURICO 2,741,357

DRIER FOR STRINGS HANGING FROM STICKS

Filed April 13, 1950 5 Sheets-Sheet 2

Fig. 4.

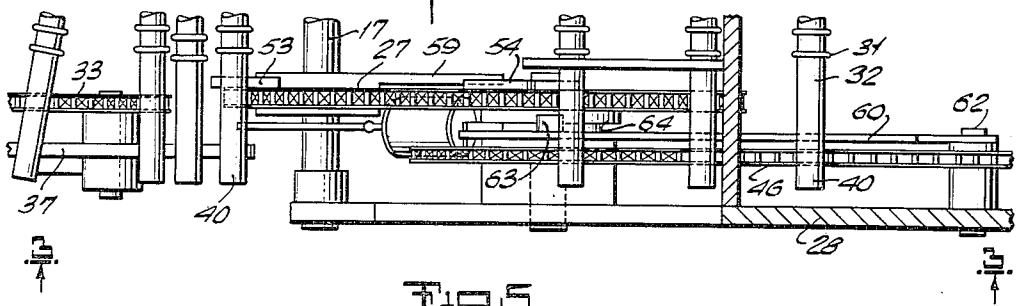

Fig. 5.

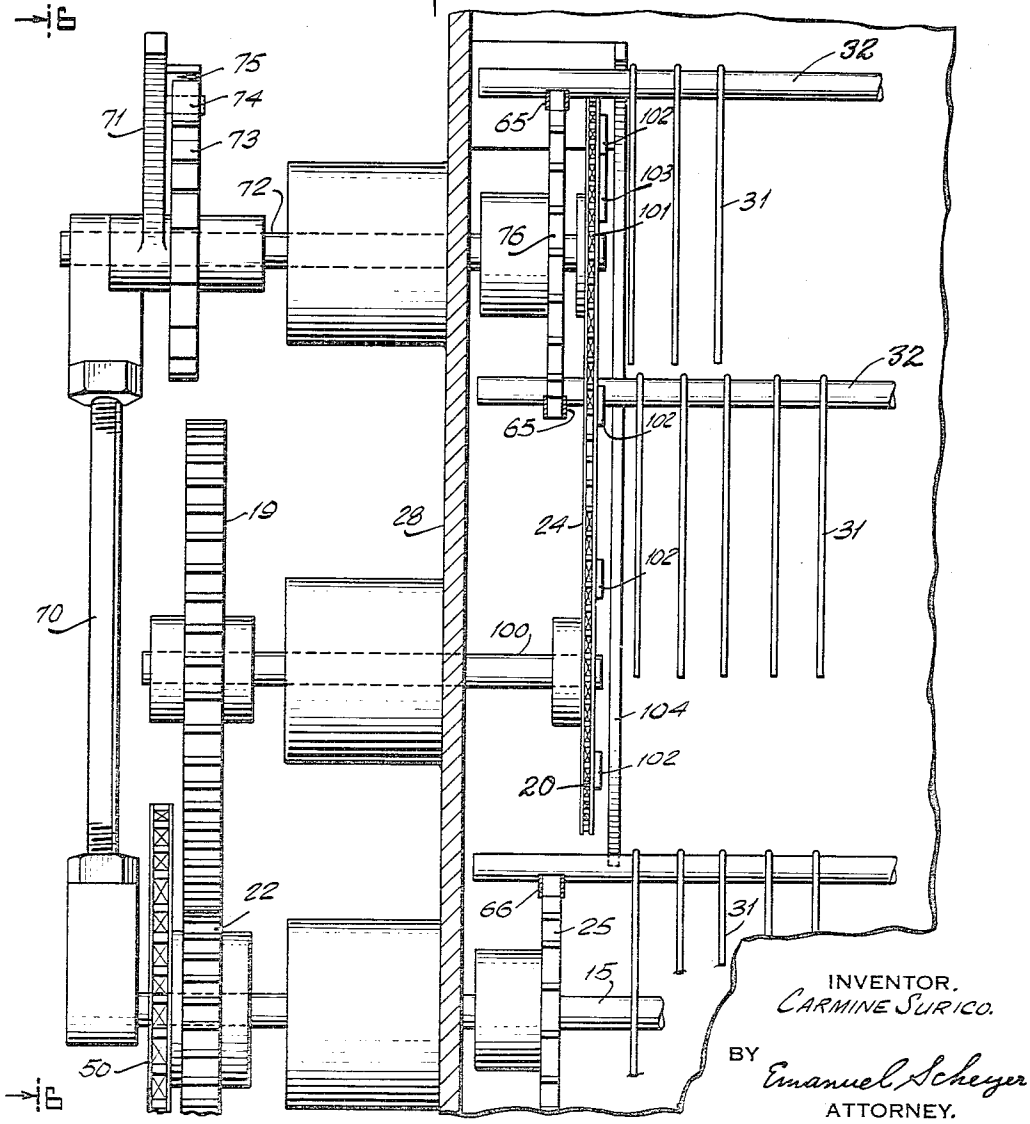

INVENTOR.
CARMINE SURICO.

BY Emanuel Scheyer
ATTORNEY.

April 10, 1956 C. SURICO 2,741,357

DRIER FOR STRINGS HANGING FROM STICKS

Filed April 13, 1950 5 Sheets-Sheet 3

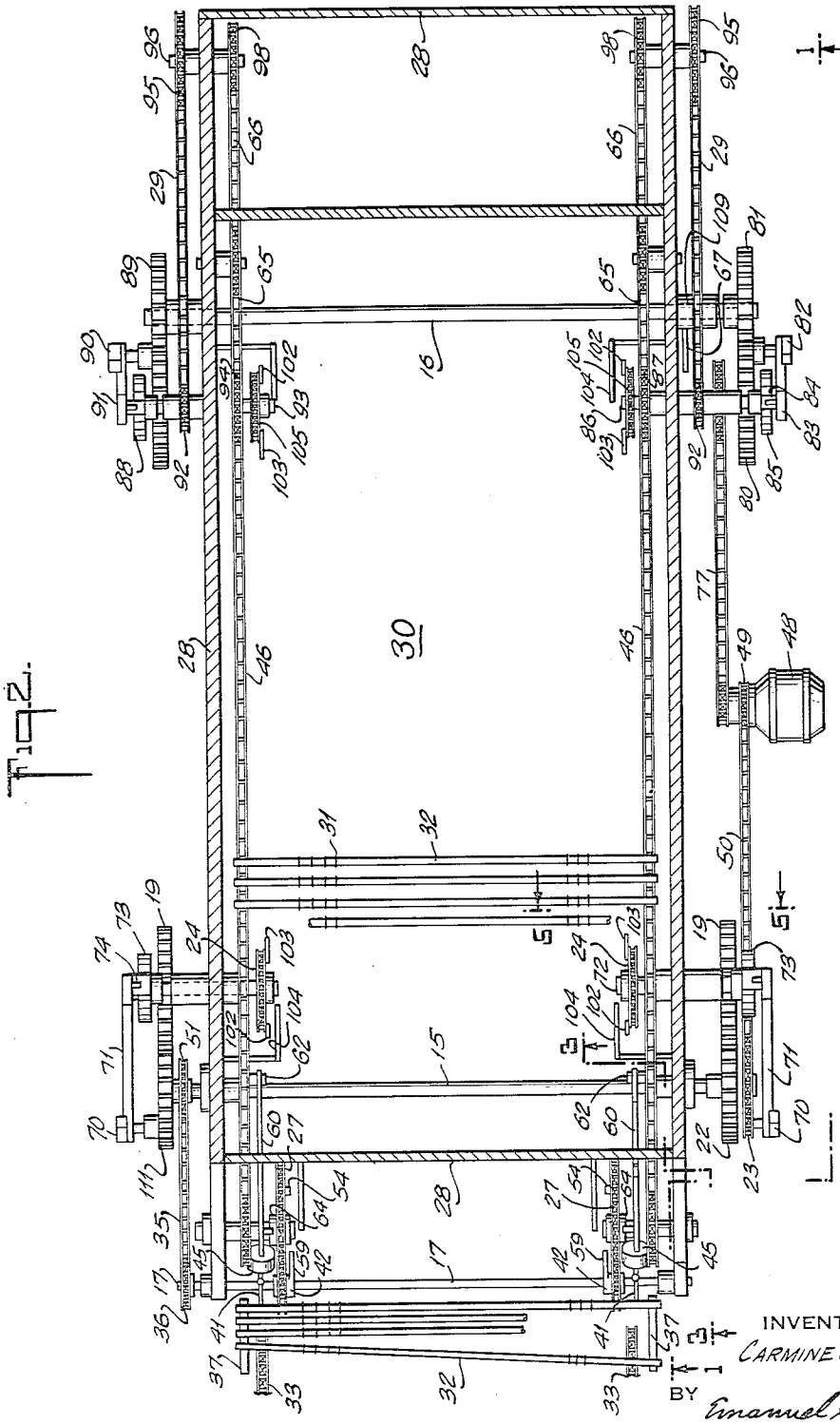

FIG. 2.

INVENTOR.
CARMINE SURICO.
BY Emanuel Scheyer
ATTORNEY.

April 10, 1956 C. SURICO 2,741,357

DRIER FOR STRINGS HANGING FROM STICKS

Filed April 13, 1950 5 Sheets-Sheet 4

Fig. 6.

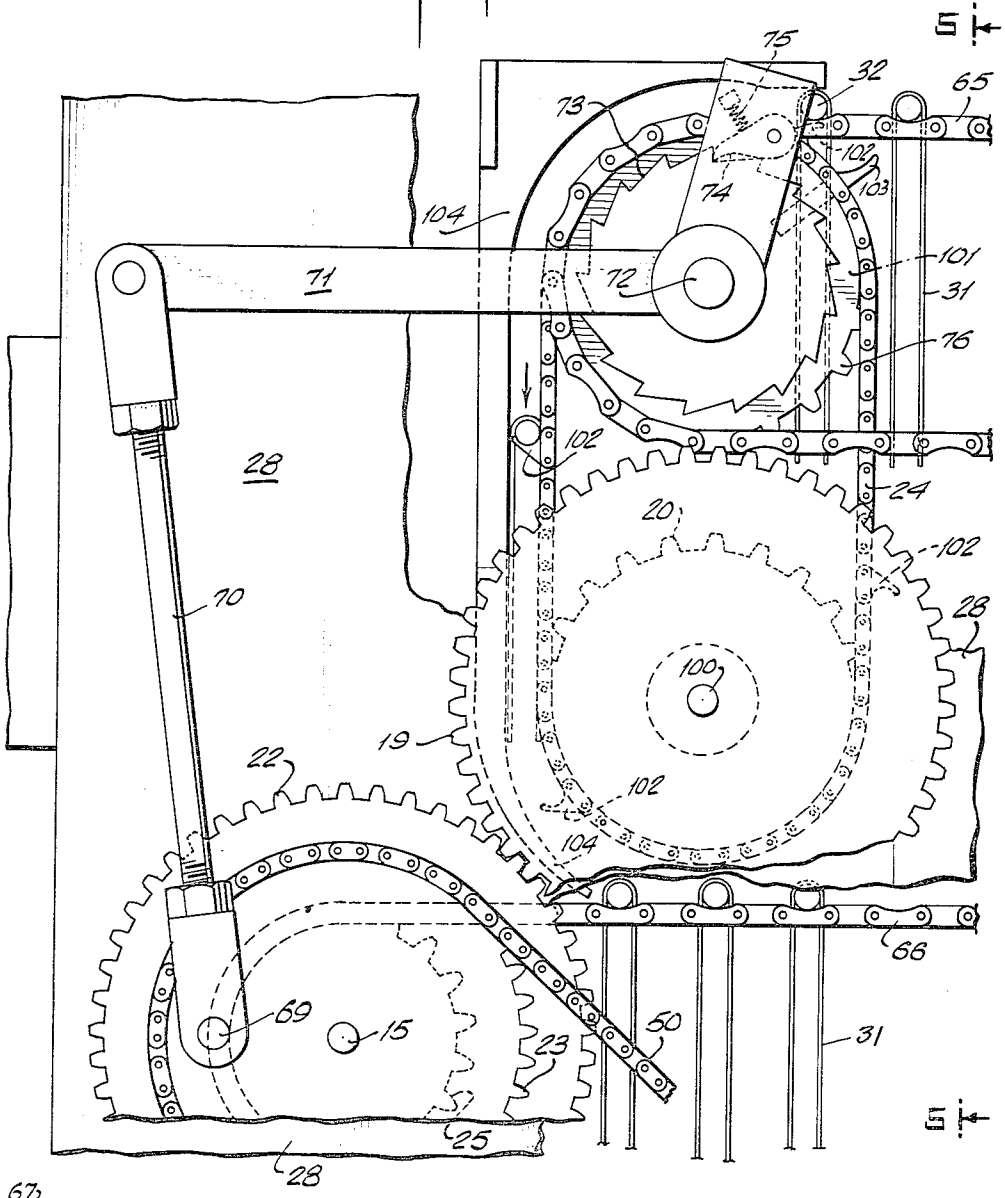

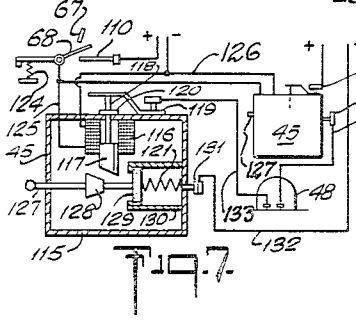

Fig. 7.

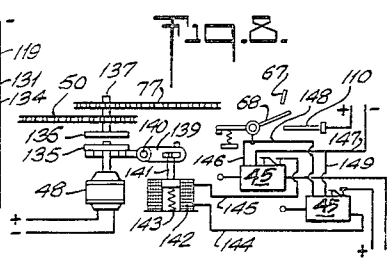

Fig. 8.

INVENTOR.
CARMINE SURICO.

BY Emanuel Scheyer
ATTORNEY

April 10, 1956 C. SURICO 2,741,357

DRIER FOR STRINGS HANGING FROM STICKS

Filed April 13, 1950 5 Sheets-Sheet 5

14 41

Fig. 3.

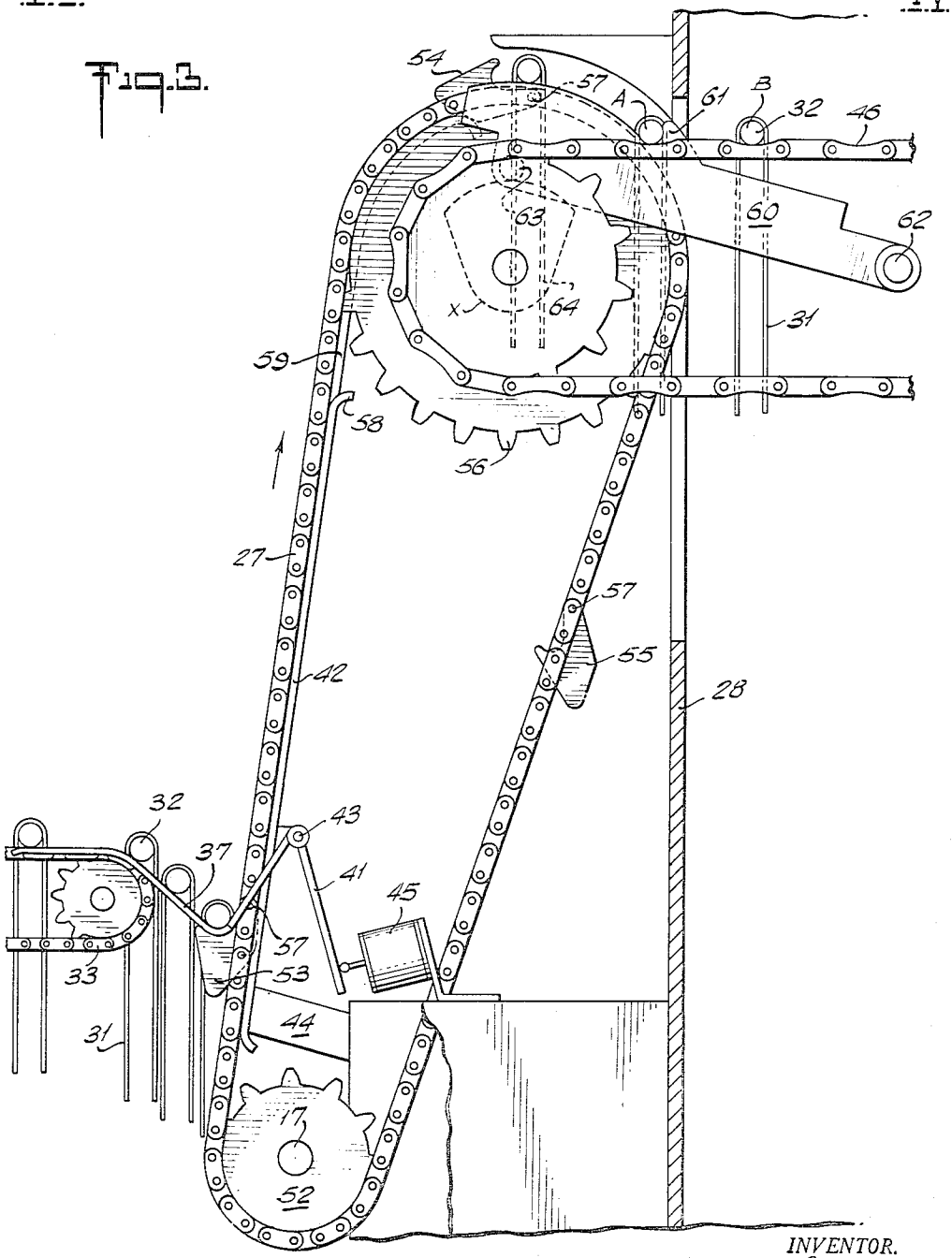

INVENTOR.
CARMINE SURICO
BY
Emanuel Scheyer
ATTORNEY.

United States Patent Office 2,741,357 Patented Apr. 10, 1956

2,741,357

DRIER FOR STRINGS HANGING FROM STICKS

Carmine Surico, Brooklyn, N. Y., assignor to Clermont Machine Co. Inc., Brooklyn, N. Y., a corporation of New York

Application April 13, 1950, Serial No. 155,597

7 Claims. (Cl. 198—21)

This invention relates to a machine for drying noodles, spaghetti, macaroni and other string-like products. While primarily designed for drying edible strings of material, it can be used for drying strings of material other than edible ones, such as textile yarns and synthetic monofilaments. In the specification, the term "macaroni" will be used, but it is to be understood that said term is intended to be broad enough to cover other strings of material as noted above where consistent with the context.

The machine is constructed to dry macaroni which are looped over sticks or rods. It is the practice in the art, to dry macaroni or other edible strings by hanging them on sticks. Each stick has a row of strings looped over it. The devices, which produce the strings and mount them on sticks, form no part of this invention. Such devices deliver the sticks with the strings hanging from them at a more or less random rate.

It is an object of the present invention to receive the sticks from said devices and to mount them in preferably evenly spaced relation on intermittently moving conveyers which carry the sticks through a drying chamber having controlled moisture, air circulation, and temperature. In fact, the conveyers only move when a stick is delivered to them. Upon such delivery, they move a predetermined amount. The conveyers move step by step as successive sticks are delivered to it.

A further feature of my drier is the provision of mechanism which sees to it that a stick is properly set on the conveyers before the latter are caused to have a step of motion. This is necessary to prevent the disarrangement of the sticks and the entanglement of their strings as they move from one conveyer to another and leave the discharge end of the last conveyer.

In order to prolong the time the strings spend in the drying chamber, a plurality of drying conveyers, moving in synchronism, are provided, the sticks passing successively from one conveyer to the next.

The drier comprises broadly four types of mechanism. (1) A conveyer for lifting off the sticks with their strings from the delivery or feed-in conveyor of the machine which produces the macaroni. (2) The horizontally moving drying conveyers for carrying the sticks with their strings through the drying chamber. (3) The transfer conveyers which deliver the sticks and their strings down from one conveyer to the next lower one, and (4) the ratchet mechanism for causing the drying conveyers to be given their step by step motion.

Other objects and advantages will become apparent upon further study of the description and drawings, in which:

Fig. 1 is an elevation of the drier taken along the line 1—1 of Fig. 2, the front wall of the drier being considered to be transparent for the purposes of clarity in the drawing.

Fig. 2 is a plan of the drier taken along the line 2—2 of Fig. 1.

Fig. 3 is a partial elevation to an enlarged scale taken along the line 3—3 of Figs. 2 and 4, and showing the pick-up conveyer and adjacent portions of the feed-in conveyer and of the top drying conveyer.

Fig. 4 is a partial plan to an enlarged scale taken along the line 4—4 of Figs. 1 and 3 and corresponding to the portion of the drier shown in Fig. 3.

Fig. 5 is a partial elevation to an enlarged scale of the ratchet feeding mechanism at the left end of the second drying conveyer, said figure being taken along the line 5—5 of Figs. 1, 2 and 6.

Fig. 6 is a partial section to an enlarged scale taken along the line 6—6 of Figs. 2 and 5.

Fig. 7 is a diagram of the electrical system using a direct motor drive, and

Fig. 8 is a diagram of the electrical system using a clutch drive.

Actually, the drier has greater length relatively to its width than shown in Figs. 1 and 2. It is shown relatively shorter because of the limitations of the drawings.

The drier has enclosing walls 28, which form a chamber 30 through which the loops of macaroni 31 are conveyed for their drying and tempering. Such a chamber is provided with devices, not shown, for subjecting it to control of its temperature, humidity and flow of air therethrough as is well known in the art.

The macaroni 31 are hung on sticks 32 which are mounted on a feed-in conveyer 33 which is run as part of the macaroni making machine, not shown, as it forms no part of this invention. As is usual in the art, the sticks are carried along on conveyer 33 at random spacing and even in positions other than at right angles to the direction of motion of said conveyer as note the extreme left stick 32, Fig. 2. As the sticks approach the end of conveyer 33, they come upon guides 37, Figs. 2, 3 and 4. There is a guide 37, as seen in Fig. 2, on each side of the machine. The free ends of the sticks 32 rest on the chains of conveyer 33 and as they approach the end of said conveyer, on the guides 37, Fig. 4, before the sticks pass off from the conveyer, Fig. 3. When once on the incline of guides 37, sticks 32 move down by gravity. As seen in Fig. 4, the free end 40 of a stick 32, is its portion beyond where the macaroni 31 hang.

Lever 41 is loosely mounted on stub shaft 43 which in turn is supported from chain guide 42, Fig. 3. Chain guide 42 is supported by bracket 44, Fig. 3. There is a chain guide 42 on each side of the drier for backing up each pick-up conveyer chain 27, as will be explained. Adjacent and to the rear of each lever 41, is a limit or microswitch, switch 45, which is adapted to be actuated when its corresponding lever 41 is swung counter-clockwise about its short shaft 43. As will be explained later on, the drier is given a cycle of motion only when both switches 45 are actuated at any one time, that is both levers 41 must be pressing against the switches. This can occur only when a stick 32 slides down the inclined portion of guides 37 and has both of its ends pressing against levers 41. When so pressing levers 41, a stick is set at right angles to the direction of motion of pick-up conveyer 27, which latter, as will be explained, picks up the sticks and deposits them on top conveyer 46. When a stick, which is set crookedly on feed-in conveyer 33, such as the extreme left stick in Fig. 2, reaches the inclined portion of guides 37, one end of the stick will slide down its guide and press against its lever 41 before the other end of the stick reaches its lever 41. In such a case, because only one switch 45 is actuated, the cycle of motion of the drier will not begin. It does not begin until the other end of the stick has had time to swing around to contact its lever 41. When the latter contact is consummated, the stick is at right angles to the direction of motion of pick-up conveyer 27, both switches are

actuated, and the cycle of motion is begun. This will be made clear when Figs. 7 and 8 are described.

Motor 48 which furnishes the driving power for the drier, is caused to run when both switches 45 are actuated. Sprocket 49 on the motor shaft drives chain 50 which in turn drives sprocket 23, Fig. 1, fixed to shaft 15 which is journaled in the walls 28 of the drier. Fixed to the opposite end of shaft 15 is a sprocket 51 which engages chain 35. Sprocket 36, which is fixed to shaft 17, is driven by chain 35.

Shaft 17 carries fixed to it sprockets 52, Figs. 1 and 3, for driving pick-up conveyer chains 27, the top of said chains passing over idler sprockets 56. Each conveyer chain 27, in the embodiment shown, is provided with three weighted pick-up hooks 53, 54 and 55 equally spaced and pivoted to the chain at a chain pin 57. The distance between the hooks equals the circumference of a sprocket 56. Sprockets 56 make one revolution for each cycle of motion of the drier. This means that for each cycle of motion of the drier, the lower pair of hooks 53, only the near one of the pair being shown in Fig. 3, is moved to the top position shown for hooks 54, for discharging a stick 32 picked up while in the lower position in the previous cycle.

The left hand run of each pick-up conveyer chain 27, Fig. 3, is provided with a guide 42 along which this chain run slides on its way up from driving sprocket 52 to idler sprocket 56. The top end of chain guide 42 is terminated at the bent back portion 58. The guide 59 shown continuing on upward in Fig. 3 past portion 58, is on the far side of the chain on a line with pick-up hooks 53 and 54. The back portion of hooks 53, 54 and 55 slides along guide 59 as they pass up along it. A similar guide is provided for the other hooks 53, 54 and 55 on the far pick-up chain 27, said latter hooks not being shown. When a pick-up hook, such as hook 55, Fig. 3, is clear of guide 59, it hangs in a position determined by its center of gravity. Upon reaching guide 59, the hook, such as hook 53, is swung into such a position that a stick 32 can move into it. There being two hooks 53, each end of a stick 32 is set in a hook. When a stick passes into the hooks it presses against levers 41 turning them to actuate switches 45. As previously explained, only when both ends of a stick press levers 41 to actuate both switches 45, is the drier given a cycle of motion. During this cycle of motion, pick-up conveyer chains 27 carry hooks 53 up. On the way up, the hooks are kept in position to retain the stick by sliding along guide 59. Upon reaching the position shown for hook 54, said hook is guided so that the stick is discharged to move by gravity along the curved upper edge of stop bars 60, the near bar only being shown in Figs. 3 and 4. The gravity motion of the stick is stopped by hooks 61 formed on bars 60. At the time the stick is stopped, the relative spatial adjustments of the various parts of the drier are such that the stick sets in depressions in the chains of top horizontally running drying conveyer 46. The ability of the hooks to pivot about their pins 57, permits the hooks to swing out of the way when the sticks are caught by bars 60.

Stop bars or rectifying members 60 are provided at one end with a pivotal support 62 on housing walls 28. Near the other end, said bars are each provided with a cam roller 63, which rolls on a cam 64. Cams 64 are fixedly attached to idler sprockets 56 of pick-up conveyor chains 27. Cams 64 are set in such rotational relation with pick-up conveyers 27 and stop bars 60, that point X on the cams is under rollers 63 at the end of a cycle of motion of the drier. This means that at the beginning of the next cycle of motion, during which conveyer 46 is given a step of motion, as will be explained, hooks 61 on bar 60 will be depressed permitting a stick 32 on the conveyer 46 to pass along as the conveyer moves. As noted above, sprocket 56, to which cam 64 is fixed, is given one revolution for each cycle of motion of the drier.

For each cycle of motion of the drier, the drying conveyers, are given a step of motion, the drying conveyers being the top conveyer 46, the middle conveyer 65 and the bottom conveyer 66. A step of motion corresponds to the motion of a stick 32 from the position A to the position B shown for the sticks on top conveyer 46, Fig. 3.

The mechanism for effecting the steps of motion for the drying conveyers during one cycle of motion of the drier will now be described. It will be described in connection with the particular mechanism for moving the middle conveyer 65 as seen in Figs. 1, 5 and 6.

As noted above, motor 48 is caused to run when both switches 45 are actuated. It will run until the current is cut off from it by an arm 67 projecting from hub 109 fixed to shaft 16. As will be explained, shaft 16 is run by motor 48 through the intermediacy of several chains, sprockets and gears. Lug 67, when shaft 16 has turned one revolution, which it does for each cycle of motion of the drier, will close the gap between contacts 68 and 110 and stop the motor 48 as will be more fully explained. This contact occurs when point X on cams 64 are under rollers 63. The energization of the motor is stopped when the drier has been given one cycle of motion, which corresponds to one revolution of sprocket 56.

Sprocket 23 has an eccentrically placed pivot pin 69 upon which connecting rod 70 is pivotally mounted. The upper end of rod 70 is pivotally connected to bell crank 71, the latter being pivotally or loosely mounted on short shaft 72. Ratchet wheel 73 is fixedly mounted on shaft 72. Bell crank 71 has a pawl 74 pivoted to it, the pawl being pressed by spring 75 to engage the teeth of ratchet wheel 73. The relative gear ratios are such that sprocket 23 is given one revolution for a cycle of motion of the drier, which means that bell crank 71 is given one reciprocation causing pawl 74 to turn ratchet wheel 73 through the angular distance of one tooth. Driving sprocket 76 is fixed to shaft 72, and the relative sizes of the various parts is such that the motion imparted by pawl 74 causes the near middle conveyer chain 65 to move two links for each cycle of motion. As seen partly in Fig. 2 there are a corresponding connecting rod 70, bell crank 71, ratchet wheel 73 and pawl 74 on the far side of the drier simultaneously driven by shaft 15 and gear 111 fixed to it, and moving the far middle conveyer chain 65 two links for each cycle of motion in unison with the near conveyer chain 65.

Top conveyer 46 is given a similar step by step motion to that just described for the middle conveyer. The motor 48 drives chain 77 which meshes with sprocket 78 fixed to short shaft 79. Gear 80 is also fixed to shaft 79, said gear meshing with gear 81 fixed to shaft 16. Connecting rod 82 is eccentrically mounted on gear 81, said rod being pivotally connected to bell crank 83. Gears 80 and 81 make one revolution for each cycle of motion. A pawl 84 is pivotally mounted on crank 83 in a manner similar to the mounting of pawl 74 on crank 71. Pawl 84 is adapted to engage the teeth of ratchet wheel 85 in a manner similar to the engagement of pawl 74 with ratchet wheel 73, ratchet wheel 85 being fixed to short shaft 86. Sprocket 87 is fixed to shaft 86 and driven by it. Top conveyer chain 46 is thus intermittently driven by sprocket 87. In a similar manner, far top conveyer chain 46 is driven by far ratchet 88, through the intermediacy of shaft 16, gear 89 fixed to said shaft, a connecting rod 90, eccentrically mounted on said gear, bell crank 91 having a pawl not shown, similar to pawl 84 on the near side. Ratchet wheel 88 is fixed to short shaft 93. Sprocket wheel 94 is fixed to short shaft 93 and drives far conveyer chain 46.

Bottom conveyer 66 is driven from the top conveyer 46. Near sprocket wheel 92, Fig. 2, is fixed to short shaft 86 and far sprocket wheel 92 is fixed to far short shaft 93. Chains 29 connect sprocket wheels 92 with sprocket wheels 95 on the outer ends of short shafts 96 suitably mounted in walls 28. Idler sprockets 97, Fig.

1, guide chains 29. Sprockets 98 are fixed to the inner ends of shafts 96 and drive bottom conveyer chains 66. The front ends of conveyer chains 66 run on idler sprockets 25 loose on shaft 15, Figs. 5 and 6.

The mechanism for transferring the sticks 32 with their macaroni from middle conveyer 65 to bottom conveyer 66 will now be described. Similar mechanism is used to transfer the sticks from the top conveyer 46 to the middle conveyer 65.

Referring particularly to Figs. 5 and 6, it will be seen that near side gear 22, which is fixed to shaft 15 meshes with gear 19 fixed to short shaft 100. Gear 111 on the far side of shaft 15 meshes similarly with far side gear 19. Both gears 19 make one revolution in unison for each cycle of motion of the drier. From here on, the near side gear 19, and its cooperating mechanism will be described, but it is to be understood that similar cooperating mechanism is provided on the far side. Fixed to the opposite side of shaft 100 from gear 19 is a driving sprocket 20 which meshes with a transfer chain 24. The upper end of chain 24 runs over idler sprocket 101 which is loose on shaft 72. Hooks 102 are rigidly attached to chain 24. In the particular embodiment shown there are four hooks 102 provided on chain 24. Idler sprocket 101, which is directly behind sprocket 76 on shaft 72, Fig. 6, has hook or finger 103 fixed to it. As sprocket 101 rotates, it carries hook 103 against the last stick 32 on middle conveyer 65, pushing said stick off therefrom so that it moves over chain 24 until it is caught by the top hook 102 on the chain which is timed to be near the top and on its way down, in proper position to receive the stick. The hook 102 at the top, Fig. 6, has not yet reached said position. A guide 104 is provided adjacent the downward run of chain 24 to prevent sticks 32 from coming off hooks 102. When top hook 102 carries a stick to near the bottom of the downwardly traveling run of chain 24, it discharges said stick against the bottom curved portion of guide 104 which causes the stick to move by gravity onto bottom conveyer chain 66.

Similar mechanism to that just described is provided to transfer sticks 32 from top conveyer 46 to middle conveyer 65. Transfer chain 105 on the near side runs at its top on an idler sprocket, not seen, which is loose on shaft 86. See Fig. 1. The near side is taken to be at the bottom of Fig. 2. The bottom of near transfer chain 105 is driven by sprocket 108, Fig. 1, which is fixed to shaft 79. Chain 105 carries hooks 102 in a similar manner to that already explained for transfer chain 24. On the far side a similar transfer chain 105 is provided having hooks 102 in manner similar to near transfer chain 105.

In Fig. 7 the type of electric control shown, operates the drier directly by the controlled motion of motor 48. Said motor is at rest, except when the drier is being given its cycles of operation.

Each limit or microswitch 45 comprises an insulative housing 115 in which is mounted a solenoid 116. The core 117 of the solenoid is provided with a stem 118 which projects through the top of housing 115 into engagement with spring terminal 119. Terminal 119 normally holds core 117 spring pressed down out of the solenoid 116, the downward travel of said core and stem 118 being limited by collar 120 fixed to the stem. One terminal of the solenoid coil 116 is connected by wire 125 to the pivot of pivotally mounted contact 68, which is pulled by tension spring 124 for rotational bias in a counterclockwise direction. Contact 68 is momentarily swung in a clockwise direction at the end of each cycle by finger 67 mounted on shaft 16, Figs. 1 and 2, it being remembered that shaft 16 rotates once for each cycle. When contact 68 is swung by finger 67 it engages spring contact 110, momentarily closing the circuit to source through the coil of solenoid 116 by means of wires 125 and 126. When the latter circuit is closed core 117 is retracted against the pressure of spring terminal 119. Bar 127 has tapered collar 128 fixed to it at an intermediate portion and a disc 129 fixed to it at its right end. Disc 129 is slidably mounted in a cylindrical guide 130. At its other end bar 127 is slidably mounted in housing 115. Compression spring 121 in guide 130 between disc 129 and housing 115, normally keeps bar 127 fully extended from the left of the housing as shown in Fig. 7. The bulbous left end of bar 127 is normally lightly pressed against by pivotally mounted lever 41 as seen in Figs. 1, 2 and 3. This is so, as long as no end of a stick 32 presses against lever 41. When the end of a stick slides down guide 37 against lever 41, bar 127 is pushed in, so that collar 128 passes under the beveled lower end of core 117, raising the latter thereby against the pressure of spring terminal 119. Once collar 128 passes core 117, the latter snaps down preventing the release of bar 127 to the left. This contact is broken when solenoid 116 is energized, releasing bar 127. When collar 128 and core 117 are in contact, the circuit is closed between terminal 119 and terminal 131 of the left hand switch 45 of Fig. 7. Wire 132 connects said terminal 131 with one side of the source. The closing of the circuit between contacts 68 and 110 also energizes a similar solenoid 116 not shown, which is present in the right hand switch 45, diagrammatically shown in Fig. 7. This will release its bar 127 should it happen to have been pushed in by the end of a stick. The circuit through motor 48 is closed only when both bars 127 are pushed in by the ends of a stick. This closes the circuit from the plus wire of the source through contacts 119 and 131, not shown, of the right hand switch 45, through wire 134 to the right terminal of motor 48, through the motor to its left terminal, from its left terminal through wire 133 to terminals 119 and 131 of the left hand switch 45 and finally through wire 132 back to the source.

In the modification shown in Fig. 8, motor 48 is always connected to the source so that its runs continuously. Feathered to the motor shaft is a friction disc 135. Fixed opposite said disc, on an aligned shaft 137, is a mating friction disc 136. A forked lever 139, rotatably mounted on pivot 140, engages disc 135 for sliding it into and out of frictional contact with disc 136. When said discs are in contact, conveyers 50 and 77 are caused to run operating the drier. Linked to the right end of lever 139 is core 141 of solenoid 142. When solenoid 142 is energized, core 141 is withdrawn into the solenoid against the pressure of spring 143. Solenoid 142 is energized when both switches 45 are closed, as explained for Fig. 7, the current passing from the plus source wire through the lower switch 45, through wire 144 to one terminal of solenoid 142, through the solenoid, out its other terminal, through wire 145 to the upper switch 45, through the latter switch back to the source. When contacts 68 and 110 are momentarily closed, switches 45 are tripped open by the current flowing through their solenoids 116, not shown. The tripping current flows from the plus source wire through contacts 110 and 68, through wire 146 into the releasing solenoid of the upper switch 45, said solenoid not being shown, from said solenoid through wire 147 back to source. For the lower switch 45, the current flows from the plus source wire through contacts 110 and 68 through wire 148 to the releasing solenoid, not shown, of the lower switch 45, from said solenoid through wires 149 and 147 back to source.

The operation of the drier is as follows:

Feed-in conveyer 33, delivers sticks 32 with their macaroni strings to pick up conveyer 27. The cycle of motion of the drier is started when the sticks leaving feed-in conveyer 33 have their ends operate both switches 45. Each end of a stick must actuate its corresponding switch before the cycle of motion is started. This is to ensure that each end of a stick is engaged at the same time by a hook 53 on the pick-up conveyer chains 27. A crooked

stick, such as the extreme left stick, Fig. 2, will operate only one switch 45 and not start the electrically controlled mechanism for giving the drier a cycle of motion. Conveyer chains 27 deliver a stick to move by gravity on stop bars 60 until each end of the stick engages a hook 61 on a stop bar. This ensures that the stick is straight when it is carried along through the drier by top conveyer 46. At the beginning of a cycle of motion, the stop bars are permitted to swing down by gravity by cam 64 into inoperative position. Simultaneously top conveyer 46 is given a step of motion, carrying the stick received, away from the stop bar for its first step of motion through the drier. This step of motion is effected for all the conveyers by the operation of ratchet wheels 73, 85 and 88. From top conveyer 46, the sticks and their macaroni are transferred successively by transfer conveyers 105 and 24 to middle and bottom conveyers 65 and 66. The conveyance of the sticks and their macaroni step by step through the drying chamber formed by walls on housing 28 effects the drying of the macaroni. When properly dried they are discharged from the drier by bottom conveyer 66.

Stop bars 60 with their cams 64 to ensure straight setting sticks may be provided by those skilled in the art at other locations at the beginning of conveyer runs in addition to being provided at the beginning of the runs of conveyer 46.

I claim:

1. In a drier for strings of material depending from sticks, a plurality of conveyers for successively conveying the sticks, electrically controlled mechanism in operative connection with the conveyers, said mechanism, when actuated, moving the conveyers in synchronism through a predetermined cycle, electrical contact devices connected to said mechanism and set adjacent to one of the conveyers, one of said devices being mounted to each side of said conveyer, each device being located to be engaged by the end of a stick being received by said conveyer, the engagement of the end of a stick with a device causing the device to be actuated, said devices being so connected electrically to the electrically controlled mechanism that the latter is actuated only when both devices are engaged concurrently by a stick.

2. A drier comprising a drying conveyer formed to carry sticks thereon in maintained spaced relation, said sticks having strings depending therefrom, a second conveyer for delivering the sticks received by it to the drying conveyer, switch mechanism located at the receiving end of the second conveyer, said mechanism having a part located substantially at each side of the second conveyer, electrically controlled mechanism each time when actuated effecting a step of motion of the drying conveyer, members movably mounted on the drier, each member being located to engage one of said parts and to engage the end of a stick being delivered to the second conveyer, the pressure of the end of a stick against a member moving the member to actuate its corresponding switch part, the switch parts being so connected to the electrically operated mechanism that the latter is actuated only when both ends of a stick press against said members.

3. A drier comprising a drying conveyer for carrying sticks thereon in spaced relation, said sticks having strings depending therefrom, a second conveyer for delivering the sticks received by it to the drying conveyer, electrical contact devices located at the receiving end of the second conveyer, one of said devices being located adjacent each side of the second conveyer, electrically controlled mechanism when actuated effecting a step of motion of the drying conveyer, members movably mounted on the drier, each member being located to engage one of said devices and to be engaged by the end of a stick being received by the second conveyer, the pressure of a stick against a member causing the member to actuate its corresponding device, said devices being so connected to the electrically operated mechanism that the latter is actuated only when

both devices are actuated concurrently by a stick, a pair of stops movably mounted, one adjacent each side of the drying conveyer at its receiving end, to block a stick from being moved along by the drying conveyer when the stops are in operative position, said stops permitting a stick to pass when the stops are in inoperative position, said stops being in operative connection with the electrically controlled mechanism, the latter effecting the motion of the stops into their operative and inoperative positions in predetermined relation to the motion of the conveyers.

4. A drier comprising a drying conveyer to carry sticks along in spaced relation, a receiving conveyer for receiving the sticks at one end and discharging them at its other end for their transference to the drying conveyer, swingably mounted members, one member being located at each side of the conveyers, each member overlapping both conveyers adjacent the discharge end of the receiving conveyer, and receiving the sticks discharged from the receiving conveyer with each end of a stick setting on a member, said members being formed to guide the sticks along them from the receiving conveyer to the drying conveyer, an upward projection forming a fixed part relatively to each member for arresting the travel of a stick along the drying conveyer, when the member is set in one position, means for swinging the members out of said position to move the projections out of the way of a stick to permit its travel along the drying conveyer, electrically controlled mechanism in operative connection with the conveyers and means for swinging the members, said mechanism, each time when actuated, moving the conveyers and swinging the members in synchronism through a predetermined cycle.

5. In a drier for strings of material depending from sticks, a plurality of conveyers for successively conveying the sticks, switch mechanism adjacent to one of the conveyers located to be engaged by the sticks in passing, electrically operated mechanism in operative connection with the conveyers and constructed to move the conveyers in synchronism, said electrically operated mechanism being in electrical connection with the switch mechanism, and moving the conveyers when said electrically operated mechanism is actuated, said switch mechanism when engaged by a stick actuating the electrically operated mechanism, and a trip operatively connected to the conveyers to move in accordance with the motion of all of them, said electrically operated mechanism having a portion located to be engaged by the trip in intervals of its motion of substantially equal extent, said engagement inactivating the electrically operated mechanism, said switch mechanism comprising two parts, one of which is located at each side of a conveyer and in position to be engaged by the end of a stick in passing, the electrically operated mechanism being actuated only when both of said parts are in engagement with a stick.

6. In a drier for strings of material depending from sticks, a plurality of conveyers for successively conveying the sticks, switch mechanism adjacent to one of the conveyers located to be engaged by the sticks in passing, electrically operated mechanism in operative connection with the conveyers and constructed to move the conveyers in synchronism, said electrically operated mechanism being in electrical connection with the switch mechanism, and moving the conveyers when a circuit through it is closed, said switch mechanism when engaged by a stick closing the circuit through the electrically operated mechanism, and a trip suitably mounted to move in accordance with the conveyers for effecting the breaking of the circuit through the electrically operated mechanism, said switch mechanism comprising two parts, one of which is located at each side of a conveyer and in position to be engaged by the end of a stick in passing, the circuit for operating the electrically operated mechanism being closed only when both of said parts are in engagement with a stick.

7. In a drier for drying strings depending from sticks,

a plurality of conveyers for successively conveying the sticks, one of the conveyers adapted to receive the sticks substantially at one end and discharge them substantially at its other end to a second conveyer, a pair of movably mounted members, one of the members being located at each side of the receiving conveyer and said second conveyer, each member overlapping both said receiving and said second conveyers adjacent the discharge end of the receiving conveyer, and receiving the sticks discharged from the receiving conveyer with each end of a stick setting on a member, said members being formed to guide the sticks along them from the receiving conveyer to the second conveyer, an upward projection forming a fixed part relatively to each member for arresting the travel of a stick along the second conveyer when the member is set in one position, means for moving the members out of said position to move the projections out of the way of a stick to permit its travel along the second conveyer,

mechanism in operative connection with the receiving conveyer, the second conveyer and the means for moving the members for effecting their motion in timed relation to control how the sticks set on the second conveyer.

References Cited in the file of this patent

UNITED STATES PATENTS

219,871	Olin	Sept. 23, 1879
1,352,329	Tschache	Sept. 7, 1920
1,395,727	Odermatt	Nov. 1, 1921
1,782,481	Shipley	Nov. 25, 1930
1,901,928	Olson	Mar. 21, 1933
1,907,458	Stevenson	May 9, 1933
1,954,278	Adams	Apr. 10, 1934
1,998,912	Troy	Apr. 23, 1935
2,246,675	Gronemeyer	June 24, 1941
2,600,135	Sower	June 10, 1952
2,606,644	Saborsky	Aug. 12, 1952