(12) INTERNATIONAL APPLICATION PUBLISHED UNDER THE PATENT COOPERATION TREATY (PCT)

(19) World Intellectual Property Organization
International Bureau

(43) International Publication Date
7 July 2016 (07.07.2016)

WIPO | PCT

(10) International Publication Number
WO 2016/107689 A1

(51) International Patent Classification:
C23C 14/22 (2006.01) *C23C 14/50* (2006.01)
B29D 11/00 (2006.01) *C23C 14/54* (2006.01)
C03C 17/22 (2006.01) *G02B 1/00* (2006.01)
C23C 14/26 (2006.01)

(21) International Application Number:
PCT/EP2015/075338

(22) International Filing Date:
30 October 2015 (30.10.2015)

(25) Filing Language: English

(26) Publication Language: English

(30) Priority Data:
62/099,009 31 December 2014 (31.12.2014) US

(71) Applicant: **ESSILOR INTERNATIONAL (Compagnie Générale d'Optique)** [FR/FR]; 147 rue de Paris, 94220 Charenton-le-Pont (FR).

(72) Inventor: **THORNHILL, David**; Essilor of America, 13555 North Stemmons Freeway, Dallas, Texas 75234 (US).

(74) Agent: **CHAUVIN, Vincent**; CORALIS, 14-16 rue Ballu, 75009 Paris (FR).

(81) Designated States *(unless otherwise indicated, for every kind of national protection available)*: AE, AG, AL, AM, AO, AT, AU, AZ, BA, BB, BG, BH, BN, BR, BW, BY, BZ, CA, CH, CL, CN, CO, CR, CU, CZ, DE, DK, DM, DO, DZ, EC, EE, EG, ES, FI, GB, GD, GE, GH, GM, GT, HN, HR, HU, ID, IL, IN, IR, IS, JP, KE, KG, KN, KP, KR, KZ, LA, LC, LK, LR, LS, LU, LY, MA, MD, ME, MG, MK, MN, MW, MX, MY, MZ, NA, NG, NI, NO, NZ, OM, PA, PE, PG, PH, PL, PT, QA, RO, RS, RU, RW, SA, SC, SD, SE, SG, SK, SL, SM, ST, SV, SY, TH, TJ, TM, TN, TR, TT, TZ, UA, UG, US, UZ, VC, VN, ZA, ZM, ZW.

(84) Designated States *(unless otherwise indicated, for every kind of regional protection available)*: ARIPO (BW, GH, GM, KE, LR, LS, MW, MZ, NA, RW, SD, SL, ST, SZ, TZ, UG, ZM, ZW), Eurasian (AM, AZ, BY, KG, KZ, RU, TJ, TM), European (AL, AT, BE, BG, CH, CY, CZ, DE, DK, EE, ES, FI, FR, GB, GR, HR, HU, IE, IS, IT, LT, LU, LV, MC, MK, MT, NL, NO, PL, PT, RO, RS, SE, SI, SK, SM, TR), OAPI (BF, BJ, CF, CG, CI, CM, GA, GN, GQ, GW, KM, ML, MR, NE, SN, TD, TG).

Published:

— *with international search report (Art. 21(3))*

(54) Title: SYSTEMS AND METHODS WITH IMPROVED THERMAL EVAPORATION OF OPTICAL COATINGS ONTO OPHTHALMIC LENS SUBSTRATES

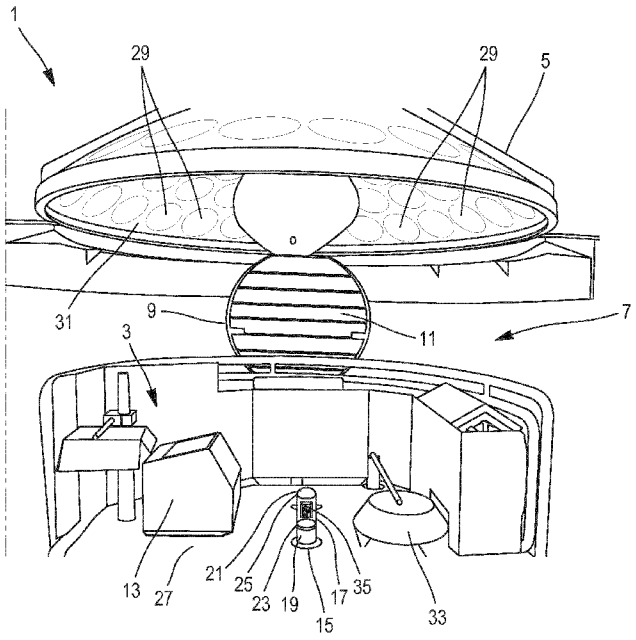

FIG. 1

(57) Abstract: Systems and methods are presented for depositing an optical coating on an ophthalmic lens substrate using at least one thermal evaporator and an ion generator. The at least one thermal evaporator is operable to resistively heat a mass-source container using an electrical current. A mass source within the mass-source container absorbs this heat, thereby producing a mass flux within a chamber. The ion generator is operable to introduce a gas source in the chamber, thereby establishing a processing environment that interacts with the mass flux. The mass flux traverses an interior of the chamber to form the optical coating on the ophthalmic lens substrate. A sequence of optical coatings may be deposited by altering between processing environments, altering between thermal evaporators, or both. Other systems and methods are presented.

WO 2016/107689 A1

SYSTEMS AND METHODS WITH IMPROVED THERMAL EVAPORATION OF OPTICAL COATINGS ONTO OPHTHALMIC LENS SUBSTRATES

TECHNICAL FIELD

[0001] The present disclosure relates generally to the vapor deposition of coatings onto substrates, and more particularly, to systems and methods with improved thermal evaporation of optical coatings onto ophthalmic lens substrates.

BACKGROUND

[0002] An ophthalmic lens enhances vision of a wearer's eye by utilizing a transparent substrate formed into a predetermined shape. The predetermined shape is selected to manipulate light passing through the transparent substrate so that one or more deficiencies of a light-receiving eye is overcome. The transparent substrate, however, is often modified by optical coatings on one or more surfaces of the predetermined shape. These optical coatings provide functionality to the ophthalmic lens including anti-reflection, wavelength filtering, polarization, brightness attenuation, and scratch-resistance. Other functionalities are possible.

[0003] Conventional systems and methods to form optical coatings on ophthalmic lens substrates include depositing such coatings from physical vapors generated by electron beams.

BRIEF DESCRIPTION OF THE DRAWINGS

[0004] Illustrative embodiments of the present disclosure are described in detail below with reference to the attached drawing figures, which are incorporated by reference herein.

[0005] FIG. 1 is a perspective view of a portion of a system for depositing an optical coating on an ophthalmic lens substrate, according to an illustrative embodiment; and

[0006] FIG. 2 is a flow chart of an illustrative method for depositing a sequence of optical coatings on an ophthalmic lens substrate.

[0007] The figures described above are only exemplary and their illustration is not intended to assert or imply any limitation with regard to the environment, architecture, design, configuration, method, or process in which different embodiments may be implemented.

DETAILED DESCRIPTION OF THE ILLUSTRATIVE EMBODIMENTS

[0008] In the following detailed description of the illustrative embodiments, reference is made to the accompanying drawings that form a part hereof. These embodiments are described in sufficient detail to enable those skilled in the art to practice the invention, and it is understood that other embodiments may be utilized and that logical structural, mechanical, electrical, and chemical changes may be made without departing from the scope of the invention. To avoid detail not necessary to enable those skilled in the art to practice the

embodiments described herein, the description may omit certain information known to those skilled in the art. The following detailed description is, therefore, not to be taken in a limiting sense, and the scope of the illustrative embodiments is defined only by the appended claims.

[0009] In the drawings and description that follow, like parts are typically marked throughout the specification and drawings with the same reference numerals or coordinated numerals. The drawing figures are not necessarily to scale. Certain features of the illustrative embodiments may be shown exaggerated in scale or in somewhat schematic form and some details of conventional elements may not be shown in the interest of clarity and conciseness.

[0010] Conventional methods to deposit optical coatings on ophthalmic lens substrates often involve using a vacuum chamber equipped with an electron beam (e-beam) gun. In such methods, the electron beam gun emits free electrons within the vacuum chamber using a filament. These free electrons are guided by a magnetic field into a crucible containing a solid precursor. Energy associated with the free electrons is absorbed by the solid precursor, producing an impact region that experiences a rapid rise in temperature. As a result, a portion of the solid precursor either liquefies or sublimes, liberating vapor into the vacuum chamber. This vapor serves as a mass flux that is received by one or more ophthalmic lens substrates within the vacuum chamber. The mass flux accumulates on the one or more ophthalmic lens substrates, forming optical coatings via condensation.

[0011] Electron beam guns, however, are relatively complex and increase the operating, maintenance, and training costs of their associated vapor deposition systems. For example, the filament of the e-beam gun must be coupled to a power supply that can precisely regulate an applied current and voltage. Such precise regulation is necessary to ensure a stable, ripple-free stream of free electrons that exhibits a tight beam spot and no arcing. Without this high-quality electron beam, a poor quality optical coating often results. Moreover, the filament may experience premature failure, increasing equipment downtime and maintenance. It will be appreciated that the power supply requires expensive electronics to precisely regulate the applied current and voltage. Advanced expertise is also necessary to operate the power supply. As another example, a rate monitoring component (e.g., a quartz crystal monitor) is commonly required with electron beam guns to determine thicknesses of optical coatings during deposition. Feedback from the rate monitoring component is used to regulate the electron beam, ensuring that the deposited optical coatings achieve their target thicknesses.

[0012] In another example, a water chiller unit is also often employed to cool a hearth that secures the crucible during deposition. Cooling prevents the hearth, typically formed out of copper, from softening or melting during operation of the electron beam gun.

[0013] The embodiments described herein relate to systems and methods for depositing an optical coating on an ophthalmic lens substrate using at least one thermal evaporator and an

ion generator. The at least one thermal evaporator provides a simpler means to generate mass fluxes for optical coatings than the electron beam gun. The at least one thermal evaporator is secured within a chamber configured to contain a vacuum environment. The at least one thermal evaporator is operable to resistively heat a mass-source container using an electrical current. A mass source within the mass-source container absorbs this heat, thereby producing a mass flux within the chamber. The mass flux traverses an interior of the chamber to form the optical coating on the ophthalmic lens substrate.

[0014] The ion generator is coupled to a chamber and is operable to introduce a gas source therein, thereby establishing a processing environment. If inactive, the ion generator allows the gas source to enter the chamber unaffected. In another embodiment, a method for introducing a gas source into the chamber may include the use of an additional gas flow controller such as a control flow valve mounted to the chamber that is separate from the ion generator source. As described below, the ion generator can be positioned such that upon introduction of a gas source into the chamber, the gas source is directed toward the lens substrates so that the ions and gas become intermixed with the mass flux from the thermal source. The ion generator can also be positioned such that it faces toward the lens substrates if it is to be used for other purposes to pre-treat the lenses before deposition steps.

[0015] If active, the ion generator introduces the gas source as a plasma. The gas source, whether unaffected or as the plasma, interacts with the mass flux during transit and may interact with the optical coating during formation on the ophthalmic lens substrate. A sequence of optical coatings may be deposited by altering between processing environments, altering between thermal evaporators, or both. The rate of deposition and the thickness of the coatings can be controlled by using a predetermined power source or deposition time. In contrast to the standard e-beam system, this process described herein does not require a rate monitoring system in addition to the thermal source, but it may have a monitoring system, if desired. This can reduce the time and cost associated with this process because it is not dependent on having a rate monitoring system. Other systems and methods are presented.

[0016] It will be understood that the systems and methods described herein may be used to fabricate a predetermined sequence of optical coatings that adds specific functionality to the ophthalmic lens substrate. For example, and without limitation, alternating layers of high refractive index materials and low refractive index materials may be deposited on one or more surfaces of the ophthalmic lens substrate to confer anti-reflective functionality. Other functionalities are possible such as scratch-resistance, wavelength filtering, polarization, and brightness attenuation.

[0017] Unless otherwise specified, any use of any form of the terms “connect,” “engage,” “couple,” “attach,” or any other term describing an interaction between elements is not

meant to limit the interaction to direct interaction between the elements and may also include indirect interaction between the elements described. In the following discussion and in the claims, the terms "including" and "comprising" are used in an open-ended fashion, and thus should be interpreted to mean "including, but not limited to." Unless otherwise indicated, as used throughout this document, "or" does not require mutual exclusivity.

[0018] Terms such as "first," "second," "third," etc. may be assigned arbitrarily and are merely intended to differentiate between two or more components, parts, or steps that are otherwise similar or corresponding in nature, structure, function, or action. For example, the words "first" and "second" serve no other purpose and are not part of the name or description of the following name or descriptive terms. The mere use of the term "first" does not require that there be any "second" similar or corresponding component, part, or step. Similarly, the mere use of the word "second" does not require that there be any "first" or "third" similar or corresponding component, part, or step. Further, it is to be understood that the mere use of the term "first" does not require that the element or step be the very first in any sequence, but merely that it is at least one of the elements or steps. Similarly, the mere use of the terms "first" and "second" does not necessarily require any sequence. Accordingly, the mere use of such terms does not exclude intervening elements or steps between the "first" and "second" elements or steps, etc.

[0019] Whenever a numerical range with a lower limit and an upper limit is disclosed, any number or combination of numbers falling within the numerical range, including the limits themselves, are intended as specifically disclosed. For example, and without limitation, the terms "from *a* to *b*", "from about *a* to about *b*", "from about *a* to *b*", and any similar expressions – where *a* and *b* represent numerical values of, respectively, the lower limit and upper limit – are understood to set forth every number or combination of numbers encompassed within the broader range of values, including the values *a* and *b* themselves.

[0020] As referenced herein, the term "vacuum environment" refers to any reduced pressure below atmospheric pressure, i.e., below approximately 760 torr. Such reduced pressure includes "low" vacuums from approximately 25 – 760 torr, "medium" vacuums from approximately 10^{-3} to 25 torr, "high" vacuums from approximately 10^{-3} – 10^{-9} torr, and "ultra high" vacuums from approximately 10^{-9} – 10^{-12} torr. Reduced pressures less than 10^{-12} torr are also possible (e.g., "extreme ultra high" vacuum). It will be appreciated that other pressure scales may be used to quantify the term "vacuum environment" (e.g., microns, mm Hg, atm, kPa, etc.). In these pressure scales, the term "vacuum environment" refers to any reduced pressure below a value corresponding to atmospheric pressure (e.g., below approximately 760,000 microns, 760 mm Hg, 1 atm, 101.4 kPa, etc.).

[0021] As referenced herein, the term "ophthalmic lens substrate" refers to any organic or inorganic substrate having transparency in at least the visible wavelength range of light. The "ophthalmic lens substrate" may have one or more preexisting topological features to manipulate light reflecting therefrom or passing therethrough, including optical coatings on one or more surfaces of the "ophthalmic lens substrate."

[0022] Referring now to the drawings and primarily to FIG. 1, a perspective view is presented of a portion of a system 1 for depositing an optical coating on an ophthalmic lens substrate, according to an illustrative embodiment. The system 1 includes a chamber 7 configured to contain a vacuum environment. The chamber 7 may have one or more ports, flanges, connectors, fittings, or other mating structures for coupling to one or more corresponding components. Such couplings form a sealed interface capable of supporting the vacuum environment (e.g., compression of an elastomeric O-ring or a copper gasket). Non-limiting examples of components that may be coupled to the chamber 7 include windows, covers, doors, gates, valves, hoses, electrical feedthroughs, fluid feedthroughs, thermocouples, vacuum gauges, liquid cooling subsystems, gas delivery subsystems, motion control assemblies, and analytical instruments. Other components are possible. In FIG. 1, the chamber 7 is depicted as having a hemispherical dome 5. It is noted that while the hemispherical dome 5 is generally described as hemispherical, the hemispherical dome 5 may alternatively be conical or frustoconical. The hemispherical dome 5 may be coupled to and decoupled from the chamber 7 to (respectively) prevent or allow access to an interior 3 of the chamber 7. This depiction, however, is not intended as limiting. The chamber 7 may have other components or features to allow access to the interior 3 (e.g., a sliding gate).

[0023] Coupled to the chamber 7 is a vacuum subsystem (not shown). The vacuum subsystem interfaces with a first wall 9 of the chamber 7 through a vacuum port 11 and is operable to establish the vacuum environment within the chamber 7. The vacuum subsystem typically includes a first-stage pump for establishing a first reduced pressure and a second-stage pump for establishing a second reduced pressure. Non-limiting examples of first-stage pumps include rotary-vane pumps, diaphragm pumps, reciprocating piston pumps, cryosorption pumps, scroll pumps, screw pumps, hook-and-claw pumps, rotary piston pumps, and roots (or rotary lobe) pumps. Non-limiting examples of second-stage pumps include diffusion pumps, turbomolecular pumps, molecular drag pumps, turbo-drag hybrid pumps, cryogenic pumps, ion pumps, and titanium sublimation pumps. The first reduced pressure is often a medium vacuum between 10^{-1} – 10^{-3} torr, and the second reduced pressure, a high vacuum less than 10^{-5} torr. Other reduced pressure ranges, however, are possible for the first reduced pressure and the second reduced pressure. The vacuum subsystem may also include a manifold for coupling the first-stage pump and the second-stage pump to the chamber 7. It will be appreciated that, in

general, the vacuum subsystem may include any combination of pumps necessary to establish the vacuum environment during operation.

[0024] The system 1 includes an ion generator 13 operable to produce a plasma from a gas source. The ion generator 13 is coupled to the chamber 7 and serves as a conduit for introducing the gas source into the chamber 7.

[0025] The ion generator 13 can be positioned such that upon introduction of the gas source into the chamber 7, the gas source is directed toward the lens substrates so that the ions and gas become intermixed with the mass flux from the thermal source. The ion generator 13 can also be positioned such that it faces toward the lens substrates if it is to be used for other purposes to pre-treat the lenses before deposition steps.

[0026] During operation of the system 1, the ion generator 13 may be active or inactive. If active, the ion generator 13 ionizes the gas source flowing therethrough, thus creating the plasma which then enters the chamber 7. If inactive, the gas source traverses the ion generator 13 unaffected, or unionized. The system 1 may therefore deposit the optical coating onto the ophthalmic lens substrate in the presence of either the plasma or the unionized gas source. The system 1 may also deposit the optical coating onto the ophthalmic lens substrate with no introduction of the gas source (i.e., presence of the vacuum environment alone).

[0027] The gas source may be comprised of an individual gas or a mixture of individual gases. For mixtures, individual gases may be received by the ion generator 13 and mixed therein, or may be received pre-mixed, such as from a storage container (e.g., a gas tank or bottle) or from a gas delivery subsystem with an integrated mixing element. In some embodiments, the gas source may be selected from a group comprising oxygen, nitrogen, argon, and mixtures thereof.

[0028] The system 1 also includes at least one thermal evaporator 15 configured to secure, in the interior 3 of the chamber 7, a mass-source container 17 and pass electrical current therethrough. The mass-source container 17 is formed of an electrically-resistive material (e.g., tungsten, molybdenum, tantalum, etc.) that produces heat when conducting electrical current. Non-limiting examples of the mass-source container 17 include boats, crucibles, baskets, boxes, baffled boxes, and ceramic-coated variants thereof (e.g., alumina-coated). Other mass-source containers are possible. FIG. 1 depicts the system 1 as having a single thermal evaporator 15. However, this depiction is for purposes of illustration only. The system 1 may have any number of thermal evaporators 15 but still remain within the scope of this disclosure.

[0029] The at least one thermal evaporator 15 typically includes a first electrical terminal 19 and a second electrical terminal 21 for contacting, respectively, a first portion 23 and a second portion 25 of the mass-source container 17. The first electrical terminal 19 and the

second electrical terminal 21 are electrically coupled to a current source (not shown), which typically resides exterior to the chamber 7. Such electrical coupling may be assisted by a feedthrough that provides a predetermined electrical path through a second wall 27 of the chamber 7. The current source is operable to apply a voltage potential between the first electrical terminal 19 and the second electrical terminal 21, thereby driving an electrical current through the mass-source container 17. The current source may be an alternating-current power supply capable of outputting high currents (e.g., 100 – 2000 A) at low voltages (e.g., 1 – 50 VAC). Direct current power supplies are also possible. The at least one thermal evaporator also commonly includes a thermal probe coupled to the mass-source container for measuring a temperature thereof (e.g., thermocouple, pyrometer, etc.).

[0030] The system 1 also includes at least one fixture 29 configured to hold the ophthalmic lens substrate. The at least one fixture 29 is positioned inside the chamber 7 at a predetermined distance and orientation relative to the at least one thermal evaporator 15. In FIG. 1, the system 1 is depicted as having a plurality of fixtures 29 arranged along an inside surface 31 of the hemispherical dome 5. Each fixture 29 is operable to hold a single ophthalmic lens substrate. This depiction, however, is not intended as limiting. Other numbers and arrangements of the at least one fixture 29 are possible. The at least one fixture 29 may also be configured to hold individually a plurality of ophthalmic lens substrates.

[0031] In some embodiments, the at least one fixture 29 is present as the plurality of fixtures 29 and the plurality of fixtures 29 rotates group-wise about a common axis. Such group-wise rotation translates the corresponding plurality of ophthalmic lens substrates within the chamber 7. For example, and without limitation, the hemispherical dome 5 of FIG. 1 may rotate about its axis of symmetry to orbitally translate the plurality of fixtures 29. In some embodiments, the at least one fixture 29 rotates about an axis of the fixture to rotate any ophthalmic lens substrates held thereto. In general, rotation may improve a uniformity of the optical coating applied to the ophthalmic lens substrate. Other benefits may be possible.

[0032] The system 1 additionally includes a control unit (not shown) having one or more processors and one or more memories. The control unit is electrically-coupled to the ion generator 13 and the at least one thermal evaporator 15. The control unit may also be electrically-coupled to other components of the system 1, if present (e.g., the vacuum subsystem, the gas delivery subsystem, etc.). The control unit is operable to control the ion generator 13 and the at least one thermal evaporator 15 to deposit the optical coating on the ophthalmic lens substrate. Other components of the system 1, if electrically coupled to the control unit, may also be controlled.

[0033] In some embodiments, the system 1 includes at least one movable shutter 33 proximate the at least one thermal evaporator 15. In other embodiments, the system 1 may

comprise at least one shutter that is used to cover an idle thermal source and at least one shutter that is used to actively deposit materials onto the lens substrates. An actuator (not explicitly shown) is coupled to the movable shutter 33. The actuator is operable to displace the movable shutter 33, thereby selectively covering or uncovering the at least one thermal evaporator 15. The actuator may be electrically coupled to the control unit for selecting a position of the movable shutter 33. It will be appreciated that, although FIG. 1 depicts the movable shutter 33 as configured to selectively cover or uncover a single thermal evaporator 15, the movable shutter 33 may be configured to cover or uncover a plurality of thermal evaporators 15. In such embodiments, the movable shutter 33 may cover or uncover individual thermal evaporators or combinations of individual thermal evaporators.

[0034] In some embodiments, the system 1 includes the mass-source container 17 and the mass source 35, as shown in FIG. 1. The mass source 35 is typically formed of solid material such as powder, granules, pellets, slugs, wire, rod, sheet, wafers, bars, plates, or disks. Other forms for the mass source 35 are possible. The mass-source container 17 is operable to support the mass source 35 and transfer heat thereto. The mass-source container 17 may also modulate a mass flux emanating from the mass source 35 during heating (e.g., via a baffle). In some embodiments, the mass source 35 is selected from a group comprising any of the following materials: aluminum oxide, titanium oxide, tantalum oxide, magnesium fluoride, and silicon oxide. In other embodiments, the mass source 35 is a silicon oxide material and the gas source is selected from a group comprising an oxygen-containing gas source or a nitrogen-containing gas source.

[0035] In some embodiments, the system 1 includes at least two thermal evaporators 15, namely, a first thermal evaporator and a second thermal evaporator. The first thermal evaporator is configured to secure, inside the chamber 7, a first mass-source container and pass electrical current therethrough. The second thermal evaporator is configured to secure, inside the chamber 7, a second mass-source container and pass electrical current therethrough. In such embodiments, the system 1 also includes the first mass-source container and a first mass source. The system 1 additionally includes the second mass-source container and a second mass source. The first mass source is selected to deposit a high refractive index coating while the second mass source is selected to deposit a low refractive index coating. The first mass source may be selected from a group comprising any one of the following materials: aluminum oxide, titanium oxide, and tantalum oxide. The second mass source may be selected from a group comprising any one of the following materials: silicon oxide and magnesium fluoride. During operation, the first mass-source container and the second mass-source container support and transfer heat to, respectively, the first mass source and the second mass source.

[0036] To prepare the system 1 to deposit the optical coating, the chamber 7 is brought to atmospheric pressure by allowing exterior gas (e.g., ambient air) to vent into the interior 3 of the chamber 7 (e.g., by opening a valve). The hemispherical dome 5 is decoupled from the chamber 7. The plurality of ophthalmic lens substrates is mounted to corresponding fixtures 29 of the plurality of fixtures 29 and the mass-source container 17 secured to the at least one thermal evaporator 15. If not already present therein, the mass source 35 is disposed into the mass-source container 17. The hemispherical dome 5 is re-coupled to the chamber 7 and the vacuum subsystem activated. Activation of the vacuum subsystem serves to remove, via the vacuum port 11, gas remaining in the interior 3. The vacuum environment is established when a reduced pressure in the chamber 7 reaches high vacuum or better (i.e., $< 10^{-3}$ torr). The vacuum subsystem typically remains active to maintain the vacuum environment within the chamber 7.

[0037] Optionally, the plurality of ophthalmic lens substrates may undergo cleaning before the optical coating is deposited. In such cleaning, the control unit activates the ion generator 13, which includes flowing a cleaning gas therethrough (e.g., argon). While traversing the ion generator 13, the cleaning gas becomes ionized and forms a cleaning plasma (e.g., an ionized argon plasma). This plasma subsequently enters the interior 3 to interact with the plurality of ophthalmic lens substrates. The cleaning plasma removes contaminants from surfaces of the ophthalmic lens substrates and may also etch such surfaces to improve adhesion of the optical coating. Other benefits may be possible. The control unit operates the ion generator 13 at parameters that are predetermined to match the ophthalmic lens substrates being cleaned (e.g., power, duration, gas flow rate, etc.). The control unit may also operate the vacuum subsystem to regulate a pressure of the cleaning plasma. To improve cleaning efficacy, the hemispherical dome 5 may be rotated to uniformly expose the plurality of ophthalmic lens substrates to the cleaning plasma. When cleaning is finished, the control unit deactivates the ion generator 13 and stops flowing the cleaning gas. The vacuum subsystem is then allowed to reestablish the vacuum environment. During the optional cleaning, the movable shutter 33 often covers the at least one thermal evaporator 15.

[0038] To deposit the optical coating, the movable shutter 33 is displaced by the actuator to cover the at least one thermal evaporator 15 (if not already displaced during the optional cleaning). The control unit activates the at least one thermal evaporator 15 to heat the mass source 35. More specifically, the control unit activates the current source to apply the voltage potential across the first electrical terminal 19 and the second electrical terminal 21. In response, the electrical current flows through the mass-source container 17 thereby generating thermal energy via resistive heating. The movable shutter 33 keeps the at least one thermal evaporator 15 covered until the mass source 35 absorbs sufficient thermal energy to reach a

target operating temperature. The target operating temperature typically corresponds to a predetermined deposition rate for the optical coating.

[0039] The electrical current of the current source is regulated by the control unit to control a rate of thermal energy generated by the mass-source container 17. Such regulation may be governed by a heating schedule for the mass source 35. For example, and without limitation, the one or more processors of the control unit may read and execute a predetermined set of instructions from the one or more memories. The predetermined set of instructions includes a first portion that represents the heating schedule. During execution of the first portion, the control unit responds to measurements from the thermal probe to ensure compliance with the heating schedule. The heating schedule typically depends on the mass source 35 and incorporates parameters such as thermal ramp rates, soak temperatures, duration at soak temperatures, and target operating temperatures. Other parameters are possible. The heating schedule may also incorporate parameters related to constraints of the mass-source container 17 (e.g., a maximum operating temperature).

[0040] The control unit also operates the ion generator 13 to establish a processing environment within the chamber 7 during deposition (i.e., by controlling the plasma, the unionized gas source, or the vacuum environment). In some deposition processes, the control unit may activate the ion generator 13 to produce the plasma. In other deposition processes, the control unit may keep the ion generator 13 inactive and flow the gas source to introduce the unionized gas into the interior 3. In further deposition processes, the control unit may keep the ion generator 13 inactive with no gas source to preserve the vacuum environment. The processing environment established during deposition depends on the optical coating and may include other considerations such as the mass source 35 (e.g., chemical composition, form, etc.). The predetermined set of instructions includes a second portion directed toward establishing the processing environment. The second portion represents an operating schedule of the ion generator 13 and incorporates parameters thereof such as anode voltage, anode current, power, duration, and gas flow rate (if applicable). Other parameters are possible. The second portion may also incorporate parameters related to pressures of the processing environment, including pressures of the plasma, the unionized gas source, or the vacuum environment.

[0041] Coating of the ophthalmic lens substrates commences when the movable shutter 33 is displaced to uncover the at least one thermal evaporator 15. Such uncovering allows the mass flux to emanate from the mass source and reach the plurality of ophthalmic lens substrates mounted on the plurality of fixtures 29. However, before this displacement of the shutter 33, rotation of the plurality of ophthalmic lens substrates may be started, i.e., via rotation of individual fixtures 29, rotation of the hemispherical dome 5, or both. Such rotation may allow

the ophthalmic lens substrates to receive the mass flux more uniformly. The processing environment, if based on the plasma or the unionized gas source, interacts with the mass flux in transit, interacts with the optical coating during formation, or both. Such interaction influences one or more properties exhibited by the optical coating (e.g., thickness, density, index of refraction, grain size, grain orientation, chemical composition, etc.). Using the predetermined set of instructions, the control unit regulates the at least one thermal evaporator 15 and the ion generator 13 during deposition to control properties of the optical coating. Coating of the ophthalmic lens substrates ceases when the movable shutter 33 is displaced to cover the at least one thermal evaporator 15, i.e., transit of the mass flux is blocked. Such covering typically occurs when the optical coating has reached a target thickness.

[0042] It will be appreciated that the system 1 may be operated to produce a plurality of optical coatings on the ophthalmic lens substrates. The plurality of optical coatings may correspond to a predetermined sequence of optical coatings, i.e., a multilayer stack, designed to provide functionality such as anti-reflection, wavelength filtering, polarization, scratch-resistance, brightness attenuation, etc. Other functionalities are possible. To enable such operation, the predetermined set of instructions is constructed so that the system 1 deposits the multilayer stack with a desired number, arrangement, composition, and thickness of individual layers at a desired deposition rate. The deposition rate and the thickness of the layers are controlled by using either the combination of a predetermined power source level and a predetermined deposition time, or the use of a rate monitoring device during the deposition process. For example, and without limitation, the predetermined set of instructions may direct the control unit to selectively activate a specific thermal evaporator 15 or a specific combination of thermal evaporators 15. The predetermined set of instructions may also instruct the control unit to establish a specific processing environment via control of (at least) the ion generator 13.

[0043] In embodiments where the mass source 35 is the silicon oxide material and the gas source is selected from the group comprising at least one of a oxygen-containing gas source and a nitrogen-containing gas source, the control unit flows either the oxygen-containing gas source or the nitrogen-containing gas source through the ion generator 13 during operation to deposit, respectively, optical coatings of silicon dioxide material and silicon oxynitride material. The control unit may set the processing environment to be either the plasma or the unionized gas source. One non-limiting example of the multilayer stack afforded by this embodiment includes an alternating sequence of silicon dioxide material and silicon oxynitride material. The silicon dioxide material forms layers of low refractive index and the silicon oxynitride material, layers of high refractive index. Such alternation between low and high refractive index enables anti-reflective functionality.

[0044] In embodiments where the system 1 includes the first thermal evaporator and the second thermal evaporator, the control unit selectively activates the first thermal evaporator and the second thermal evaporator to deposit, respectively, the high refractive index coating and the low refractive index coating onto the plurality of ophthalmic lens substrates. The control unit also coordinates the ion generator 13 and the gas source to produce a suitable processing environment for each coating. The high index of refraction coatings may be formed of aluminum oxide material, titanium oxide material, and tantalum oxide material. The low index of refraction coatings may be formed of silicon dioxide material and magnesium fluoride material. Other materials are possible for the high index of refraction coatings and low index of refraction coatings.

[0045] According to an illustrative embodiment, a method for depositing an optical coating on an ophthalmic lens substrate includes the step of introducing a gas source into a vacuum chamber to establish a predetermined pressure. The method also includes the step of thermally-evaporating at least one mass source in the vacuum chamber to produce a mass flux. Such thermal evaporation occurs by passing electrical current through a container holding the at least one mass source. The method also involves the step of receiving the mass flux on a surface of the ophthalmic lens substrate. In some embodiments, the step of introducing the gas source includes ionizing the gas source to produce a predetermined pressure of plasma in the vacuum chamber. In some embodiments, the gas source is selected from a group comprising oxygen, nitrogen, argon, and mixtures thereof. In some embodiments, the at least one mass source is selected from a group comprising any one of the materials: aluminum oxide, titanium oxide, tantalum oxide, magnesium fluoride, and silicon oxide.

[0046] In some embodiments, the method further includes the step of repeating the steps of introducing the gas source, thermally-evaporating the at least one mass source, and receiving the mass flux to produce an alternating sequence of high refractive index and low refractive index coatings. In further embodiments, the at least one mass source includes a silicon oxide material and the step of repeating alternates between an oxygen-containing gas source and a nitrogen-containing gas source. The high refractive index coatings are formed of silicon oxynitride material and the low refractive index coatings are formed of silicon dioxide material.

[0047] Now referring primarily to FIG. 2, a flow chart is presented of an illustrative method 50 for depositing a sequence of optical coatings on an ophthalmic lens substrate. The sequence of optical coatings may be predetermined to provide functionality such as anti-reflection, wavelength filtering, polarization, scratch-resistance, brightness attenuation, etc. Other functionalities are possible. The method 50 substrate includes the step 52 of introducing a gas source into a vacuum chamber to establish a predetermined pressure. The method 50

also includes the step 54 of thermally-evaporating at least one mass source in the vacuum chamber to produce a mass flux. Such thermal evaporation occurs by passing electrical current through a container holding the at least one mass source. The method 50 involves the step 56 of receiving the mass flux on a surface of the ophthalmic lens substrate. The method 50 also involves a decision, represented by interrogatory 58, of determining if the sequence of optical coatings is complete. If the sequence of optical coatings is complete, the method 50 stops. If not, the method returns to step 52 of introducing the gas source into the vacuum chamber to establish the predetermined pressure. Such return may include evacuating the vacuum chamber to a predetermined vacuum level remove gas source from a previous iteration of the method 50. It will be appreciated that each iteration of the method 50 may involve a different mass source (or combination of mass sources), a different processing environment within the vacuum chamber (i.e., plasma, unionized gas, or vacuum environment), or both.

[0048] In some embodiments, the method 50 is repeated to produce an alternating sequence of high refractive index and low refractive index coatings. In further embodiments, the at least one mass source includes a silicon oxide material and successive iterations of the method 50 alternate between an oxygen-containing gas source and a nitrogen-containing gas source. The high refractive index coatings are formed of silicon oxynitride material and the low refractive index coatings are formed of silicon dioxide material.

[0049] In some embodiments, the at least one mass source includes a first mass source and a second mass source. The first mass source is operable to produce the high refractive index coating when thermally-evaporated and the second mass source is operable to produce the low refractive index coating when thermally-evaporated. In further embodiments, the first mass source is selected from a group comprising any one of the materials: aluminum oxide, titanium oxide, and tantalum oxide. The second mass source is selected from a group comprising silicon oxide material and magnesium fluoride material.

[0050] In some embodiments, the step 52 of introducing the gas source includes ionizing the gas source to produce the predetermined pressure of plasma in the vacuum chamber. In further embodiments, the at least one mass source includes a silicon oxide material and successive iterations of the method 50 alternate between an oxygen-containing gas source and a nitrogen-containing gas source. In still further embodiments, the oxygen-containing gas source is not ionized during iterations of the method 50 to produce a plasma.

[0051] In some embodiments, the step 52 of introducing the gas source includes ionizing the gas source to produce the predetermined pressure of plasma in the vacuum chamber. In such embodiments, the at least one mass source includes a first mass source and a second mass source. The first mass source is operable to produce the high refractive index coating when thermally-evaporated. The second mass source is operable to produce the low

refractive index coating when thermally-evaporated. In further embodiments, the first mass source is selected from a group comprising aluminum oxide material, titanium oxide material, and tantalum oxide material. The second mass source is selected from a group comprising silicon oxide material and magnesium fluoride material.

[0052] Although the present invention and its advantages have been disclosed in the context of certain illustrative, non-limiting embodiments, it should be understood that various changes, substitutions, permutations, and alterations can be made without departing from the scope of the invention as defined by the appended claims. It will be appreciated that any feature that is described in connection to any one embodiment may also be applicable to any other embodiment. The high refractive index coatings may be formed of silicon oxynitride material and the low refractive index coatings may be formed of silicon dioxide material. One of skill in the art will recognize that other materials may be used for the high refractive index and low refractive index coatings.

[0053] It will be understood that the benefits and advantages described above may relate to one embodiment or may relate to several embodiments. It will further be understood that reference to "an" item refers to one or more of those items.

[0054] The steps of the methods described herein may be carried out in any suitable order or simultaneous where appropriate. Where appropriate, aspects of any of the examples described above may be combined with aspects of any of the other examples described to form further examples having comparable or different properties and addressing the same or different problems.

[0055] It will be understood that the above description of the embodiments is given by way of example only and that various modifications may be made by those skilled in the art. The above specification, examples, and data provide a complete description of the structure and use of exemplary embodiments of the invention. Although various embodiments of the invention have been described above with a certain degree of particularity, or with reference to one or more individual embodiments, those skilled in the art could make numerous alterations to the disclosed embodiments without departing from the scope of the claims. Further, the disclosed embodiments should be understood as covering at least the following examples:

Example 1. A method for depositing an optical coating on an ophthalmic lens substrate, the method comprising:

introducing a gas source into a vacuum chamber to establish a predetermined pressure;

thermally-evaporating at least one mass source in the vacuum chamber to produce a mass flux;

receiving the mass flux on a surface of the ophthalmic lens substrate; and

wherein the at least one mass source is thermally-evaporated by passing electrical current through a container holding the at least one mass source.

Example 2. The method of example 1, wherein the step of introducing the gas source comprises ionizing the gas source to produce a predetermined pressure of plasma in the vacuum chamber.

Example 3. The method of example 1 or example 2, wherein the gas source is selected from the group consisting of oxygen, nitrogen, argon, and mixtures thereof.

Example 4. The method of example 1 or example 2, wherein the at least one mass source is selected from a group comprising aluminum oxide material, titanium oxide material, tantalum oxide material, magnesium fluoride material, and silicon oxide material, and mixtures thereof.

Example 5. The method of example 1, further comprising:

repeating the steps of introducing the gas source, thermally-evaporating the at least one mass source, and receiving the mass flux to produce an alternating sequence of high refractive index and low refractive index coatings.

Example 6. The method of example 5,

wherein the at least one mass source comprises a silicon oxide material;

wherein repeating the step of introducing the gas comprises alternatingly introducing an oxygen-containing gas source and a nitrogen-containing gas source; and

wherein the high refractive index coatings are formed of silicon oxynitride material and the low refractive index coatings are formed of silicon dioxide material.

Example 7. The method of example 1,

wherein the method further comprises repeating the steps of introducing the gas source, thermally-evaporating the at least one mass source, and receiving the mass flux to produce the alternating sequence of high refractive index coating and low refractive index coating; and

wherein the at least one mass source comprises a first mass source and a second mass source, the first mass source operable to produce the high refractive index coating when thermally-evaporated, the second mass source operable to produce the low refractive index coating when thermally-evaporated.

Example 8. The method of example 7,

wherein the first mass source is selected from a group consisting of aluminum oxide material, titanium oxide material, and tantalum oxide material; and

wherein the second mass source is selected from a group consisting of silicon oxide material and magnesium fluoride material.

Example 9. The method of example 1,

wherein the step of introducing the gas source comprises ionizing the gas source to produce the predetermined pressure of plasma in the vacuum chamber; and

wherein the method further comprises repeating the steps of ionizing the gas source, thermally-evaporating the at least one mass source, and receiving the mass flux to produce the alternating sequence of high refractive index and low refractive index coatings.

Example 10. The method of example 9,

wherein the at least one mass source comprises a silicon oxide material;

wherein repeating the step of introducing the gas comprises alternatingly introducing the oxygen-containing gas source and the nitrogen-containing gas source; and

wherein the high refractive index coatings are formed of silicon oxynitride material and the low refractive index coatings are formed of silicon dioxide material.

Example 11. The method of example 1,

wherein the step of introducing the gas source comprises ionizing the gas source to produce the predetermined environment in the vacuum chamber;

wherein the method further comprises repeating the steps of ionizing the gas source, thermally-evaporating the at least one mass source, and receiving the mass flux to produce the alternating sequence of high refractive index coating and low refractive index coating; and

wherein the at least one mass source comprises a first mass source and a second mass source, the first mass source operable to produce the high refractive index coating when thermally-evaporated, the second mass source operable to produce the low refractive index coating when thermally-evaporated.

Example 12. The method of example 11,

wherein the first mass source is selected from a group consisting of aluminum oxide material, titanium oxide material, and tantalum oxide material; and

wherein the second mass source is selected from a group consisting of silicon oxide material and magnesium fluoride material.

Example 13. A system for depositing an optical coating on an ophthalmic lens substrate, the system comprising:

a chamber configured to contain a vacuum environment;

an ion generator operable to produce a plasma from a gas source;

at least one thermal evaporator configured to secure, inside the chamber, a mass-source container and to pass electrical current through the mass-source;

at least one fixture configured to hold the ophthalmic lens substrate, the at least one fixture positioned inside the chamber at a predetermined distance and orientation relative to the at least one thermal evaporator;

a control unit electrically-coupled to the ion generator and the at least one thermal evaporator, the control unit having one or more processors and one or more memories; and

wherein the control unit is operable to control the ion generator and the at least one thermal evaporator to deposit the optical coating on the ophthalmic lens substrate.

Example 14. The system of example 13, further comprising:

a movable shutter proximate the at least one thermal evaporator;

an actuator coupled to the movable shutter; and

wherein the actuator is operable to displace the movable shutter, thereby selectively covering or uncovering the at least one thermal evaporator.

Example 15. The system of example 13, wherein the gas source is selected from the group consisting of oxygen, nitrogen, argon, and mixtures thereof.

Example 16. The system of example 13, further comprising:

the mass-source container and the mass source; and

wherein the mass source is selected from the group consisting of aluminum oxide material, titanium oxide material, tantalum oxide material, magnesium fluoride material, silicon oxide material.

Example 17. The system of example 13, further comprising:

the mass-source container and the mass source;

wherein the mass source is a silicon oxide material; and

wherein the gas source is selected from a group consisting of an oxygen-containing gas source or a nitrogen-containing gas source.

Example 18. The system of example 13, wherein a number of thermal evaporators is two and the system further comprises:

a first mass-source container and a first mass source, the first mass source operable to form a high refractive index coating;

a first thermal evaporator configured to secure, inside the chamber, the first mass-source container and pass electrical current therethrough;

a second mass source and a second mass-source container, the second mass source operable to form a low refractive index coating; and

a second thermal evaporator configured to secure, inside the chamber, the second mass-source container and pass electrical current therethrough.

Example 19. The system of example 18, wherein the first mass source is selected from the group consisting of aluminum oxide material, titanium oxide material, and tantalum oxide material and wherein the second mass source is selected from the group consisting of silicon oxide material and magnesium fluoride material.

Example 20. The system of example 18, further comprising:

a movable shutter proximate the first thermal evaporator and the second thermal evaporator;

an actuator coupled to the movable shutter; and

wherein the actuator is operable to displace the movable shutter, thereby selectively covering or uncovering the first thermal evaporator, the second thermal evaporator, or both.

CLAIMS

1. A method for depositing an optical coating on an ophthalmic lens substrate, the method comprising:

introducing a gas source into a vacuum chamber to establish a predetermined pressure;

thermally-evaporating at least one mass source in the vacuum chamber to produce a mass flux;

receiving the mass flux on a surface of the ophthalmic lens substrate; and

wherein the at least one mass source is thermally-evaporated by passing electrical current through a container holding the at least one mass source.

2. The method of claim 1, wherein the step of introducing the gas source comprises ionizing the gas source to produce a predetermined pressure of plasma in the vacuum chamber.

3. The method of claim 1 or claim 2, wherein the at least one mass source is selected from a group comprising aluminum oxide material, titanium oxide material, tantalum oxide material, magnesium fluoride material, and silicon oxide material, and mixtures thereof.

4. The method of claim 1, further comprising:

repeating the steps of introducing the gas source, thermally-evaporating the at least one mass source, and receiving the mass flux to produce an alternating sequence of high refractive index and low refractive index coatings.

5. The method of claim 4,

wherein the at least one mass source comprises a silicon oxide material;

wherein repeating the step of introducing the gas comprises alternatingly introducing an oxygen-containing gas source and a nitrogen-containing gas source; and

wherein the high refractive index coatings are formed of silicon oxynitride material and the low refractive index coatings are formed of silicon dioxide material.

6. The method of claim 1,

wherein the method further comprises repeating the steps of introducing the gas source, thermally-evaporating the at least one mass source, and receiving the mass flux to produce the alternating sequence of high refractive index coating and low refractive index coating; and

wherein the at least one mass source comprises a first mass source and a second mass source, the first mass source operable to produce the high refractive index coating when thermally-evaporated, the second mass source operable to produce the low refractive index coating when thermally-evaporated.

7. The method of claim 6,

wherein the first mass source is selected from a group consisting of aluminum oxide material, titanium oxide material, and tantalum oxide material; and

wherein the second mass source is selected from a group consisting of silicon oxide material and magnesium fluoride material.

8. The method of claim 1,

wherein the step of introducing the gas source comprises ionizing the gas source to produce the predetermined pressure of plasma in the vacuum chamber; and

wherein the method further comprises repeating the steps of ionizing the gas source, thermally-evaporating the at least one mass source, and receiving the mass flux to produce the alternating sequence of high refractive index and low refractive index coatings.

9. The method of claim 8,

wherein the at least one mass source comprises a silicon oxide material;

wherein repeating the step of introducing the gas comprises alternatingly introducing the oxygen-containing gas source and the nitrogen-containing gas source; and

wherein the high refractive index coatings are formed of silicon oxynitride material and the low refractive index coatings are formed of silicon dioxide material.

10. The method of claim 1,

wherein the step of introducing the gas source comprises ionizing the gas source to produce the predetermined environment in the vacuum chamber;

wherein the method further comprises repeating the steps of ionizing the gas source, thermally-evaporating the at least one mass source, and receiving the mass flux to produce the alternating sequence of high refractive index coating and low refractive index coating; and

wherein the at least one mass source comprises a first mass source and a second mass source, the first mass source operable to produce the high refractive index coating when thermally-evaporated, the second mass source operable to produce the low refractive index coating when thermally-evaporated.

11. A system for depositing an optical coating on an ophthalmic lens substrate, the system comprising:

a chamber configured to contain a vacuum environment;

an ion generator operable to produce a plasma from a gas source;

at least one thermal evaporator configured to secure, inside the chamber, a mass-source container and to pass electrical current through the mass-source;

at least one fixture configured to hold the ophthalmic lens substrate, the at least one fixture positioned inside the chamber at a predetermined distance and orientation relative to the at least one thermal evaporator;

a control unit electrically-coupled to the ion generator and the at least one thermal evaporator, the control unit having one or more processors and one or more memories; and

wherein the control unit is operable to control the ion generator and the at least one thermal evaporator to deposit the optical coating on the ophthalmic lens substrate.

12. The system of claim 11, further comprising:

the mass-source container and the mass source;

wherein the mass source is a silicon oxide material; and

wherein the gas source is selected from a group consisting of an oxygen-containing gas source or a nitrogen-containing gas source.

13. The system of claim 11, wherein a number of thermal evaporators is two and the system further comprises:

a first mass-source container and a first mass source, the first mass source operable to form a high refractive index coating;

a first thermal evaporator configured to secure, inside the chamber, the first mass-source container and pass electrical current therethrough;

a second mass source and a second mass-source container, the second mass source operable to form a low refractive index coating; and

a second thermal evaporator configured to secure, inside the chamber, the second mass-source container and pass electrical current therethrough.

14. The system of claim 13, wherein the first mass source is selected from the group consisting of aluminum oxide material, titanium oxide material, and tantalum oxide material and wherein the second mass source is selected from the group consisting of silicon oxide material and magnesium fluoride material.

15. The system of claim 13, further comprising:

a movable shutter proximate the first thermal evaporator and the second thermal evaporator;

an actuator coupled to the movable shutter; and

wherein the actuator is operable to displace the movable shutter, thereby selectively covering or uncovering the first thermal evaporator, the second thermal evaporator, or both.

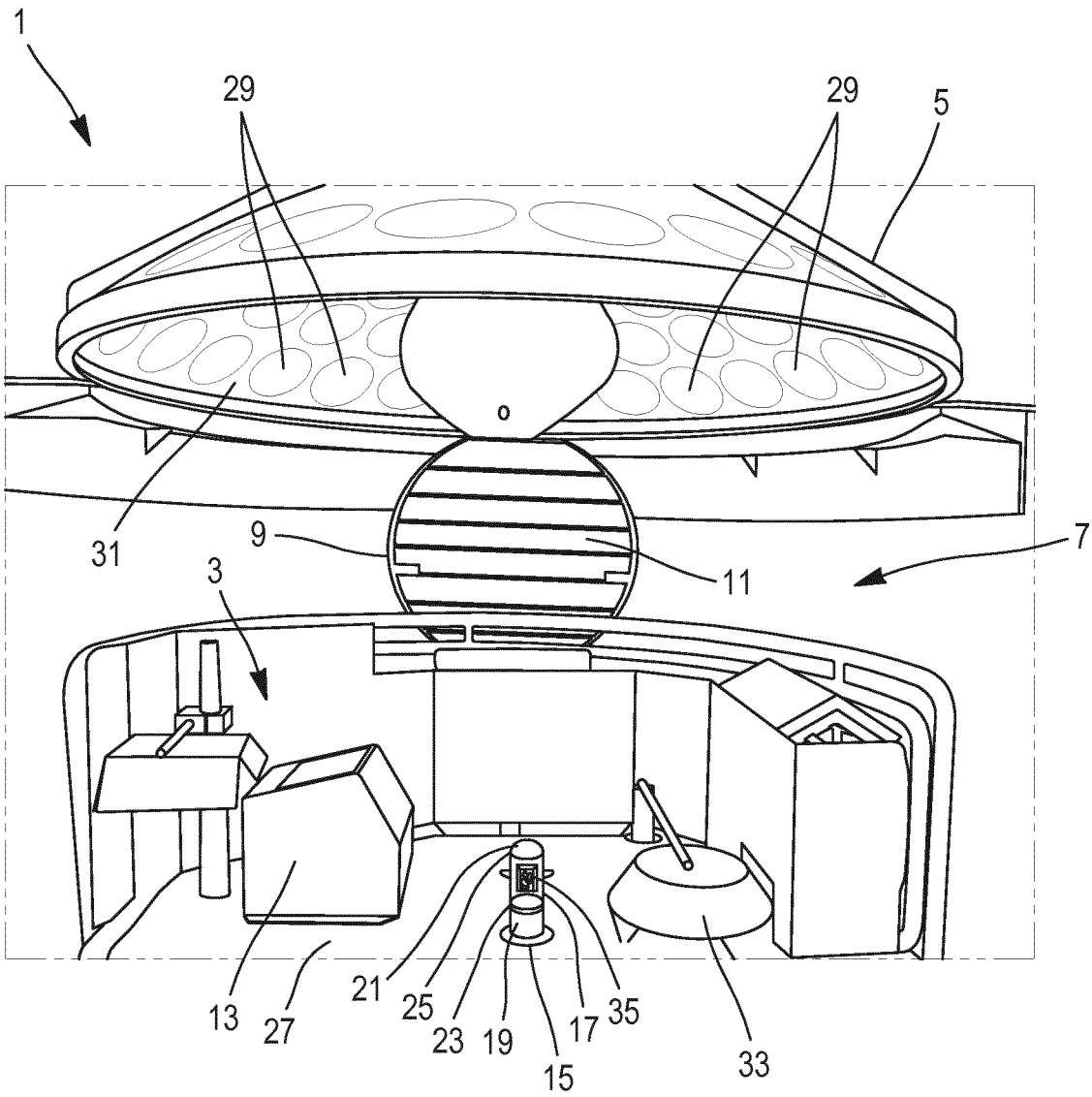

FIG. 1

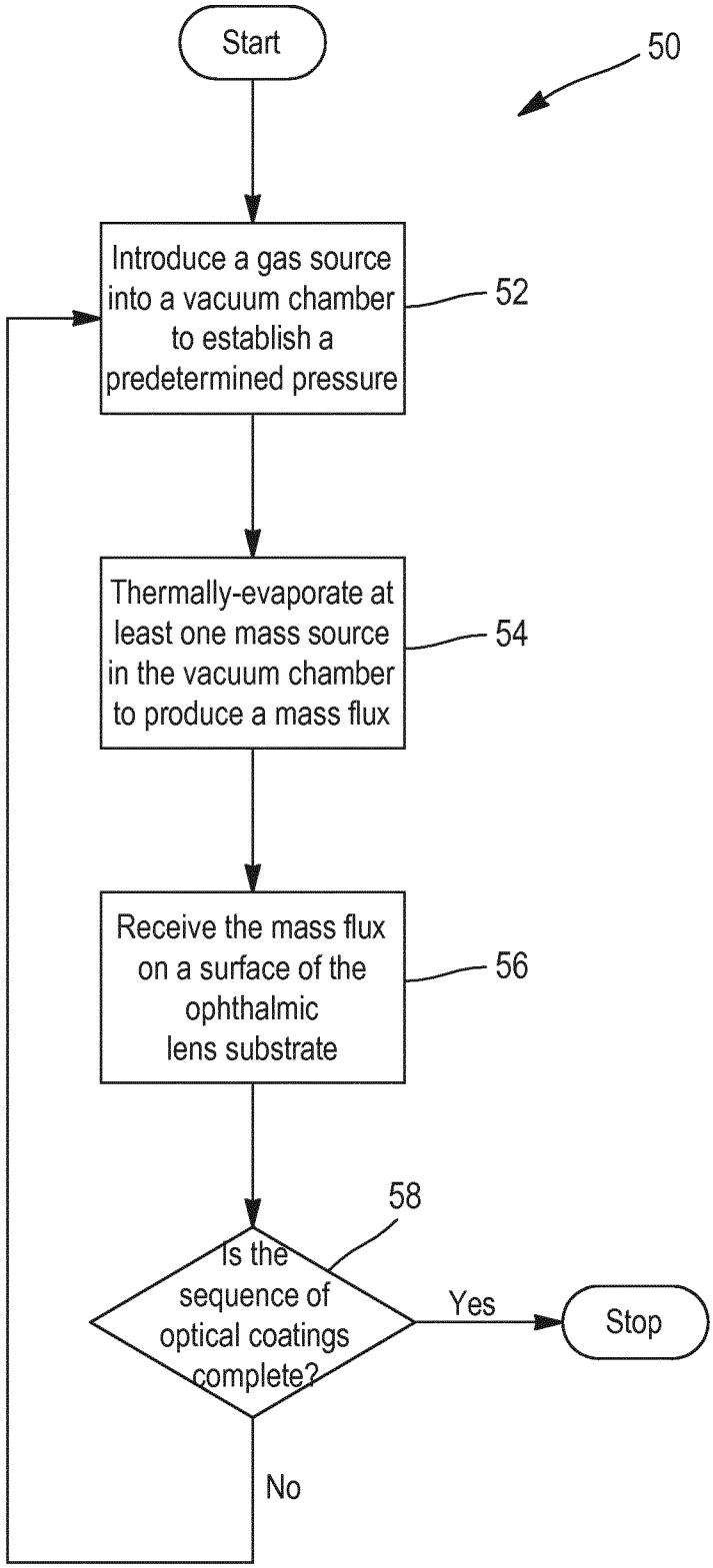
Start
50
Introduce a gas source into a vacuum chamber to establish a predetermined pressure
52
Thermally-evaporate at least one mass source in the vacuum chamber to produce a mass flux
54
Receive the mass flux on a surface of the ophthalmic lens substrate
56
58
Is the sequence of optical coatings complete?
Yes
Stop
No

FIG. 2

INTERNATIONAL SEARCH REPORT

International application No
PCT/EP2015/075338

A. CLASSIFICATION OF SUBJECT MATTER
INV. C23C14/22 B29D11/00 C03C17/22 C23C14/26 C23C14/50
C23C14/54 G02B1/00
ADD.
According to International Patent Classification (IPC) or to both national classification and IPC

B. FIELDS SEARCHED

Minimum documentation searched (classification system followed by classification symbols)
C23C B29D G02B

Documentation searched other than minimum documentation to the extent that such documents are included in the fields searched

Electronic data base consulted during the international search (name of data base and, where practicable, search terms used)
EPO-Internal, WPI Data, IBM-TDB

C. DOCUMENTS CONSIDERED TO BE RELEVANT

Category*	Citation of document, with indication, where appropriate, of the relevant passages	Relevant to claim No.
X	WO 2013/046918 A1 (SHINCRON CO LTD [JP]; SHIONO ICHIRO [JP]; HAYASHI TATSUYA [JP]; JIANG) 4 April 2013 (2013-04-04) paragraphs [0061] - [0062], [0074] - [0077], [0088]; figure 1	1-15
X	US 5 846 649 A (KNAPP BRADLEY J [US] ET AL) 8 December 1998 (1998-12-08) col. 1, l. 53-67 col. 7, l. 32-33 col. 8, l. 13-36 col. 12, l. 35-39 and 44-50; figure 1	1-15
X	US 2010/104838 A1 (NOGUCHI TAKASHI [JP] ET AL) 29 April 2010 (2010-04-29) paragraphs [0034] - [0042], [0059]; figure 2	1-4,6-8, 10-15

-/--

[X] Further documents are listed in the continuation of Box C.

[X] See patent family annex.

* Special categories of cited documents :

"A" document defining the general state of the art which is not considered to be of particular relevance

"E" earlier application or patent but published on or after the international filing date

"L" document which may throw doubts on priority claim(s) or which is cited to establish the publication date of another citation or other special reason (as specified)

"O" document referring to an oral disclosure, use, exhibition or other means

"P" document published prior to the international filing date but later than the priority date claimed

"T" later document published after the international filing date or priority date and not in conflict with the application but cited to understand the principle or theory underlying the invention

"X" document of particular relevance; the claimed invention cannot be considered novel or cannot be considered to involve an inventive step when the document is taken alone

"Y" document of particular relevance; the claimed invention cannot be considered to involve an inventive step when the document is combined with one or more other such documents, such combination being obvious to a person skilled in the art

"&" document member of the same patent family

Date of the actual completion of the international search	Date of mailing of the international search report
15 December 2015	21/12/2015

Name and mailing address of the ISA/	Authorized officer
European Patent Office, P.B. 5818 Patentlaan 2 NL - 2280 HV Rijswijk Tel. (+31-70) 340-2040, Fax: (+31-70) 340-3016	Peijzel, Paul

INTERNATIONAL SEARCH REPORT

International application No
PCT/EP2015/075338

C(Continuation). DOCUMENTS CONSIDERED TO BE RELEVANT

Category*	Citation of document, with indication, where appropriate, of the relevant passages	Relevant to claim No.
X	US 2013/135741 A1 (LEE CHRISTOPHER MORTON [US] ET AL) 30 May 2013 (2013-05-30) paragraphs [0037], [0042], [0047], [0052], [54and59]; figure 1A -----	1-15
A	US 2008/174876 A1 (FUKUI TOMOHITO [JP] ET AL) 24 July 2008 (2008-07-24) paragraphs [0018], [0045] -----	1-15

INTERNATIONAL SEARCH REPORT

Information on patent family members

International application No
PCT/EP2015/075338

Patent document cited in search report	Publication date	Patent family member(s)	Publication date
WO 2013046918 A1	04-04-2013	CN 103140598 A	05-06-2013
		CN 103154298 A	12-06-2013
		EP 2762604 A1	06-08-2014
		HK 1181823 A1	01-08-2014
		JP 4906014 B1	28-03-2012
		JP WO2013046440 A1	26-03-2015
		KR 20130084967 A	26-07-2013
		TW 201313933 A	01-04-2013
		TW 201315826 A	16-04-2013
		US 2014205762 A1	24-07-2014
		WO 2013046440 A1	04-04-2013
		WO 2013046918 A1	04-04-2013
US 5846649 A	08-12-1998	US 5846649 A	08-12-1998
		US 6077569 A	20-06-2000
		WO 9738850 A1	23-10-1997
US 2010104838 A1	29-04-2010	CN 101726767 A	09-06-2010
		EP 2180356 A1	28-04-2010
		JP 2010102157 A	06-05-2010
		US 2010104838 A1	29-04-2010
US 2013135741 A1	30-05-2013	CN 104302589 A	21-01-2015
		EP 2785661 A2	08-10-2014
		JP 2015506895 A	05-03-2015
		KR 20140098176 A	07-08-2014
		TW 201329259 A	16-07-2013
		US 2013135741 A1	30-05-2013
		US 2014016201 A1	16-01-2014
		US 2015015959 A1	15-01-2015
		WO 2013082488 A2	06-06-2013
US 2008174876 A1	24-07-2008	EP 1950321 A1	30-07-2008
		JP 4462273 B2	12-05-2010
		JP 2008180795 A	07-08-2008
		US 2008174876 A1	24-07-2008