March 5, 1957 J. H. GORBY 2,784,395

PATIENT FALL-OUT WARNING DEVICE FOR HOSPITAL BEDS

Filed Jan. 26, 1956

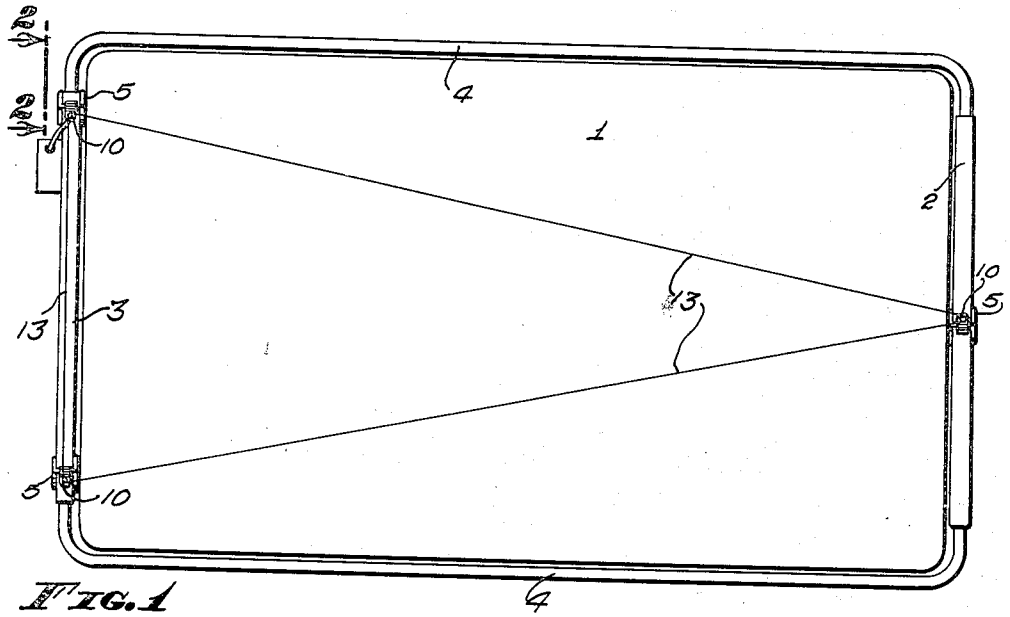

FIG. 1

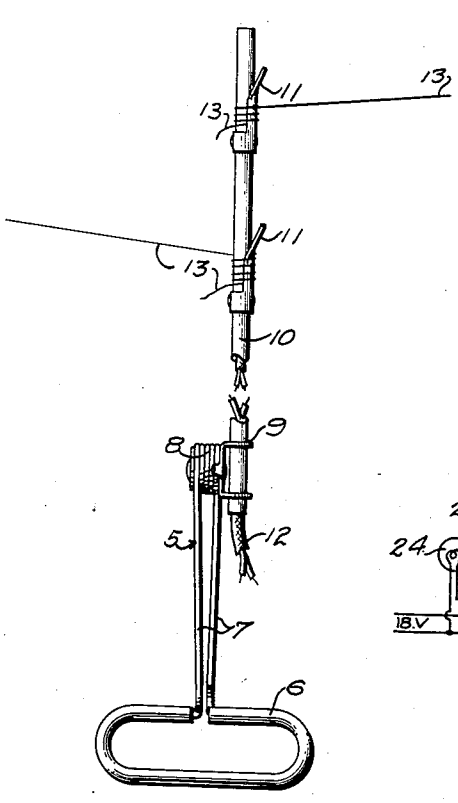

FIG. 2

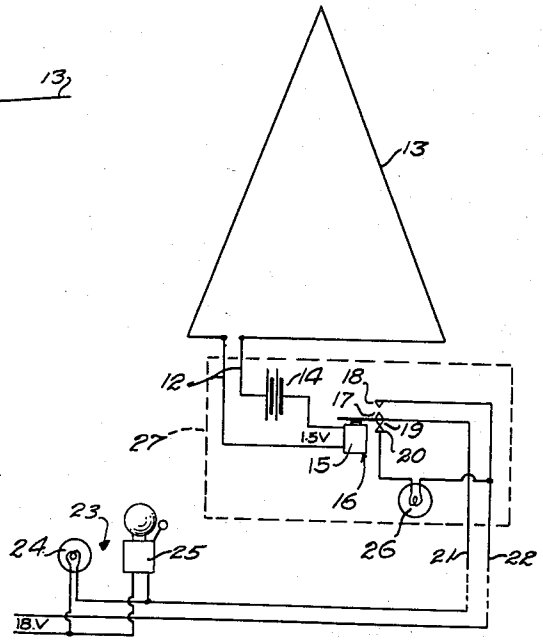

FIG. 3

INVENTOR.
JOHN H. GORBY
BY Lyon & Lyon
ATTORNEYS

United States Patent Office 2,784,395 Patented Mar. 5, 1957

2,784,395

PATIENT FALL-OUT WARNING DEVICE FOR HOSPITAL BEDS

John H. Gorby, La Mesa, Calif.

Application January 26, 1956, Serial No. 561,635

4 Claims. (Cl. 340—282)

This invention relates to patient fall-out warning device for hospital beds. Patients in a restless and delirious or semiconscious condition often attempt to get out of a hospital bed. Often side bars are provided to prevent this. However, it is not uncommon for patients, without realizing what they are doing, to climb over the side bar and fall with serious results. Included in the objects of this invention are:

First, to provide a device which is easily installed by a hospital aide and, if desired, connected to the standard hospital warning system.

Second, to provide a device of this class wherein a loop of fine easily broken wire is disposed over the bed in such position that it is broken by the patient in his movements preparatory to climbing over the side guards of the hospital bed, the wire loop being arranged in a relay holding circuit so that breaking of the holding circuit releases a relay which actuates an alarm circuit.

Third, to provide a device of this class which is particularly inexpensive of manufacture and maintenance, and which incorporates simple but effective clamp means for securing circuit wire loop relative to the head and foot of the bed.

With the above and other objects in view, as may appear hereinafter, reference is directed to the accompanying drawings in which:

Figure 1 is a substantially diagrammatical view of a hospital bed, showing the manner in which the device is installed;

Fig. 2 is an enlarged side view, taken through 2—2 of Fig. 1, showing one of the clamp members and wire supporting post; and

Fig. 3 is a wiring diagram circuit employed in the device.

A standard hospital bed 1 comprises a head 2 and foot 3. The hospital bed is equipped with side bars 4 when it is necessary to restrain a patient in the bed.

A spring clamp 5 is attached to the head 2 and a pair of similar spring clamps are clamped to the foot of the bed at opposite sides. The spring clamp 5 may comprise a pair of padded clamp loops 6 connected to spring bars 7 which are in turn joined to the ends of a coil spring 8. Fastened to the coil spring 8 is a bracket 9 in which is fitted a post 10.

Attached to one of the posts 10 is a pair of terminal clips 11 connected to lead wires 12. A fine gage, easily broken wire 13 is connected by one end to one of the terminal clips 11 and is wrapped several times around the corresponding post 10, preferably located at one end of the foot of the bed. The wire 13 is then passed around the post 10 located at the head of the bed, then around the other post located at the foot of the bed, and then secured to the other terminal clip 11.

The lead wires 12 are connected to a battery 14, which may be an ordinary flash light battery or a pair of batteries, and to the coil 15 of a low voltage relay 16. The relay 16 may be a single pole, double throw relay having a pair of contacts 17 and 18 adapted to be opened when the relay is energized, and a second pair of contacts 19 and 20 which are adapted to be closed when the relay is energized.

Leads 21 and 22 are connected to the contacts 17 and 18 and are adapted to be connected to an alarm system which may be the standard hospital alarm system, indicated fragmentarily by 23.

The hospital alarm system includes either or both a warning light 24 and warning buzzer 25, which are adapted to be operated when the contacts 17 and 18 are closed. A high resistance signal light 26 may be in series with the hospital alarm system and connected with contacts 19 and 20 so that the signal light 26 will glow to indicate that the system is operating without causing the hospital alarm system to function.

The battery 14, relay 16, and signal light 26 are all mounted in a small housing 27, which is fastened to the foot of the bed 1.

Operation of the device is as follows:

The housing 27 is mounted by suitable means, not shown, to the foot of the bed 1, and the spring clamps 5 are suitably positioned on the head and foot of the bed. The control circuit wire 13 is connected to one of the terminal clips 11, passed around the post 10 at the head of the bed, then around the second post at the foot of the bed and back to the other terminal clip, so that there is provided a wire loop, as shown in Fig. 1, disposed above the bed. When this is completed the relay 16 is energized so as to hold the hospital alarm system in an open position. For convenience, a conventional jack may be employed to permit ready connection and disconnection of the leads 21 and 22 to the hospital alarm system. If the relay is energized and functioning, the signal light 26 will be on.

Should a patient attempt to climb over the side bars 4, the patient will catch his arm or foot in the wire 13 and break it so as to deenergize the relay 16 and close the circuit through the hospital alarm system. It will be observed that the control wire 13 may be arranged in any desired manner so as to ensure its being broken by the patient's activity, preparatory to climbing from the bed. It will also be observed that installation of the wire 13 is readily accomplished so as to be placed in position when needed, or removed when no longer needed or when changing the bed, or performing other activities which might conflict with the presence of the wire 13.

It has been found satisfactory to use a No. 60 copper wire. This may be enameled wire, in which case the enamel is removed from the ends in order to make contact, or the wire may be bare wire inasmuch as the voltage carried by the wire is so low that it would not be felt or cause any injury whatsoever to the patient.

While a particular embodiment of this invention has been shown and described, it is not intended to limit the same to the exact details of the construction set forth, and it embraces such changes, modifications, and equivalents of the parts and their formation and arrangement as come within the purview of the appended claims.

I claim:

1. A patient fall-out warning device for hospital beds, comprising: a plurality of clamp means for attachment to the head and foot of a hospital bed; a post projecting from each clamp means; an easily rupturable wire looped between said posts; a holding circuit including a low voltage supply and a relay having a solenoid coil connected in series with said wire, to energize said coil when said wire is intact and deenergize said coil when said wire is broken; said relay including contacts held open when said coil is energized and closed when said coil is deenergized; and an alarm circuit connected to said contacts and caused to operate when said contacts are caused to close by breaking of said rupturable wire.

2. A patient fall-out warning device for hospital beds, comprising: a rupturable wire loop positioned above a hospital bed and so located as to be engaged by a patient in the course of attempting to escape therefrom; a holding circuit including a low voltage supply and a relay having a solenoid coil connected in series with said wire, to energize said coil when said wire is intact and deenergize said coil when said wire is broken; said relay including contacts held open when said coil is energized and closed when said coil is deenergized; and an alarm circuit connected to said contacts and caused to operate when said contacts are caused to close by breaking of said rupturable wire.

3. A patient fall-out warning device for hospital beds, comprising: a rupturable wire loop positioned above a hospital bed and so located as to be engaged by a patient in the course of attempting to escape therefrom; means for readily positioning and removing said rupturable wire loop; a holding circuit including a low voltage supply and a relay having a solenoid coil connected in series with said wire, to energize said coil when said wire is intact and deenergize said coil when said wire is broken; said relay including contacts held open when said coil is energized and closed when said coil is deenergized; and an alarm circuit connected to said contacts and caused to operate when said contacts are caused to close by breaking of said rupturable wire.

4. A patient-activity warning device, comprising: a hospital bed having a head end and a foot end projecting above the bed mattress; a pair of clamps secured to one of said ends, and at least one clamp secured to the opposite end of the bed; each of said clamps carrying an upstanding post of insulating material; an easily rupturable wire looped around said posts in the region of movement of a leg or arm of a patient attempting to leave the bed; a holding circuit including a low voltage supply and a relay having a solenoid coil connected in series with said wire, to energize said coil when said wire is intact and deenergize said coil when said wire is broken; said relay including contacts held open when said coil is energized and closed when said coil is deenergized; and an alarm circuit connected to said contacts and caused to operate when said contacts are caused to close by breaking of said rupturable wire.

References Cited in the file of this patent

UNITED STATES PATENTS

585,171	Arnold	June 28, 1897
1,758,546	Warmann	May 13, 1930
2,525,930	Mevorach	Oct. 17, 1950