United States Patent

Goldie

[15] **3,688,214**

[45] **Aug. 29, 1972**

[54] **MEANS FOR GENERATING NARROW MICROWAVE PULSES**

[72] Inventor: **Harry Goldie,** 3706 Allenswood Court, Randallstown, Md. 21133

[22] Filed: **Jan. 23, 1970**

[21] Appl. No.: **5,165**

[52] **U.S. Cl.** .....**331/75,** 307/106, 325/120, 333/7, 333/13, 343/17.1 R, 331/173

[51] **Int. Cl.**.....**H03k 5/08**

[58] **Field of Search** ....331/75, 173; 343/5 R, 17.1 R; 333/7, 13; 307/106; 325/130

[56] **References Cited**

UNITED STATES PATENTS

3,351,806	11/1967	Farber et al.	333/7 X
3,458,817	7/1969	Cooper et al.	333/13 X

OTHER PUBLICATIONS

Goldie, " A Multikilowatt X-Band Nanosecond Source" , IEEE Transactions on Microwave Theory and Techniques, Vol. MTT-15, Dec. 1967, pp. 722- 731

Primary Examiner—Ray Lake
Assistant Examiner—Siegfried H. Grimm
Attorney—F. H. Henson, E. P. Klipfel and J. L. Wiegreffe

[57] **ABSTRACT**

Described is a system for obtaining high power extremely short and narrow pulses in the neighborhood of nanoseconds, wherein the pulses are derived from longer pulses and more specifically by means of two sequential discharges in a non-resonant waveguide section. The narrow rectangular pulses are derived from a longer pulse which is caused to break down sequentially in two sections of a transmission line, each of which includes a low pressure gas acted upon by relatively intense applied fields. By adjusting the triggers for the respective gas discharges high power pulses of selectively variable width may be produced. The two low pressure arc discharges make possible the generation of extremely narrow microwave pulses without the microwave power initiating the breakdown.

11 Claims, 5 Drawing Figures

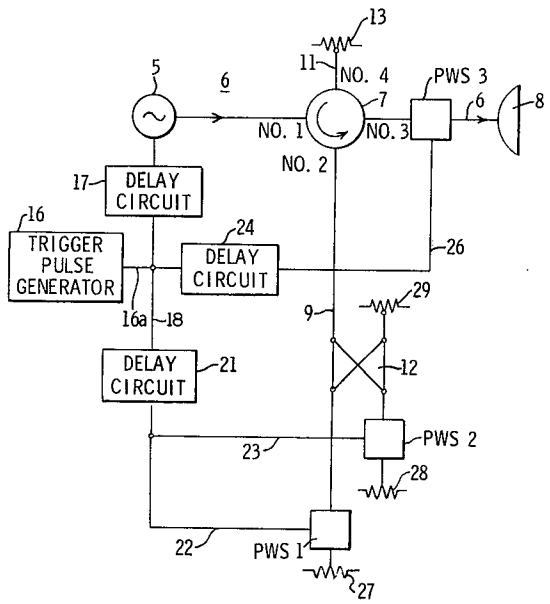

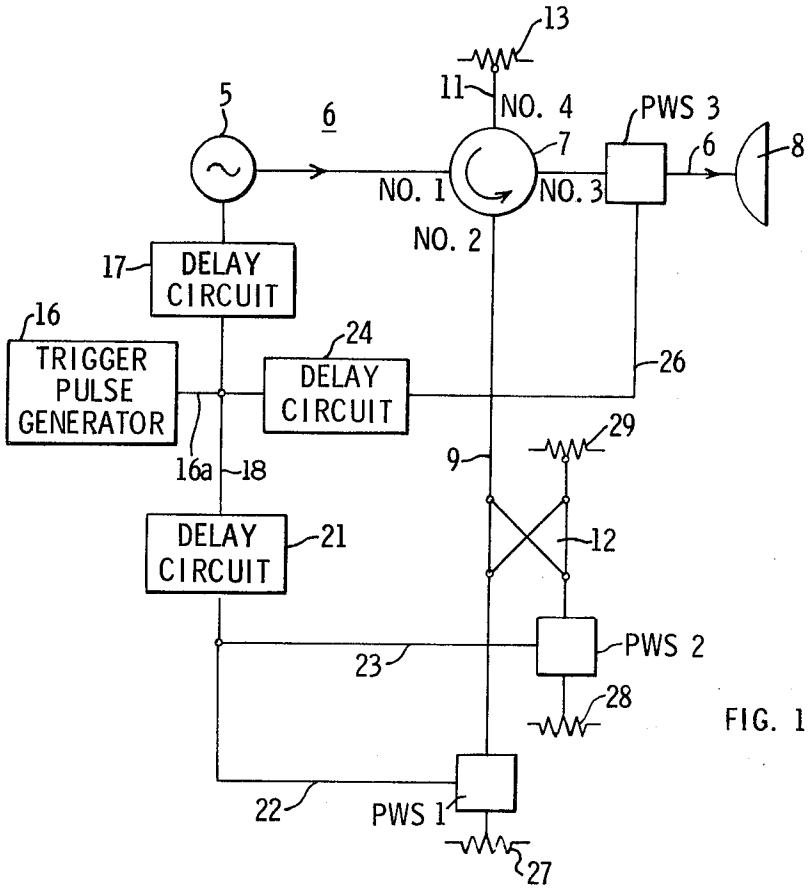

FIG. 1

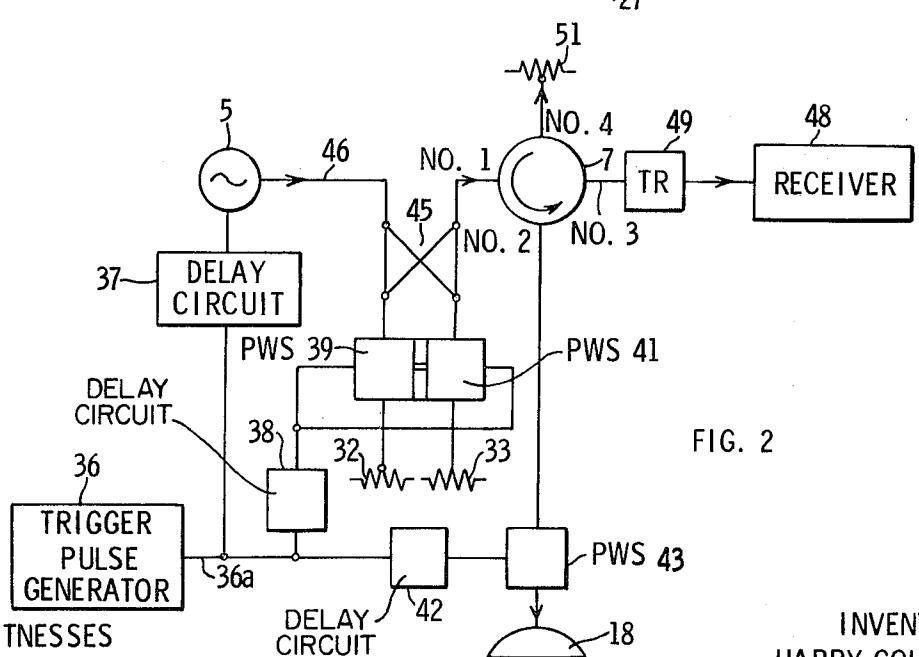

FIG. 2

WITNESSES
Helen M. Farkas
James F. Young

INVENTOR
HARRY GOLDIE
BY John P. Wiegreffe
ATTORNEY

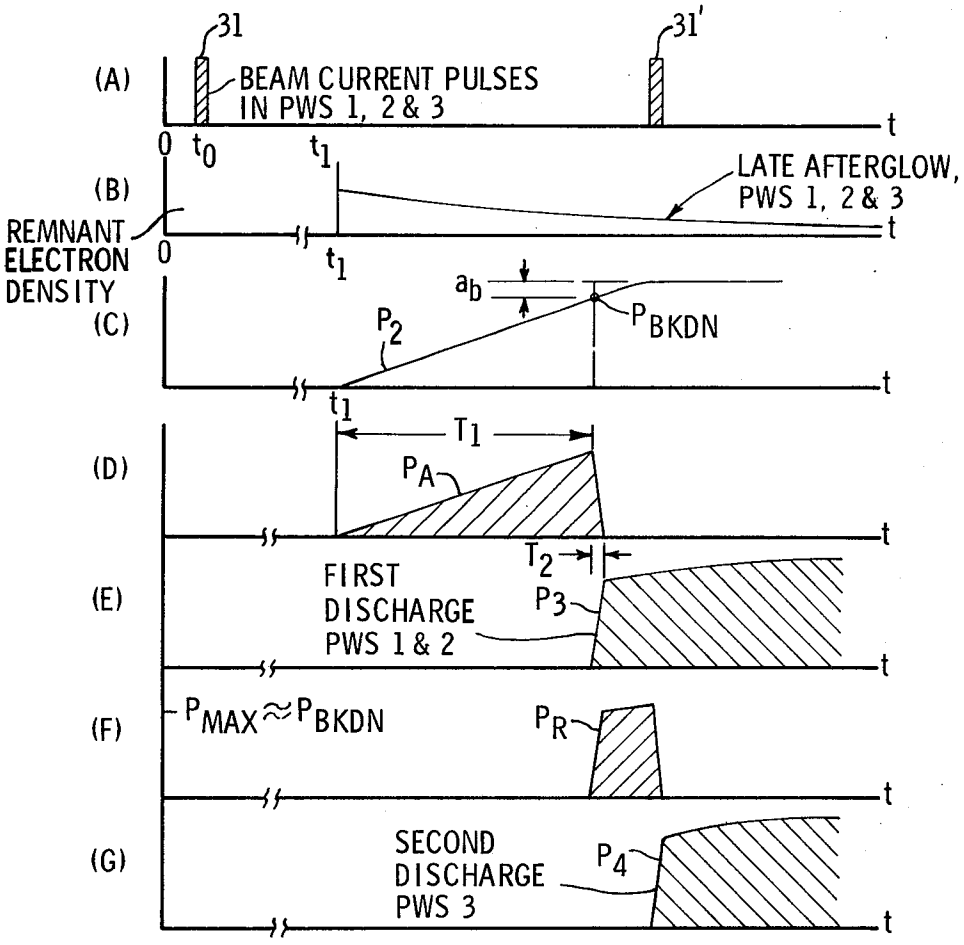
31
31'
(A)
BEAM CURRENT PULSES IN PWS 1, 2 & 3
t
0
t_0
t_1
(B)
LATE AFTERGLOW, PWS 1, 2 & 3
REMNANT ELECTRON DENSITY
0
t_1
a_b
(C)
P_2
P_{BKDN}
t_1
T_1
(D)
P_A
T_2
(E)
FIRST DISCHARGE PWS 1 & 2
P_3
(F)
$P_{MAX} \approx P_{BKDN}$
P_R
(G)
SECOND DISCHARGE PWS 3
P_4

FIG. 3

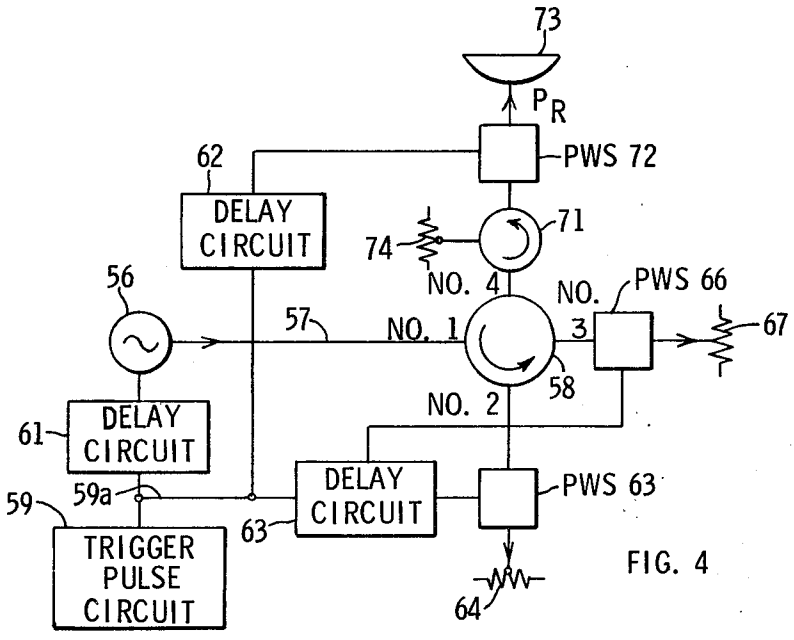
73
P_R
62
PWS 72
DELAY CIRCUIT
71
74
NO. 4
NO. 3
PWS 66
67
56
57
NO. 1
58
NO. 2
61
DELAY CIRCUIT
59
59a
TRIGGER PULSE CIRCUIT
63
DELAY CIRCUIT
PWS 63
64

FIG. 4

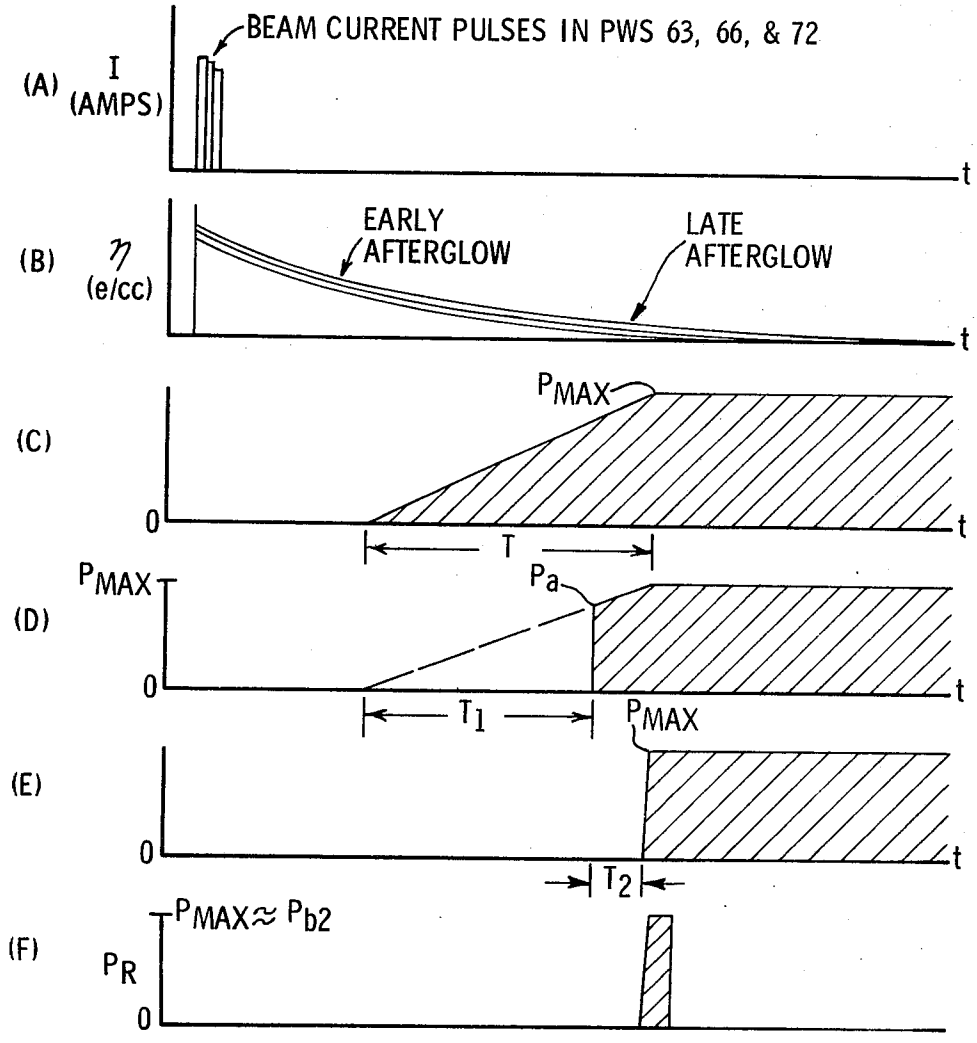

PULSE-TIME DIAGRAM

FIG. 5

MEANS FOR GENERATING NARROW MICROWAVE PULSES

BACKGROUND OF THE INVENTION

This invention relates to apparatus for generating extremely narrow high power microwave pulses. This is accomplished by deriving the leading and lagging edges of the pulses from a longer pulse. This is accomplished by selectively controlling the sequential breakdown in two respective sections of a transmission line, which sections contain a low pressure gas enclosed by a pair of windows acting only as pressure barriers. Each of the low pressure gas-filled sections are simultaneously acted upon by a relatively intense applied field.

In applicant's U.S. Pat. No. 3,323,003, there is described and claimed a thyratron waveguide switch which is an essential component of the present invention. In brief, the thyratron plasma waveguide switch, herein otherwise designated as a PWS, is an externally controlled gas-type switch for use in high speed, high power microwave applications where extremely low loss and wide bandwidths are required. The device is not RF- activated and therefore a source of triggering pulses is necessary to actuate it. The electrical characteristics are such that it is relatively insensitive to ambient temperature variations.

In the PWS switch the control electrode is a section of microwave guide which is adapted to be inserted in the usual waveguide transmission line in which it is desired to control the propagation of microwave energy. The section of microwave is sealed to the envelope that encloses the anode and cathode and the waveguide section is provided with pressure windows to complete the envelope that retains the hydrogen gas atmosphere around the electrodes.

When triggering pulses are applied between the control electrode and the cathode a plasma is generated in the region of the cathode and this causes the tube to discharge and a current arc to form between the cathode and the anode. This arc creates a high density plasma that extends across the section of the waveguide serving as the control electrode and this plasma serves as an RF barrier to provide attenuation to microwave energy.

In the previously mentioned patent a single PWS is used. In the present application two PWS switches are used, one in each of the two respective waveguide sections which are coupled to two respective arms of a circulator through which the microwave energy is transmitted to the antenna.

In IEEE Transactions on Microwave Theory and Techniques, Vol. MT–15, No. 12, Dec. 1967, on pages 722 to 730, inclusive, an article by applicant entitled, "A Multikilowatt X-Band Nanoseconds Source" describes a system which utilizes two PWS's in the two respective sealed waveguide sections connected to the arms of the circulator between the source of microwave energy and the antenna. This article describes basically a system to which the present invention is directed, namely, a system for generating very high power narrow rectangular pulses which are derived from longer pulses and utilizing the sequential breakdown in the two sections of a transmission line each of which contains a low pressure gas acted upon by relatively intense electric fields. The system described in this article is an improvement over the

system described in applicant's aforesaid patent. On the other hand, the present invention is an improvement over that system described in the published article.

SUMMARY OF THE INVENTION

The present invention is predicated upon the concept of priming a volume of low pressure gas with an electron cloud which is then allowed to cool to a Maxwellian velocity distribution close to room temperature throughout the volume, followed by an RF pulse which causes an arc breakdown simultaneously throughout the gas volume at a very fast rate to produce a very steep leading edge on the pulse. The initial cloud of electrons are formed by prefiring of the PWS's before the initiation of the microwave pulse which initiates and supplies the energy for the ensuing discharge. If the microwave conductivity is sufficiently high the transmitted pulse will rapidly fall to zero. Suitable timing circuits trigger the PWS switches and the microwave generator.

The present invention expands the basic circuitry described in the article to use an output pulse of increased amplitude without change in the pulse duration. The increase to the extent of potentially doubling of the output is obtained by the inclusion of a 3 dB power divider connected to the arm of the circulator. Since arm **1** of the circulator having incident microwave power and arm **2** sees P/2, where P is the amplitude, the power of the incident power is essentially doubled, creating breakdown and this power is reflected into the load which is the antenna.

BRIEF DESCRIPTION OF THE DRAWINGS

FIG. **1** is a schematic circuit diagram of one embodiment of the invention;

FIG. **2** is a schematic diagram of a second embodiment of the invention;

FIG. **3** is a pulse-time diagram showing the amplitude of the microwave pulses as a function of time for the steps of the operation of the embodiments of FIGS. **1** and **2**;

FIG. **4** is a schematic circuit diagram of a third embodiment of the present invention; and

FIG. **5** is a pulse-time diagram of steps of the operation of the embodiment of FIG. **4**.

DESCRIPTION OF THE PREFERRED EMBODIMENT

Briefly, the present invention derives very narrow rectangular pulses of the order of nanoseconds in length from a longer microwave pulse. This invention also shapes the pulse with very fast-rising, leading and lagging edges. This is accomplished by sequential breakdown in two sections of transmission line, each of which contains a low pressure ionizable gas acted upon by relatively intense electromagnetic waves. These sequential breakdowns occur in the transmission line between the source of electromagnetic wave energy and the antenna in the time interval during which the source is starting its buildup to a peak amplitude. By adjustment of the delay intervals applied to the trigger pulses applied to the two low pressure discharges a high power pulse of variable width varying over a very wide

range can be produced. The subject matter of this disclosure will be more readily understood after a brief discussion of operating characteristics of microwaves particularly pertinent to this invention.

The leading edge of a microwave high power pulse, when viewed on a nanosecond scale, regardless of the type of tube used as a source, appears as a ramp function whose power level rises from zero to a maximum value equal to the peak amplitude corresponding to the flat portion of the pulse, as indicated particlarly in graph *c* of FIG. 3. If this same pulse is incident on a waveguide section containing a low-pressure gas, which is enclosed by a pair of windows acting solely as pressure barriers, and if the intensity is sufficiently high, a breakdown of the gas will result. Assuming the insertion loss of a short section of line containing the gas to be negligible, then the incident and transmitted power will rise identically until the gas breaks down initiating the gas discharge. If then the microwave conductivity of the ensuing discharge is sufficiently high the transmitted pulse will rapidly fall toward zero.

Under conditions of high electron density and low collision frequency, relative to the applied signal frequency, the conductivity will be large; and the discharge acts as an effective barrier to the remainder of the incident pulse. The rising portion of the reflected pulse as well as the falling edge of the transmitted pulse will be controlled by the time required for the electron density to rise from a value corresponding to negligible RF attenuation to a value of electron density corresponding to a relatively high degree of attenuation. This situation will become readily apparent from the subsequent description, particularly in reference to the timepulse diagrams explaining the operation. It will appear from the diagrams that if the length of the ramp, that is, the time interval during which the microwave power is increasing from zero to its maximum peak value, is long compared to the time interval during which the electron density is rising sharply as a result of the gas breakdown, the rising portion of the reflected wave up to the maximum source amplitude will occur at a rate far exceeding the original rate of rise of the incident pulse. This is the basic philosophy of the present invention in which a very steep leading edge is reflected into the load (antenna) by the waveguide transmission lines. An analog to this is the electrical induction coil in which the electrical energy is stored in a magnetic field and which when collapsed by opening the energizing circuit generates a steep high voltage pulse. The apparatus of this invention is a substantial improvement over prior devices.

To proceed further with background discussion, the breakdown of a gas under the action of intense fields is defined as a transition of the electron density in the gas from some relatively low initial value to a density which is orders of magnitude greater at which a steady-state condition exists. The threshold of breakdown is taken as that value of applied field at which the rates of production and loss of electrons are equal. A slight increase of the field beyond this value will cause the electron density to increase several orders of magnitude to where a dynamic equilibrium will exist between the production and loss rates of electrons; this avalanche results in complete breakdown.

The rate of increase in the electron density is slow during the ramp function interval, mentioned previously, when the microwave amplitude is growing from zero toward its peak value relative to the decrease in the electron density when the microwave amplitude is diminishing toward its zero value. The rate of rise of the microwave amplitude as well as the rate of decay back to its zero value are functions of the magnitude of the applied field, nature and the pressure of the gas, initial density and the geometry of the area in which the gas discharge takes place.

Microwave breakdown of a low pressure gas requires an initial electron density to be present in the discharge region prior to the gas breakdown. This prevents statistical fluctuations in breakdown energy which would occur if the natural background density was not sufficiently masked. This initial density is conventionally provided either by an appropriately located DC discharge or by a radioactive source disposed in the discharge region. These priming devices create a relatively low density, in the neighborhood of 10^7 to 10^8 electrons/cm^3 whose spatial distribution is both nonuniform and highly localized relative to the field distribution in the waveguide.

With the pressure and the applied field constant for a given geometry the interval of the microwave amplitude buildup is a function of the spatial distribution of electrons, their distribution of velocities and their initial density over the volume of the waveguide where the applied field is high. Under conditions where the applied field sees: (a) an initial density sufficiently high to mask the background density, (b) uniform distribution of electrons in the center half of the waveguide, and (c) a Maxwellian distribution of electron speeds with an average temperature of a fraction of electron volt which is equivalent to an isothermal inactive plasma, optimum conditions exist for a jitter-free breakdown interval with a reproducible breakdown characteristic when operation is repeated at high PRF. If the charge density builds up uniformly over the discharge region as in a bulk interaction; the consequence is a stable and reproducible breakdown with each succeeding pulse.

With initial priming of the region with these electrons, the action of the field is to increase the charge density, first in the local region where the initial density is high, and then to depend upon diffusion gradients to initiate a volume breakdown. These diffusion gradients require a finite time to spread the electrons throughout the volume, the interval being a function of the initial distribution and instabilities in the priming sources. Therefore, the charge gradients may fluctuate with each successive breakdown, the result being in breakdown amplitude. As will appear apparent from the subsequent discussion of the specific embodiments the desired charge and distribution can be approximated by forming a sheet of electrons in the section of the transmission line and this is done in this instance by the use of triggered PWS switches.

The electron beam creates a plasma, or cloud, of electrons which is then allowed to decay. In the early afterglow the density, rate of diffusion, and temperature of electrons are high. Late in the afterglow, however, the electrons lose all trace of their ordered motion and rapidly thermalize approaching an isothermal

plasma; the electrons then decay by a combination of ambipolar and free diffusion. The electrons lose their energy faster than their density decreases. Low-pressure hydrogen plasmas decay only by diffusion and the densities being considered in connection with this invention are sufficiently high so that the diffusion is primarily ambipolar. By appropriate selection of the parameters it is calculated that the electron temperature decays orders of magnitude before the number of density decays to 37 percent of its maximum value. Therefore, for this condition the electrons cool much more rapidly than the density decays and therefore an isothermal plasma in the late afterglow is obtained.

The microwave energy applied to the low pressure gas causes a discharge in the waveguide. The breakdown of the gas is delayed so that the wave is incident on the second low pressure waveguide section during the delayed afterglow period when the conditions discussed above prevail. This will be clear from the time pulse diagrams which will further be discussed subsequently. Also the time delay between the initiation of the beam to produce the remanent density and the arrival of the microwave pulse is not critical because the remanent density late in the afterglow period is changing relatively slowly compared to the rise time of the high power source pulse which is also clearly shown in the pulse time drafts.

Accordingly, it will be seen that the remanent density provides an inactive plasma suitable to facilitate repeatable breakdown characteristics with each applied microwave pulse. In effect, conditions are favorable to the establishment of high stability for the reflected leading edge of the microwave pulse. Interpreted in terms of a repetitive output pulse, the peak output power will remain constant, the rate of rise of the reflected pulse will repeat identically, and the location in time of the initiation of breakdown will not fluctuate thus eliminating leading edge jitter.

The features discussed above will be further delineated in the subsequent description of specific embodiments of apparatus for carrying out the objectives of the present invention as reference is now made to the drawings.

Referring specifically to the drawings for the illustration of the preferred embodiments and starting with FIG. **1**, a source of microwave energy, such as microwave generator **5**, is coupled through appropriate waveguide transmission line **6** through a circulator **7** to a load in the form of an antenna **8**. The microwave generator **5** is connected to the No. **1** arm of the circulator and the No. **3** arm of the circulator is connected to the antenna. The No. **2** arm of the circulator **7** is connected to a 3 dB hydrid power divider **12** and a transmission line **11** is connected to the No. **4** arm of the circulator. The line **11** terminates in an attenuating load **13**. The power divider **12** is connected to a portion of microwave guide (not shown) which is completely isolated from the transmission line between the microwave generator and the antenna **8**. This portion of microwave guide includes two sections of microwave guide connected together with a small bleed aperture with the outer ends of these two sections closed by pressure windows. The purpose of the bleed aperture between the sections is to maintain the same pressure on both of the PWS switches. The total length of the waveguide portion is such that the switch **PWS1** is spaced one-quarter wavelength in the waveguide from the switch **PWS–2**.

As will be apparent from the following description the waveguide section including the two PWS switches shown in FIG. **1** are analogous to a power sink which receives and stores the microwave energy during the interval while the amplitude of the output from the microwave generator **5** is increasing from zero up to its peak value. With the power divider **12** the two PWS switches are connected in parallel and therefore they are capable of storing twice the amount of microwave power that can be stored if only a single PWS switch was used. Within practical limits the arm No. **2** of circulator **7** could be connected to *n* number of similar microwave sections with appropriate PWS switches in order to further enhance the peak of the short pulse output of the system. The reason for this will be clear when it is seen that both the switches **PWS–1** and **PWS–2** sees P/2 incident energy, where P is the power output from the microwave generator **5**, resulting in at least twice the incident power relative to the case where one PWS switch and no short-slot hybrid is used. Therefore, the useful power output is doubled by the inclusion of the hybrid junction feeding the two PWS switches in parallel.

It has previously been said that the PWS switches are prefired so that the plasma is in the late afterglow period at the appropriate instant of time in order to effect the enhancement of the output power pulses in the operation of the present system. To this end, trigger pulse generator **16** supplies control pulses through a delay circuit **17** to the microwave generator **5**. The same output pulses on the output terminal **16*a*** of the trigger pulse generator are also supplied over the conductor **18** to a second delay circuit **21**. The delay circuit **21** supplies output pulses simultaneously on conductors **22** and **23** to the switches **PWS–1** and **PWS–2**. This is indicated in the diagram in FIG. **3**.

A third delay circuit **24** is also connected to the output terminal **16*a*** of the trigger pulse generator and the output of this delay circuit is supplied over conductor **26** to the third switch **PWS–3**, which is in the waveguide transmission line **6** connecting the No. **3** arm of the circulator **7** and the antenna **18**.

The switch **PWS–1** controls the microwave energy, incident to and reflected from the absorbtion load **27** and likewise the switch **PWS–2** controls the microwave energy incident to and reflected from the absorptive load **28**. Any microwave energy reflected from No. **3** of the circulator will be absorbed in the absorptive load **13** connected to No. **4** arm of the circulator **7**. Also the absorptive load **29** will absorb any energy reflected from the 3 *dB* hybrid junction due to any mismatch in the transmission line.

From the previous general discussion of the present invention it is believed that it would be obvious to those skilled in the art how the invention works although it may be helpful to add some specific comments about the operation. The manner in which the narrow sharp rectangular pulses are derived from the longer pulses is illustrated in the graphs of FIG. **3**. The top graph (A) illustrates that each of the switches **PWS–1**, **PWS–2** and **PWS–3**, in response to the control pulses, puts out very narrow rectangular current pulses, indicated at **31**.

It is to be understood that the single pulse 31 in graph A, FIG. 3 may be considered to represent the current pulses in each of the PWS switches even though the pulse in PWS–3 is slightly delayed after the pulses in PWS–1 and PWS–2 which are simultaneous. The time relation between the current pulses in the switches and the long microwave pulses from generator 5 is illustrated in the other graphs of FIG. 3.

Controlled stable microwave breakdown of a low pressure gas requires an initial electron density present in the discharge space prior to the breakdown. This prevents statistical fluctuations in breakdown energy which would occur if the natural background density was not sufficiently masked. As distinguished from prior conventional means for providing the priming electrons for producing the arc discharge by a radioactive source or by a DC discharge, in accordance with the present invention the PWS switches are relied upon to produce a controlled electron density environment approaching the theoretically ideal isothermal plasma. A radioactive electron source or a DC discharge is capable of producing only a low density environment of about 10^7 to 10^8 electrons per cubic centimeter. This ideal condition is obtained when the conditions are such that the applied field is applied to the gas in an environment where (a) the initial density is sufficiently high to mask the background density, (b) the uniform distribution of electrons in the center half of the waveguide is present and (c) a Maxwellian distribution of electron speeds with an average temperature of a fraction of an electron volt. Such conditions produce a jitter-free breakdown interval with a reproducible breakdown characteristic which is capable of operating at a very high PRF.

The above is accomplished by the proper sequence of the triggering of the PWS switches and the microwave generator 5. The switches PWS–1 and PWS–2, when fired, produce a beam current pulse represented by the pulse 31 in graph (A) of FIG. 3 and may be capable of creating a plasma of approximately 10^{11} to 10^{12} electrons per centimeter.

The significant feature of the present invention over the prior art resides in the feature of relying on the late afterglow of the electron beams in the switches PWS–1 and PWS–2. The delay circuit 17 is so adjusted with respect to the output pulses delivered by the delay circuit 21 to the PWS switches so that the plasma created by the PWS switches are allowed to decay. In the early afterglow the density, rate of diffusion, and the temperature of the electrons are high. Late in the afterglow, however, the electrons lose all trace of their ordered motion and rapidly thermalize approaching an isothermal plasma since the electrons decay by a combination of ambipolar and free diffusion.

The above is graphically illustrated in FIG. 3. As previously mentioned the leading edge of a microwave pulse is a ramp function P2 as the amplitude of the microwave starts at zero and increases to its peak value. Referring specifically to graphs (A), (B) and (C) in FIG. 3 it will be noted that at some instant of time t1, spaced in time from the current pulse 31 in the PWS switches at tO, the trigger pulse from the delay circuit 17 triggers the microwave generator 5 when the remanent electron density is about half its original value at $t0$ and is decaying at the same time that the amplitude of the microwave is increasing along the ramp function illustrated in graph (C) of FIG. 3.

This microwave pulse may be of the order of a fraction of a microsecond up to a full microsecond. The long microwave pulse enters the No. 1 arm of the circulator 7 and passes out through the No. 2 arm of the circulator where it is divided between the two output arms of the power divider 12 and through the switch PWS–1 into the absorbing load 27 and through the switch PWS–2 into the absorbing load 28. It is to be understood that any reflected energy due to a mismatch in the power divider goes into the absorbing load 29. The threshold breakdown of the gas is taken as that value of applied field at which the production and loss rate of electrons are equal. This point is represented on the graph (C) at the point PBKDN. T_1 is the formative time lag from the instant that the microwave generator 5 starts to produce the pulse to the breakdown threshold.

It will be seen from the above that the microwave pulse is delayed with respect to the beam current pulse in the switches PWS–1 and PWS–2 so that the microwave pulse is incident on the low pressure waveguide section during the late afterglow when the conditions are approaching the characteristics of an isothermal plasma. The time delay between the initiation of the electron beam pulse in the PWS switches and the arrival of the microwave pulse is not critical because the remanent density late in the afterglow period is changing relatively slowly compared to the rise time of the high power source pulse. This creates a favorable condition for reflected power leading edge pulse stability. Interpreted in terms of a repetitive output pulse, the peak output power will remain constant. The rate of rise of the reflected pulse will repeat identically, and the location in time of the initiation of breakdown will not fluctuate.

A slight increase of the microwave amplitude beyond the point at which the production rate and the loss rates of electrons are equal, such as the breakdown point indicated on the graph (C) of FIG. 3, will cause the electron density to increase several orders of magnitude to where a dynamic equilibrium will exist between the production and loss rate of electrons; this avalanche results in complete breakdown. It will be apparent from the graph that the rate of increase in electron density is slow during the interval T_1 relative to the increase in electron density during the avalanche interval T_2.

If the microwave conductivity becomes very large during the avalanche interval T_2, T_2 then becomes very small compared to the ramp interval T_1 and the amplitude of the microwave pulse will fall to zero, thus marking the trailing edge and determining the microwave pulse width. It is when the collision frequency γ_c is equal to or less than the frequency of the microwave energy with conditions of high electron density that the microwave conductivity of the gaps becomes very large and the gas becomes opaque to the remaining power of the residual pulse, indicated by curve E of FIG. 3.

Both the intervals T_1 and T_2 are functions of the rate of rise of the magnitude of the incident microwave energy, the nature and pressure of the gas, the initial density and the geometry. Large electron losses can occur during the period T_1 relative to the period T_2 which must be compensated for by an increase in the

applied microwave field which results in a slight increase in the breakdown power. The dominant energy loss mechanism during the interval T_2 is elastic and in elastic collisions in the body of gas and not diffusion to the walls. The intervals T_1 and T_2 differ markedly in that losses during T_1 are affected primarily by the geometry while the losses during interval T_2 are affected by the collision frequency. The maximum energy transfer to the electron gas is a maximum when the collision frequency equals the microwave frequency.

To realize the full potential of the present invention the breakdown interval T_1 must be substantially equal to or greater than the rise time of the microwave pulse. For a constant remanent density pressure and geometry, the interval T_1 is a function of the rate of rise of the amplitude of the applied microwave field. In all of these operations it must be assumed that the collision frequency is less than the microwave frequency as this is the upper boundary for maximum reflected power.

During interval T_2 the avalanche builds up rapidly and the applied field is attenuated. Within the plasma the field is both increased and decreased simultaneously. It is increased because the wave is traversing a medium of negative permitivity and decreased as a result of power losses in the discharge and a change in wavelength. This latter effect results in a waveguide below cutoff. At the conclusion of the interval T_2 the plasma in the PWS switches reaches a state of dynamic equilibrium in which the charged density approaches values equal to or greater than 10^{11} electrons/cm^3. Whether the plasma becomes a good reflector or an absorber of microwaves, however, depends upon the ratio of the collision frequency to the microwave frequency. The maximum amplitude of the reflected power does not reach the peak value of the microwave pulse when the collision frequency is less than the microwave frequency.

One of the most important variables in the gas discharge is the pressure. It can be shown mathematically that the transfer of energy to a gas is inefficient at low pressures where the collision frequency is much less than the frequency of the field, that is, where the field makes many oscillations per electron-molecule collision. This inefficient transfer of radio frequency power to the gas is extremely useful in delaying the charge buildup and thus lengthening the time interval T_1.

There are actually two competing processes occurring in the gas discharges of the PWS switches. High remanent density tends to decrease the breakdown level and the lower pressure tends to increase the breakdown power. The latter process is dominant but the limit to which the pressure can be decreased is restricted by the dimensions of the container and the maximum ordered amplitude of electron gas. Too low a pressure under intense fields will cause electrons to be swept to the waveguide wall as in a DC discharge. If the secondary emission processes at the wall were negligible, the field required for breakdown would rapidly rise. However, if the wall is a good source of secondary emission, then the walls, not the gas, would play a dominant role in the discharge. This is undesirable from the viewpoint of stability and jitter since the secondary emission coefficient varies with the history of the surface and is not constant with time.

Returning again to the operation of the specific embodiment of FIG. **1**, when the incident energy enters the power divider **12**, the power is evenly divided into the absorptive loads **27** and **28**, and each of which action takes place as discussed so far in connection with FIG. **3**. In the graph (D) of FIG. **3** the area of the triangular pulse P_A represents the power in each of the absorptive loads **27** and **28**, respectively. When the pulse power acts on the gas in the discharge areas and the electron density builds up to the breakdown point and through the avalanche interval T_2, the ionized gas discharge becomes opaque to the remainder of the incident pulse as indicated in the cross-hatched portion of graph (E).

The energy represented by the cross-hatched area under the curve P_A in graph (D) is absorbed by the absorption loads **27** and **28**. The reflected pulses from the switches PWS–**1** and PWS–**2** is combined in the power divider **12** and enters the outer end of the NO. **2** arm of the circulator **7**. The combination of the pulses reflected by these switches is illustrated in graph (E). The combination of these pulses then circulates to the No. **3** arm of the circulator **7** and the first part is passed by the switch PWS–**3**, to form the relatively narrow pulse $P_R$as represented by the graph (F) of FIG. **3**. After breakdown of the gas in switch PWS–**3**, the remainder of pulse P_3, represented as P_4 in Graph (G), is reflected by switch PWS–**3** through arms NO. **3** and No. **4** of the circulator **7** and absorbed by absorptive load **13**.

The delay circuit **24** is so adjusted that the output pulses on conductor **16a** of the trigger pulse generator **16** trigger the switch PWS–**3** to give a beam current pulse **31'** indicated in graph (A) of FIG. **3**, similar to the pulse **31** in switches PWS–**1** and PWS–**2**. The switch PWS–**3** operates in the manner exactly like that of the switches PWS–**1** and PWS–**2** previously described. The time interval between the leading edge of pulse P_3 and the instant of breakdown of the gas in switch PWS–**3** determines the width of pulse P_R which is delivered to the antenna **8**. The remaining portion of the pulse P_4 represented in graph (G) in FIG. **3** is absorbed by the absorptive load **13** which is connected to the No. **4** arm of the circulator **7**. Thus, it is seen that from a relatively long original microwave pulse a very narrow radiated pulse P_R, graph (F) of FIG. **3**, is derived and supplied to the antenna **8**. The significant feature of this invention is the fact that the pulse width can be made very narrow and to very close tolerances.

In FIG. **2** the power dividing hybrid junction **45** is in the transmission line **46** between the microwave generator **5** and the No. **1** arm of the circulator **7**. In this embodiment, the microwave energy in the leading edges of the microwave pulses is dissipated in the two absorptive loads **32** and **33** which are connected, respectively, to switches PWS–**390** and PWS–**41** which are in turn connected to arms of the power divider **45**.

The advantage of the latter arrangement over that of the previous embodiment is that it removes the phasing constraints which reduced the instantaneous operating bandwidth.

The circulators and the microwave generators in both embodiments can be exactly identical. Furthermore, the antenna **18** may be the same as that in the previous embodiment. The trigger pulse generator **36**, the delay circuit **37** for the microwave generator **36** can

be the same as the corresponding components in the previous embodiment. Furthermore, the relation between the output trigger pulses on conductor 36a and the output pulses of the delay circuit 37 connected to the generator 5; the output trigger pulses from the delay circuit 38, which controls switches PWS–39 and PWS–41; and the output trigger pulses from the delay circuit 42, which controls the switch PWS–43, may have the same relation to each other as the corresponding ones in FIG. 1.

The advantage of the second embodiment over the previous one is its better adaptability of radar operation. In this particular embodiment please not that the No. 3 arm of the circulator 7 is connected to the receiver 48 through a suitable transmit-receiver protective device 49. The microwave power reflected from the antenna 18 fires the protecting device 49 and is reflected again to be absorbed in the absorptive load 51 which is connected to the No. 4 arm of the circulator. Another advantage of the second embodiment of FIG. 2 over that in the previous embodiment is that the switches PWS–39 and PWS–41 do not have to be spaced by a quarter wavelength and this removes the phasing constraint which reduces the instantaneous operating bandwidth.

A third embodiment of the invention is illustrated in FIG. 4. Whereas in the first two embodiments the leading edge of the microwave pulse is formed by two simultaneous gas discharges, in this embodiment the leading edge is formed by two successive discharges. It is within the contemplation of this embodiment that broadly a multiple of PWS switches may be used, that is, two or more, to form the leading edge. This embodiment is capable of making the short pulse output equal to the maximum power level of the long pulse. As in the previous embodiments the lagging edge is formed by a single PWS switch.

Referring specifically to FIG. 4, in a manner similar to that described in connection with the first embodiment, there is a microwave generator 56 connected through transmission line 57 to arm No. 1 of a circulator 58. The microwave generator is pulse-modulated by voltage pulses supplied by a trigger pulse generator 59 on output conductor 59a through a delay circuit 61. These output pulses on the conductor 59a are also supplied through a delay circuit 62 to a switch PWS–63 in a section of waveguide connecting an absorptive load 64 to the No. 2 arm of circulator 58. The output of the delay circuit 63 is also supplied to switch PWS–66 located in a waveguide section connecting the No. 3 arm of the circulator to an absorptive load 67. The No. 4 arm of the circulator 58 is connected to the No. 1 arm of an isocirculator 71, the No. 2 arm of which is connected through switch PWS–72 to antenna 73. The No.3 arm of the circulator 71 is terminated in an absorptive load 74.

The operation of the embodiment of FIG. 4 is, in principle, the same as that in the previous embodiments, except that in the present embodiment the leading edge of the pulse is formed by two or more successive thyratron plasma switch discharges. The pulse time diagram for the embodiment of FIG. 4 is given in FIG. 5.

As indicated in the pulse-time diagram of FIG. 5, all of the PWS switches are prefired so that the plasma is in the late afterglow at the instant that the long microwave pulse is initiated. This is shown in the top graphs (A), (B) and (C) of FIG. 5. Graph (C) shows the time interval T for the amplitude of the microwave to increase from zero to full amplitude, P_{max}. The incident microwave pulse P_2 from generator 56 is transmitted through the No. 1 arm into the circulator 58 and out the No. 2 arm through the switch PWS–63 into the absorptive load 64 until the net charge in the PWS–63 switch reaches the critical density required for the avalanche operation previously described. This time delay interval in reaching the critical density corresponding to the amplitude P_A is the time interval T_1 indicated in graph (D). At this point, a rapid buildup in the electron density takes place in one or two nanoseconds, indicated as formative time lag T_2, graph (E), FIG. 5, making the switch PWS–63 opaque to the remaining portion of the incident microwave pulse after maximum amplitude P_{max} is reached. The remainder of the microwave pulse indicated in graph (E) is circulated to the No. 3 arm of the circulator 58.

During the formative time lag T_2, before the discharge in the PWS–66 switch reaches its critical electron density, the leading edge of the microwave pulse is absorbed in the absorptive load 67. At the end of the period T_2, the avalanche occurs, and the remaining portion of the microwave pulse, indicated in graph (E) of FIG. 5, is transmitted to the No. 4 arm of the circulator 58.

It will be seen from the foregoing description that the operation of the system is effective to slice off the leading edge of a long microwave pulse which has not yet reached full amplitude in one or more slices and dissipates the energy of the slices in absorptive loads and supplies a sharply defined full amplitude pulse to a load such as the antenna 73. While the invention is illustrated as applied to a radar system the invention is not limited to that environment.

Furthermore, the microwave power output pulse supplied to the load, or antenna, is multiplied by two by the 3 dB short-slot hybrid power divider and the PWS switches over what it would be if only one PWS switch was used without the hybrid.

In the illustrative embodiment of the invention, an antenna is shown as being the load or device being energized by the microwave pulses. The term "utilization device" is used in the claims as a general term to cover an antenna or any other device performing a useful function in response to energization by the microwave pulses.

It will be noted from graph (E) of FIG. 5 that the microwave pulse in its full amplitude is transmitted to the circulator 71 and through the switch PWS–72 to the antenna 73. When the switch PWS–72 is fired by the delayed trigger pulse, supplied through the delay circuit 62, from the pulse generator 59 the end of the transmitted microwave pulse is marked to give the short pulse P_R, shown in curve (F) of FIG. 5, and the isocirculator 71 routes the remainder of the microwave pulse to the load absorptive 74.

I claim an my invention:

1. A microwave pulse modulation system comprising a source of microwave energy, a utilization device for receiving energy from said source, microwave transmission line means connecting said source of

microwave energy and said utilization device, means for pulse modulating said source, power dividing means connected to said transmission line means for directing microwave energy into a plurality of power absorbing means and means for abruptly reflecting the microwave energy incident upon said power absorbing means to reflect microwave energy into said transmission line means.

2. The combination as set forth in claim 1 in which said means for abruptly reflecting the microwave energy are thyratron plasma waveguide switch means for permitting only selected portions of the incident microwave pulse from said source to reach said absorbing means.

3. The combination as set forth in claim 2 plus further switch means in said microwave transmission line means for preventing all except a selected portion of the microwave pulses from reaching said utilization device.

4. The combination as set forth in claim 3 in which said further switch means is a plasma waveguide switch.

5. The combination as set forth in claim 1 in which said microwave transmission line means includes a circulator having four arms with its No. 1 arm connected to said source of microwave energy, its No. 2 arm connected to said power dividing means and its No. 3 arm connected to said utilization device.

6. The combination as set forth in claim 5 in which said No. 3 arm of said circulator is connected to said utilization device through a thyratron plasma waveguide switch.

7. The combination as set forth in claim 3, and means responsive to said pulse modulation means for triggering said microwave source at a selected time interval after the triggering of said thyratron plasma waveguide switch means.

8. The combination as set forth in claim 1 in which said transmission line means includes a circulator, having four arms, said power dividing means being connected between said source of microwave energy and said circulator.

9. The combination as set forth in claim 7, said power dividing means being connected between said source and No. 1 arm, the No. 2 arm of said circulator being connected to said utilization device and switch means in said latter arm for permitting only a selected portion of the microwave pulse to reach said utilization device.

10. The combination as set forth in claim 1 in which said transmission line means includes a circulator having four arms, the No. 1 arm being connected to said source of microwave energy, the No. 2 and No. 3 arms being connected to respective absorptive loads, and switch means in each of said No. 2 and No. 3 arms, and the No. 4 arm being connected to said utilization device.

11. The combination as set forth in claim 10 in which said No. 4 arm includes an isocirculator and a thyratron waveguide switch for permitting only a selected portion of themicrowave pulses to reach said utilization device.

* * * * *