US00D337096S

United States Patent [19]

Iino

[11] Patent Number: Des. 337,096

[45] Date of Patent: ** Jul. 6, 1993

[54] ELECTRONIC COMPUTER

[75] Inventor: **Masaaki Iino**, Yokohama, Japan

[73] Assignee: **Kabushiki Kaisha Toshiba**, Kanagawa, Japan

[**] Term: **14 Years**

[21] Appl. No.: **685,010**

[22] Filed: **Apr. 15, 1991**

[30] **Foreign Application Priority Data**

Oct. 25, 1990 [JP] Japan 2-35530

[52] **U.S. Cl.** **D14/106**

[58] **Field of Search** ..... D14/100, 101; D18/1, D18/7, 11, 12; 235/145 A, 145 R; 340/700, 706; 341/22, 23; 361/390, 394; 364/708, 709.04

[56] **References Cited**

U.S. PATENT DOCUMENTS

D. 224,784	7/1972	Sucre et al. .	
D. 254,005	1/1980	Zadock et al. .	
D. 275,102	8/1984	MacConnel	D14/106
D. 280,511	9/1985	Moggridge et al.	D14/106
D. 280,622	9/1985	Moggridge et al.	D14/100
D. 282,843	3/1986	Kurihara et al.	D14/100
D. 283,511	4/1986	Dunn	D14/106
D. 284,193	6/1986	Marshall	D14/101
D. 284,474	7/1986	Sawada	D14/100
D. 287,969	1/1987	Kusanagi	D14/106
D. 288,566	3/1987	Chin et al.	D14/106
D. 289,177	4/1987	Sawada	D18/7
D. 289,763	5/1987	Fujii et al.	D14/106
D. 290,256	6/1987	Sapper et al.	D14/106
D. 290,845	7/1987	Yubisui et al.	D14/111
D. 291,442	8/1987	Kurihara	D14/106
D. 293,677	1/1988	Hara et al.	D14/106
D. 293,678	1/1988	Sawatani et al.	D14/106
D. 294,029	2/1988	Nishiyama et al.	D14/106
D. 294,831	3/1988	Hara et al.	D14/106
D. 295,176	4/1988	Nishimoto et al.	D14/106
D. 295,519	3/1988	Kimble	D14/106
D. 299,031	12/1988	Sugano	D14/106
D. 308,861	6/1990	Tsukada et al.	D14/106
D. 310,213	8/1990	Tsukada et al.	D14/106
D. 312,822	12/1990	Watabe et al.	D14/106
D. 324,674	3/1992	Iino	D14/106

FOREIGN PATENT DOCUMENTS

100708	6/1988	China .
100709	6/1988	China .
101093	7/1988	China .
8800660	10/1988	Fed. Rep. of Germany .
47-14961	5/1972	Japan .
499866	4/1979	Japan .
639216	11/1984	Japan .
650470	5/1985	Japan .
664175	10/1985	Japan .
684172	8/1986	Japan .
684172	8/1986	Japan .
685000	8/1986	Japan .
685063	8/1986	Japan .
685121	8/1986	Japan .
685542	8/1986	Japan .
686374	9/1986	Japan .
686381	9/1986	Japan .
686386	9/1986	Japan .
686658	9/1986	Japan .
686706	9/1986	Japan .
685121	10/1986	Japan .
685000	12/1986	Japan .
695931	12/1986	Japan .
696188	1/1987	Japan .
697328	1/1987	Japan .
763838	6/1988	Japan .
747900	11/1988	Japan .
748513	11/1988	Japan .
749802	11/1988	Japan .
746985	4/1989	Japan .
746985	4/1989	Japan .
763840	6/1989	Japan .
763855	6/1989	Japan .
67297	2/1987	Rep. of Korea .
85032	10/1988	Rep. of Korea .
92859	7/1989	Rep. of Korea .
92863	7/1989	Rep. of Korea .
852546	1/1987	Sweden .
852547	1/1987	Sweden .
105573	11/1988	Taiwan .
107394	1/1989	Taiwan .

OTHER PUBLICATIONS

Sharp Advertisement May 19, 1976.
Fanuc System P-Model Jul. 27, 1983.
Moebel Interior Design Jan. 5, 1984.
The Office 98-6 Jan. 31, 1984.
Demus 645 Feb. 22, 1984.

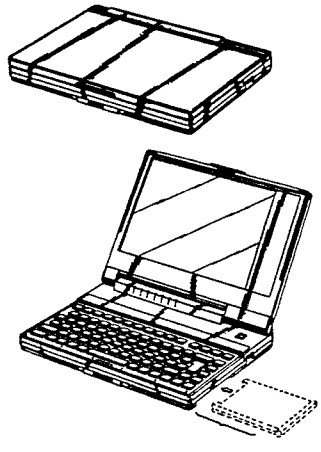

MRD Advertisement Mar. 29, 1984.
Gavilan Mobile Computer Brochure Apr. 19, 1984.
Picture #59016870 May 8, 1984.
Hewlett Packard Advertisement May 18, 1984.
Hewlett Packard Advertisement Jun. 5, 1984.
Epson HC-88 Jul. 1, 1984.
Hitachi Advertisement Sep. 4, 1984.
Hewlett Packard Advertisement Sep. 12, 1984.
Sharp PC-5000 Brochure Sep. 26, 1984.
Data General One Advertisement Sep. 28, 1984.
Apple Computer Apple IIC Oct. 15, 1984.
TI Software Journal, Pro-Lite TM Nov. 14, 1984.
IS-11c Advertisement Nov. 14, 1984.
Dulmont Magnum Article in Portable Computer Nov. 1984.
IBM Advertisement Dec. 6, 1984.
Tandy 200 1985.
General Corp. 4400 Jan. 14, 1985.
AVAL TM Advertisement Feb. 11, 1985.
Picture #J60007802 Feb. 26, 1985.
AVAL TM 20 Mar. 8, 1985.
Tandy 200 Mar. 16, 1985.
NEC Starlet PC-8401A Brochure Mar. 28, 1985.
C & D News Mar. 29, 1985.
Hewlett-Packard HP110 Apr. 1985.
Fujitsu FM 16 Apr. 17, 1985.
Fujitsu FM16 TL Brochure May 22, 1985.
Data General One Brochure May 23, 1985.
Minato Electronics MODS-5000 Aug. 22, 1985.
Toshiba T 1600 Nov. 1988.
Sanyo MBC 17LTJ Nov. 28, 1988.
Sanyo MBC 17LTJH Nov. 28, 1988.
Oki "IF 386 AX" Dec. 9, 1988.
Kyosera 386-SX Laptop AX Jan. 10, 1989.
Seiko-Epson PC-286LS Feb. 16, 1989.
NEC PC-9801 LV21 May 13, 1989.
Fujitsu G-150LT May 19, 1989.
Ricoh-Magus Feb. 1, 1990.
Mitsubishi-Maxy May 15, 1990.
Mitsubishi-Maxy Note May 15, 1990.
Visual Computer Brochure.
Gavilan Mobile Computer Brochure.
Olivetti Personal Computer M15 Brochure Undated.
Epson HC-88, HC80 Brochure Undated.
Epson PX-8 Personal Computer Brochure Undated.
Mitsubishi mp286L Laptop, Personal Computer Brochure Undated.
Grid Brochure Undated.
Dauphin Laptop Computer Brochure.
MicroDIRECT Brochure Undated.
SuperSport Brochure Undated.
Panasonic KX-D4930 Advertisement Undated.
Ampere WS-1 Advertisement Undated.
NEC Contrast Undated.
NEC Starlet PC-8401A Advertisement Undated.
Victor Technologies, V 286 P Catalog Undated.
Toshiba T 1100 Plus Jul. 22, 1985.
GridCase Brochure Sep. 24, 1985.
FBS Advertisement Sep. 30, 1985.
NEC N6919 Model 80/80H Nov. 11, 1985.
IBM Advertisement Nov. 28, 1985.
Apple Computer IIC Dec. 1985.
Hewlett-Packard Portable Plus Dec. 1985.
Fujitsu FM 16 May 21, 1986.
PC-816F Advertisement May 27, 1986.
Zenith Data Systems NEWSDATE Newsletter Jun. 7 1986.
Tandy 600 Advertisement Jul. 25, 1986.
Ricoh JP70D Brochure Sep. 29, 1986.
Data General One Brochure Oct. 3, 1986.
Article re IBM Portable Personal Computer Oct. 15, 1986.
NEC PC-98LT Advertisement Oct. 23, 1986.
Yaskawa P-150 Advertisement Nov. 12, 1986.
Yaskawa Memocon ®-SC GL20 Advertisement Mar. 27, 1987.
TI Advertisement in Telephony Apr. 1, 1987.
Data General One Model 2J Brochure May 20, 1987.
Hitachi B16LX Brochure Aug. 31, 1987.
Ricoh Brochure Sep. 17, 1987.
Sony Produce 100 Brochure Sep. 18, 1987.
Panasonic FW-U1EX Advertisement Oct. 2, 1987.
Nihon IBM 55 Model 5535 Oct. 19, 1987.
NEC Minitel 5 Advertisement Oct. 29, 1987.
Rein Laptop 300 SLC Advertisement Oct. 29, 1987.
IBM 5535/5540 Brochure Nov. 4, 1987.
NEC PC-9800 Advertisement Nov. 27, 1987.
Panasonic U1EX Advertisement Dec. 8, 1987.
Schneider Multivision 300 SLC Catalog 1988.
Panasonic U1Pro Jan. 4, 1988.
Diagnostic Products Review Jan.-Feb. 1988.

Toshiba E. & E. News Feb. 26, 1988.
Seiko-Epson PC-286L Mar. 2, 1988.
Toshiba JW90FII Rupo Brochure Mar. 3, 1988.
Hitachi B16LX Brochure Apr. 5, 1988.
Sony Produce PJ-100 EX Brochure Apr. 5, 1988.
Halikan LA22, LA30 Apr. 21, 1988.
WS Japanese Advertisement Apr. 27, 1988.
NEC Multispeed Spring '88.
Samsung S5200 May 10, 1988.
Datavue Snap 1+1 May 10, 1988.
Portable Computer Review, p. 32 May 10, 1988.
GridCase 1530 Advertisement May 10, 1988.
NEC MultiSpeed EL Model 2 Brochure May 10, 1988.
Sharp PC-5000 Brochure May 12, 1988.
Japanese Advertisement May 12, 1988.
Sanyo ES 100 May 13, 1988.
NEC PC-9801 LV 21 Brochure May 13, 1988.
Sharp WV-500 May 19, 1988.
Panafacom C-250 LT Brochure May 19, 1988.
Sony Produce 100EX Advertisement May 19, 1988.
Panasonic Panacom 6000 LT Brochure Jun. 7, 1988.
NEC Mini 5 Carryword Brochure Jun. 27, 1988.
Ricoh JP90LX Brochure Jun. 28, 1988.
NEC Mini 5 HL Brochure Jun. 30, 1988.
NEC PC-98 LT Brochure Jul. 14, 1988.
NEC PC-9801LX5C Aug. 23, 1988.
Kyosera 386AX Sep. 1988.
Sharp AX286L Sep. 29, 1988.
NEC PC 9801 LS2/LS5 Oct. 27, 1988.

Primary Examiner—Wallace R. Burke
Assistant Examiner—Freda S. Nunn
Attorney, Agent, or Firm—Banner, Birch, McKie & Beckett

[57] **CLAIM**

The ornamental design for an electronic computer, as shown and described.

DESCRIPTION

FIG. **1** is a top front and right side perspective view of an electronic computer showing my new design;
FIG. **2** is a front elevational view thereof;
FIG. **3** is a left side elevational view thereof;
FIG. **4** is a top plan view thereof;
FIG. **5** is a rear elevational view thereof;
FIG. **6** is a bottom plan view thereof;
FIG. **7** is a right side elevational view thereof in closed position;
FIG. **8** is a top front and right side perspective view thereof in closed position; and,
FIG. **9** is a top front and right side perspective view thereof wherein a memory card is separated from the aperture and shown in broken lines for illustrative purposes only and forms no part of the claimed design.

FIG.1

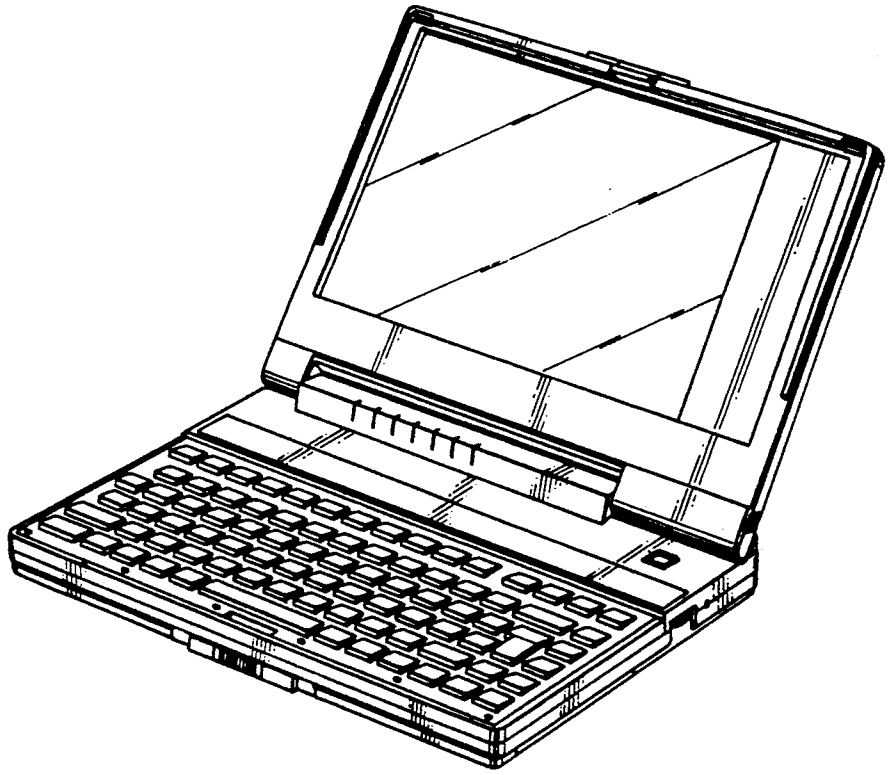

FIG.2

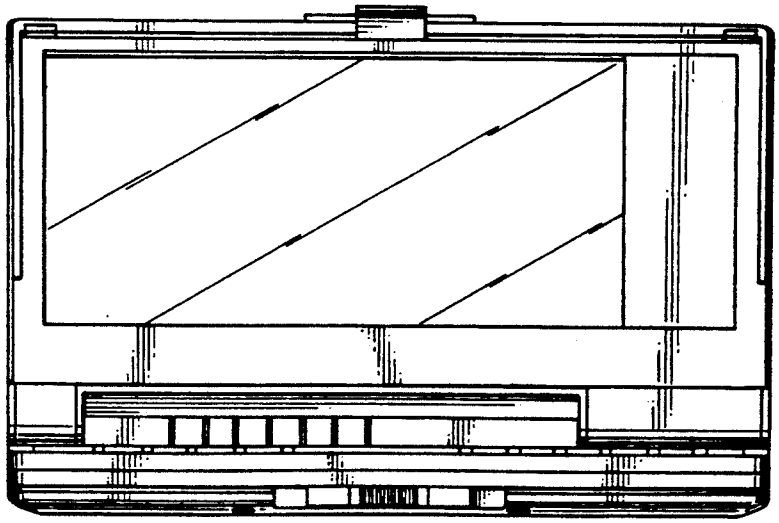

FIG.3

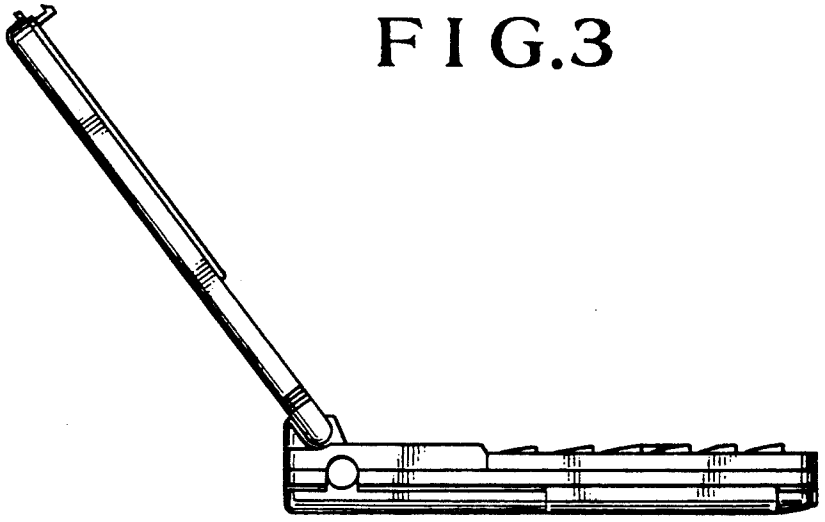

FIG.4

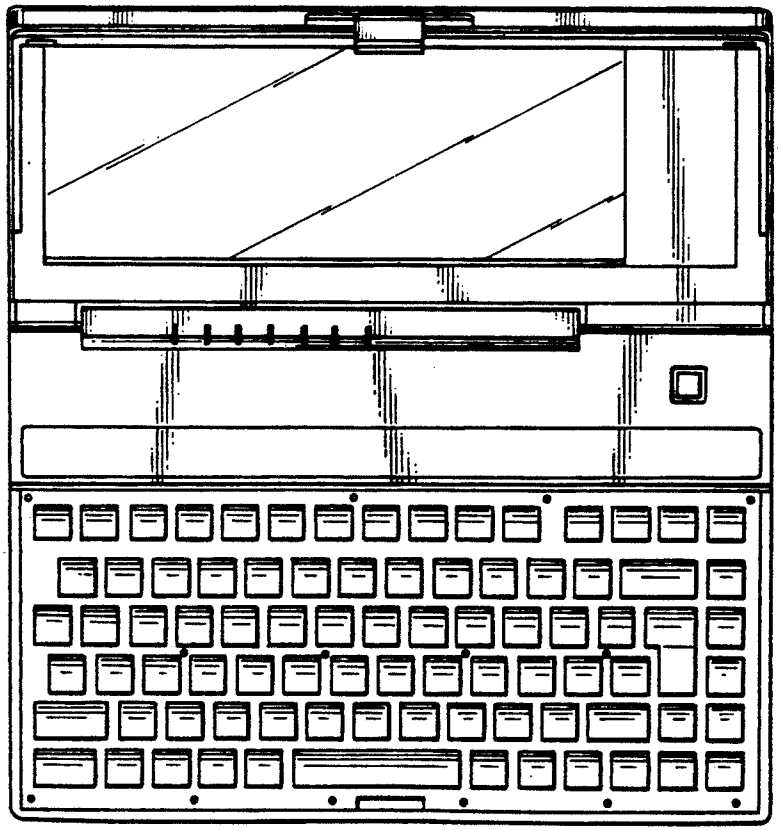

FIG.5

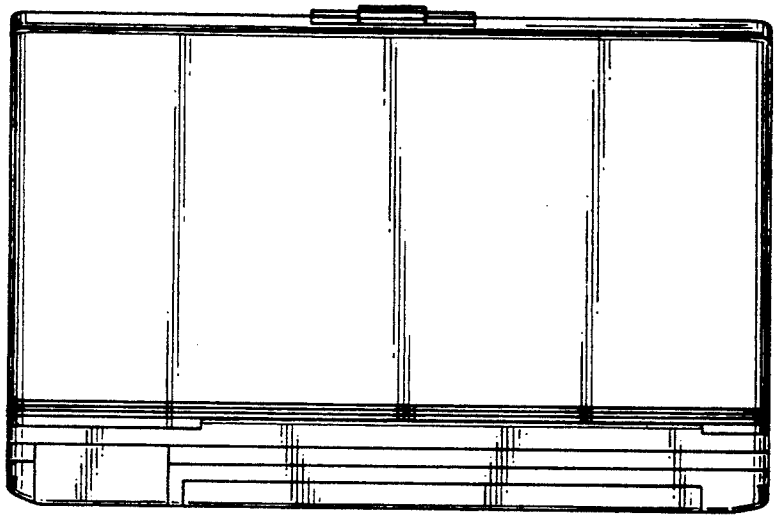

FIG.6

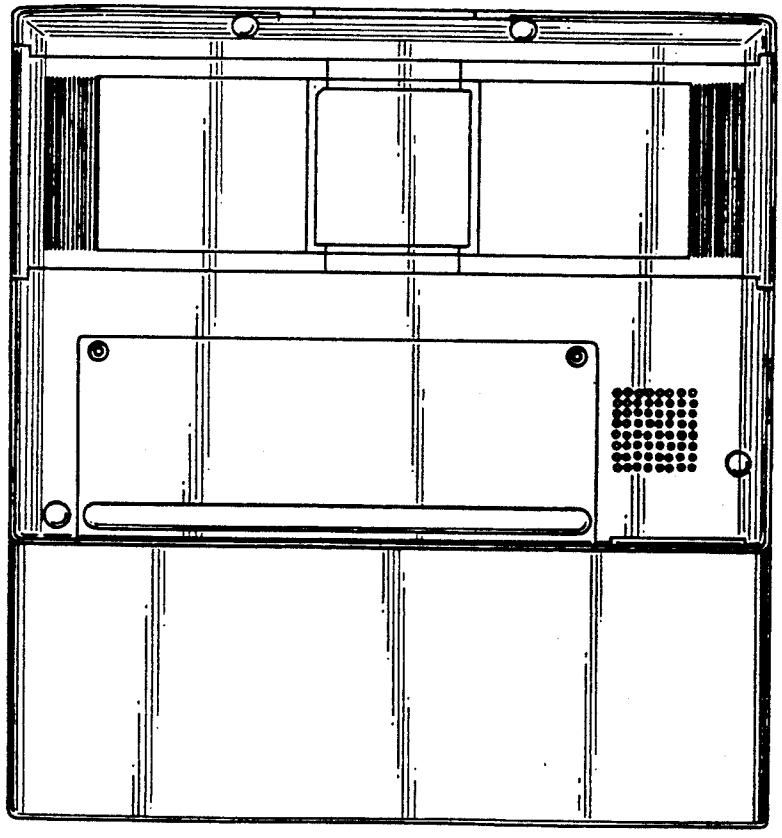

FIG.7



FIG.8

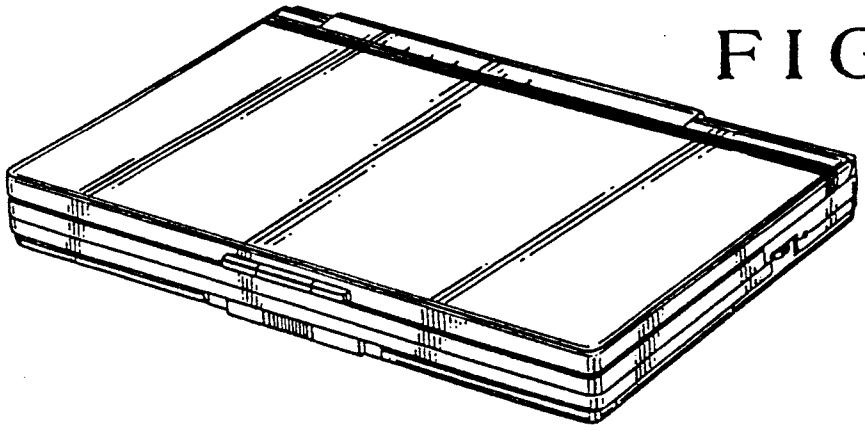

FIG.9

