(12) INTERNATIONAL APPLICATION PUBLISHED UNDER THE PATENT COOPERATION TREATY (PCT)

(19) World Intellectual Property Organization
International Bureau

(43) International Publication Date
11 November 2021 (11.11.2021)

WIPO | PCT

(10) International Publication Number
WO 2021/226018 A1

(51) International Patent Classification:
H01R 24/38 (2011.01) *A61L 2/08* (2006.01)
H01R 33/00 (2006.01) *A61L 9/18* (2006.01)
F21V 21/02 (2006.01)

(21) International Application Number:
PCT/US2021/030568

(22) International Filing Date:
04 May 2021 (04.05.2021)

(25) Filing Language: English

(26) Publication Language: English

(30) Priority Data:
63/019,954 04 May 2020 (04.05.2020) US

(72) Inventor; and

(71) Applicant: **KOHEN, Ran Roland** [US/US]; 16111 Biscayne Blvd., North Miami, Florida 33160 (US).

(74) Agent: **BIANCO, Paul D.**; Fleit Intellectual Property Law, 21355 E. Dixie Highway, Suite 115, Miami, Florida 33180 (US).

(81) Designated States *(unless otherwise indicated, for every kind of national protection available)*: AE, AG, AL, AM, AO, AT, AU, AZ, BA, BB, BG, BH, BN, BR, BW, BY, BZ, CA, CH, CL, CN, CO, CR, CU, CZ, DE, DJ, DK, DM, DO, DZ, EC, EE, EG, ES, FI, GB, GD, GE, GH, GM, GT, HN, HR, HU, ID, IL, IN, IR, IS, IT, JO, JP, KE, KG, KH, KN, KP, KR, KW, KZ, LA, LC, LK, LR, LS, LU, LY, MA, MD, ME, MG, MK, MN, MW, MX, MY, MZ, NA, NG, NI, NO, NZ, OM, PA, PE, PG, PH, PL, PT, QA, RO, RS, RU, RW, SA, SC, SD, SE, SG, SK, SL, ST, SV, SY, TH, TJ, TM, TN, TR, TT, TZ, UA, UG, US, UZ, VC, VN, WS, ZA, ZM, ZW.

(84) Designated States *(unless otherwise indicated, for every kind of regional protection available)*: ARIPO (BW, GH, GM, KE, LR, LS, MW, MZ, NA, RW, SD, SL, ST, SZ, TZ, UG, ZM, ZW), Eurasian (AM, AZ, BY, KG, KZ, RU, TJ,

WO 2021/226018 A1

(54) Title: QUICK CONNECT DEVICE WITH DISINFECTION FEATURE AND LIGHTING FIXTURE FOR LIGHTING AND DISINFECTION

FIG. 8

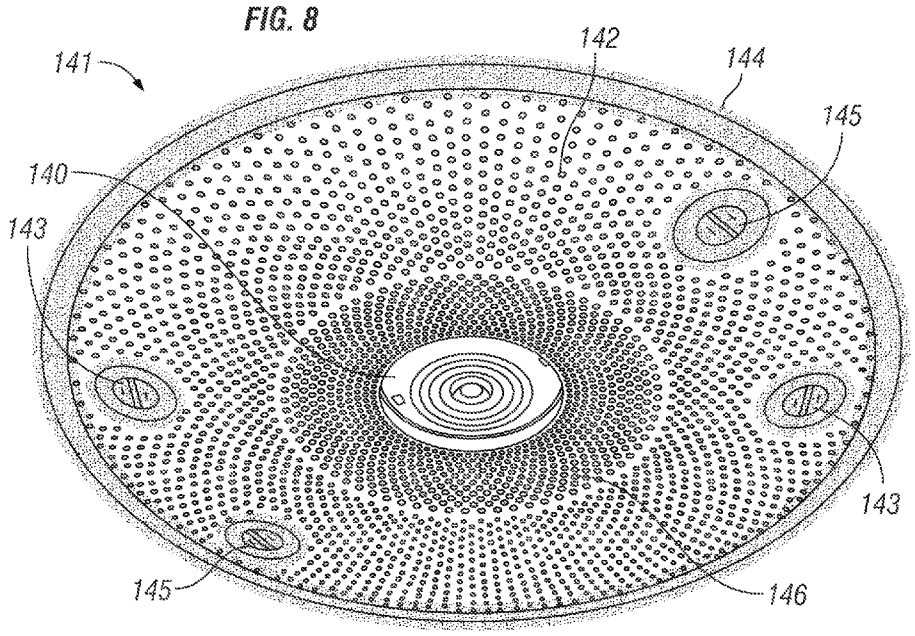

(57) Abstract: Electrical connectors and fixtures, and more particularly, electrical plug and socket combinations allowing quick connection and mounting of electrical fixtures are provided with a disinfection feature for disinfecting air and/or surfaces. Additionally, lighting fixtures include or are retrofitted to provide both lighting and disinfection functions. The disinfection feature can be provided by any suitable source of UV radiation, such as an LED array. The emitted UV radiation is UV-A or FAR UV-C so that disinfection can occur regardless of whether a human is exposed to the emitted UV radiation or the emitted UV radiation is UV-C so that disinfection should only occur if there is no human exposure to the emitted UV radiation. Some electrical connectors and fixture can provide both types of emitted UV radiation, which are selectively actuatable.

[Continued on next page]

TM), European (AL, AT, BE, BG, CH, CY, CZ, DE, DK, EE, ES, FI, FR, GB, GR, HR, HU, IE, IS, IT, LT, LU, LV, MC, MK, MT, NL, NO, PL, PT, RO, RS, SE, SI, SK, SM, TR), OAPI (BF, BJ, CF, CG, CI, CM, GA, GN, GQ, GW, KM, ML, MR, NE, SN, TD, TG).

Published:

— *with international search report (Art. 21(3))*

QUICK CONNECT DEVICE WITH DISINFECTION FEATURE AND LIGHTING FIXTURE FOR LIGHTING AND DISINFECTION

Field of the Disclosure

The disclosure relates to electrical connectors and fixtures, and more particularly, to an electrical plug and socket combination allowing quick connection and mounting of electrical fixtures and having a disinfection feature for disinfecting air and/or surfaces. The disclosure also relates to a lighting fixture that includes or is retrofitted to provide both lighting and disinfection functions.

Related Patents and Applications

This disclosure relates to U.S. Patent Application No. 62/486,132 filed April 17, 2017; PCT International Patent Application No. PCT/US18/27956 filed April 17, 2018 (published as WO 2018/195068 A1); U.S. Patent Application No. 62/467,176 filed March 5, 2017; PCT International Patent Application No. PCT/US2016/032170 filed May 12, 2016 (published as WO 2016/183354 A1); U.S. Patent Nos. 7,462,066 filed March 20, 2007; 7,192,303 filed December 2, 2004; and 6,962,498 filed December 12, 2001; and to U.S. Patent Application Publication No. 2009/0280673 filed December 2, 2005; U.S. Provisional Applications 62/160,585 filed May 12, 2015; 62/308,718, filed March 15, 2016; 62/467,176 filed March 5, 2017; 62,470,170 filed March 10, 2017; 62/515,464, filed June 5, 2017; and U.S. Patent Application No. 62/807,889 filed February 20, 2019, the contents of all of which are hereby incorporated by reference herein, in their entirety.

Background of the Disclosure

The use of UV light for disinfecting is generally known. However, some UV wavelengths have no effect on killing microorganisms. Such emitted wavelengths waste energy and can be harmful to humans over time. Such lamps also need a high voltage power supply, which can create safety issues.

The patents identified above in the Related Patents and Applications Section disclose various embodiments of quick connect devices and lighting fixtures. In particular, these related patents and applications disclose various embodiments of plug and socket combinations that permit quick connection of an electrical fixture or appliance at an electrical junction box on a wall or ceiling. The socket is secured on the wall or ceiling near electrical power supply wiring and includes female receptacles which receive male electrical prongs carried on the plug. The

electrical fixture is secured to the plug. In addition to the quick electrical connection provided by this plug and socket combination, a mechanical connection between the plug and socket carries the mechanical load of the electrical fixture.

This disclosure sets forth improvements related to various embodiments of the plug and socket combinations in the related patents and applications having a disinfection feature. Lighting fixtures that include or are retrofitted to provide both lighting and disinfection functions are also disclosed.

Summary

One aspect of the disclosure relates to a canopy for a light fixture, with the canopy including a connector for coupling to the light fixture, a plug of a quick connect device, and a plurality of emitters emitting UVA and/or FAR UVC radiation. The plurality of emitters can include a coupler for supplying electricity thereto and the canopy can include an aperture for accommodating the coupler. In an embodiment, the plurality of emitters forms a ring on a periphery of the canopy. The plurality of emitters can be an array of LEDs that emits UVA radiation.

The canopy can include an antenna and/or sensor array to control selective activation of the plurality of emitters and/or illumination of the light fixture. In an embodiment, the plurality of emitters is removably attached to the canopy. The removable attachment can be achieved with at least one of a screw connection, a hook and loop fastener, a magnetic coupling, and an adhesive. The removable attachment can be at any location of the canopy, but in an exemplary embodiment, the removable attachment is at a base of the canopy.

Another aspect of the disclosure relates to a smart quick connect device for electrically and mechanically connecting an electrical fixture, the device comprising a socket and a plurality of emitters emitting UV radiation. In an embodiment, the plurality of emitters includes a first plurality of emitters in the form of a ring along a periphery of the smart quick connect device and a second plurality of emitters centrally located within the ring on the smart quick connect device.

The first and second plurality of emitters can be separately activatable, with the first plurality of emitters emitting UVA and/or FAR UVC radiation when activated and the second plurality of emitters emitting UVC radiation when activated. In an embodiment, the first plurality of emitters comprises a first array of LEDs and the second plurality of emitters comprises a second array of LEDs. The first array of LED's can emit UVA radiation when activated.

In some embodiments, the smart quick connect device further comprises at least one sensing unit for wirelessly communicating a sensed condition and/or for wireless receiving a signal. The at least one sensing unit can include a sensor for wirelessly receiving a command signal to control the device and/or an associated electrical fixture, with the sensor controlling activation of the first and second plurality of emitters. The command signal can result from the sensed condition. The at least one sensing unit can include a sensor for sensing an environmental condition, with activation of the first and second plurality of emitters determined by the sensed environmental condition. In some embodiments, the smart quick connect device further comprises a speaker/microphone assembly.

Another aspect of the disclosure relates to a smoke and CO_2 detector with a plurality of emitters emitting UVA and/or FAR UVC radiation when activated. In some embodiments, the plurality of emitters forms a ring on a periphery of the detector. In an exemplary embodiment, the plurality of emitters is an array of LEDs, with the array of LEDs emits UVA radiation when activated.

The detector can further comprise a plurality of UVC emitters emitting UVC radiation when activated, with the plurality of emitters and plurality of UVC emitters separately activatable.

Another aspect of the disclosure relates to a recessed lighting fixture with a housing and a trim, with the trim including at least one emitter emitting UVA radiation. The at least one emitter can be a ring of emitters emitting UVA radiation.

Brief Description of the Drawings

A more complete understanding of the present disclosure, and the attendant advantages and features thereof, will be more readily understood by reference to the following detailed description when considered in conjunction with the accompanying drawings (which form an integral part of the description and are to be read in conjunction therewith, and in which like reference numerals are employed to designate identical components in the various views) wherein:

FIG. 1 depicts a canopy according to the disclosure that includes a plug of a quick connect device and a UV disinfecting ring;

FIG. 2 depicts a first exemplary mechanism for attaching the UV disinfecting ring;

FIG. 3 depicts a second exemplary mechanism for attaching the UV disinfecting ring;

FIG. 4 depicts a third exemplary mechanism for attaching the UV disinfecting ring;

FIG. 5 depicts a fourth exemplary mechanism for attaching the UV disinfecting ring;

FIGS. 6A-6C depict a recessed lighting fixture with a UV disinfecting ring according to the disclosure;

FIGS. 7A and 7B depict flush mount fixtures with disinfecting rings;

FIG. 8 depicts a socket of a smart quick connect device with a UV-C disinfecting assembly and a UV-A disinfecting ring;

FIGS. 9A and 9B depict the socket of the smart quick connect device of FIG. 8 with the UV-C disinfecting assembly (FIG. 9A) and the UV-A disinfecting ring (FIG. 9B) selectively activated;

FIGS. 10A and 10B depict another embodiment of a socket of a smart quick connect device with a UV-C disinfecting assembly and a UV-A disinfecting ring; and

FIGS. 11A and 11B depict a smoke and CO_2 detector with a UV disinfecting ring (FIG. 11A) and with an integrated disinfecting central portion and disinfecting ring (FIG. 11B).

Detailed Description

As required, embodiments are disclosed herein; however, it is to be understood that the disclosed embodiments are merely examples and that the devices and methods described below can be embodied in various forms. Therefore, specific structural and functional details disclosed herein are not to be interpreted as limiting, but merely as a representative basis for teaching one skilled in the art to variously employ the present subject matter in virtually any appropriately detailed structure and function. Further, the terms and phrases used herein are not intended to be limiting, but rather, to provide an understandable description of the concepts.

The terms “a” or “an”, as used herein, are defined as one or more than one. The term plurality, as used herein, is defined as two or more than two. The term another, as used herein, is defined as at least a second or more. The terms “including” and “having,” as used herein, are defined as comprising (i.e., open language). The term “coupled,” as used herein, is defined as “connected,” although not necessarily directly, and not necessarily mechanically.

The disclosure herein relates to the inventor’s prior work, such as that set forth above in the documents identified in the Related Patents and Applications section, the contents of each of which are herein incorporated in their entirety by reference. In this regard, the plug and/or socket can include a sensing unit for at least one of wirelessly communicating a sensed condition and wirelessly receiving a signal as disclosed in PCT International Patent Application No. PCT/US2016/032170 filed May 12, 2016 and PCT International Patent Application No. PCT/US2018/020987 filed March 5, 2018.

A “quick connect device” for installing electrical fixtures comprises the combination of a plug and mating socket, which is also known as a receptacle. The plug and mating socket of the

device function to both establish an electrical connection between an electrical fixture and electrical supply wiring, and mechanically support the fixture on a surface or base, typically a wall, ceiling or floor surface. As used herein, the term "fixture" or "electrical fixture" means any fixture or appliance such as a lighting fixture, ceiling fan, television camera, security device or any other device which is powered by electricity supplied by electrical wiring, and which requires a mechanical connection to support or suspend the fixture. The plug is fixedly secured to an electrical fixture, while the socket is secured to either the surface (e.g., wall, ceiling or floor) on which the fixture is to be mounted, or to an electrical junction box. The structure, function, and operation of the plug and mating socket, generally, have already been detailed in, for example, the patents and application incorporated by reference herein.

Referring for example to the incorporated reference published as PCT/US2016/032170 (the "'170 publication"), a quick connect device 20 for installing electrical fixtures comprises the combination of a plug 22 and mating socket 24. A detailed description of the structure and function of a plug 22 and spindle assembly 34 is provided in the '170 publication and other incorporated references. As in the '170 publication, one or more sensors or other receiving/input or transmitting/output electronic or electrical devices 48, 50 (hereinafter 'sensors') can be associated with either plug 22 or socket 24. Socket 24 is known, as disclosed in the incorporated references, and as codified in the U.S. National Electric Code.

Devices of the disclosure can be provided with or attached to electronic sensors and/or processors, transmitters and/or receivers, and other electronic circuits, and which may be deemed 'smart' devices, or device of the disclosure may be associated with power consuming devices such as lights or fans, which may or may not include 'smart' electronics or components, or other electronics which are unrelated to the operation of the device itself.

This disclosure relates to combining the above-described technology with a source of electromagnetic radiation, primarily ultraviolet (UV) rays for disinfection of air and surfaces exposed to the radiation. Wavelengths of visible light range between 400 and 700 nanometers (nm) and are generally not considered efficient for germicidal disinfection. UV wavelengths are in the range of 200 nm to 390 nm and have optimal UV germicidal action at 254-265 nm. For UV sterilization, only UV-C (100-280 nm) has high enough energy to effectively kill microorganisms. Although UV-C can immediately kill pathogens, UV-C generally should be used without humans present (or the exposure of humans should limited to no more than a certain number of minutes per day) because of potential adverse health consequences.

UV-A (315 to 400 nm band) energy or short-wavelength energy in the violet or blue range destroy pathogens over longer exposure times. The typical product mixes violet LEDs and white LEDs in a luminaire and only uses the violet LEDs during periods when a space is being

disinfected. The mixed white and violet light is still usable for humans working in the space. The violet energy destroys pathogens over long exposure times.

Although there is evidence that FAR UV-C (207-222 nm) is considered both safe to humans and effective in killing microorganisms, FAR UV-C does not have the extensive data supporting the safety and efficacy that UV-A has.

FIG. 1 shows a canopy 100 that includes a disinfecting ring 102 that emits UV radiation for disinfection. Although disinfecting ring 102 can include any suitable source of UV radiation, in an exemplary embodiment the UV radiation source is an LED array. In one embodiment, the emitted UV radiation is UV-A or FAR UV-C so that disinfecting ring 102 can emit the radiation regardless of whether a human is exposed to the emitted UV radiation (*e.g.* an occupied room) or not (*e.g.* an unoccupied room). In another embodiment, the emitted UV radiation is UV-C so that disinfecting ring 102 should only emit the radiation if there is no human exposure to the emitted UV radiation (*e.g.* an occupied room).

A user selected light fixture would be attached to shaft 104 to provide illumination. Canopy 100 includes plug 106 (as set forth in the '170 publication and other incorporated by reference related patents and applications set forth above) that removably connects to a socket of a quick connect device (again as set forth in the '170 publication and other incorporated by reference related patents and applications set forth above). Canopy 100 can also include an antenna and/or sensor array 108 to control selective activation of disinfecting ring 102 and/or illumination of the light fixture (and/or a ceiling fan if incorporated in the light fixture).

Disinfecting ring 102 can be integrally formed with canopy 100 or can be removably attached to canopy 100. Removable attachment would be particularly useful to replace disinfecting ring 102 (for example to change the wavelength or replace) or to retrofit a canopy 100 with disinfecting ring 102.

FIGS. 2-5 show various exemplary manners in which disinfecting ring 102 can be removably attached to canopy 100. These include but are not limited to a threading mechanism (FIG. 2), hook and loop fasteners (FIG. 3) or other mechanical fasteners, magnetic coupling (FIG. 4), and adhesives (FIG. 5). As shown in FIGS. 2-5, disinfecting ring 102 can be provided with a coupler 110 for electrically connecting disinfecting ring 102. As also shown in FIG. 2, canopy 100 can be provided with an aperture 112 through which coupler 110 can be inserted to connect with an electrical power supply to energize disinfecting ring 102.

With reference to FIG. 2, canopy 100 includes threading 113 that mates with threading 114 on disinfecting ring 102. Threading 113 can be positioned on canopy 100 differently than as shown in FIG. 2, which has threading 113 positioned on canopy 100 so that disinfecting ring 102 is mounted substantially flush to the ceiling or whatever surface canopy 100 is mounted on.

With reference to FIG. 3, canopy 100 includes one of a hook and loop fastener 115 that releasably engages with the other of the hook and loop fastener 116 on disinfecting ring 102. Hook/loop fastener 115 can be positioned on canopy 100 differently than as shown in FIG. 3, which has hook/loop fastener 115 positioned on canopy 100 so that disinfecting ring 102 is mounted substantially flush to the ceiling or whatever surface canopy 100 is mounted on.

With reference to FIG. 4, canopy 100 is either made of a ferromagnetic material, includes one or more portions that are ferromagnetic, or includes one or more magnetic sections 117. Disinfecting ring 102 has a portion 118 that includes a ferromagnetic material or includes one or more magnets. If canopy 100 is made of a ferromagnetic material, disinfecting ring 102 can be positioned on canopy 100 as desired. Alternatively, magnetic sections 117 can be located on canopy 100 so that disinfecting ring 102 is positioned on canopy 100 as desired.

With reference to FIG. 5, disinfecting ring 102 includes an adhesive material 119 for affixing disinfecting ring 102 to canopy 100. In another embodiment, canopy 100 can have the adhesive material 126 in addition to or instead of disinfecting ring 102.

FIGS. 6A-6C show a recessed lighting fixture 120 that includes a housing 122 and a trim 124 that includes at least a portion with a disinfecting ring. Trim 124 includes a coupler 126 for electrically connecting the disinfecting ring of trim 124. As is well-known, recessed lighting fixture 120 includes tabs 128 for retaining recessed lighting fixture 120 in the ceiling hole. PCT International Application No. PCT/US2018/021919 filed March 12, 2018 and PCT International Application No. PCT/US2021/020233 filed March 1, 2021, both of which are incorporated by reference, disclose embodiments of recessed lighting fixture 120 that include a quick connect device.

Although the disinfecting ring of trim 124 can include any suitable source of UV radiation, in an exemplary embodiment the UV radiation source is an LED array. In one embodiment, the emitted UV radiation is UV-A or FAR UV-C so that the disinfecting ring can emit the radiation regardless of whether a human is exposed to the emitted UV radiation (*e.g.* an occupied room) or not (*e.g.* an unoccupied room). In another embodiment, the emitted UV radiation is UV-C so that the disinfecting ring should only emit the radiation if there is no human exposure to the emitted UV radiation (*e.g.* an occupied room). In this regard, FIG. 6A shows two recessed lighting fixtures 120a, 120b with recessed lighting fixture 120a having an activated LED array and the LED array of recessed lighting fixture 120b not activated.

FIGS. 7A and 7B show two versions of a flush mount fixture with a disinfecting ring. For fixture 130, disinfecting ring 132 is found proximal the ceiling mount and visible light for illumination comes from transparent or translucent lens 131, with a light source located inside fixture 130. If desired, side surface 133 can also be transparent or translucent to allow the

passage of light. For fixture 134, disinfecting ring 136 is found distal the ceiling mount and visible light for illumination comes from transparent or translucent lens 135, with a light source located inside fixture 134. If desired, side surface 138 can also be transparent or translucent to allow the passage of light. As the location of the disinfecting ring can affect disinfection, the fixture can be selected depending on the application.

Although disinfecting ring 132, 136 can include any suitable source of UV radiation, in an exemplary embodiment the UV radiation source is an LED array. In one embodiment, the emitted UV radiation is UV-A or FAR UV-C so that the disinfecting ring can emit the radiation regardless of whether a human is exposed to the emitted UV radiation (*e.g.* an occupied room) or not (*e.g.* an unoccupied room). In another embodiment, the emitted UV radiation is UV-C so that the disinfecting ring should only emit the radiation if there is no human exposure to the emitted UV radiation (*e.g.* an occupied room).

FIG. 8 depicts a socket 140 of a smart quick connect device 141 with central UVC emitters 142 and a UVA disinfecting ring 144. Smart quick connect device 141 may include one or more sensing units 143 for wirelessly communicating a sensed condition. Alternatively or in addition, smart quick connect device 141 can include one or more sensing units 145 for wirelessly receiving a signal. The signal can be a command signal to control smart quick connect device 141, the associated electrical fixture (via socket 140), and/or UVC emitters 142 and disinfecting ring 144. The command signal can be independent of or as a result of the sensed condition. Although sensing units 143, 145 can have microphone, speaker, or both microphone and speaker functions, smart quick connect device 141 can include a separate speaker/microphone assembly 146.

Sensing units 143, 145 can function to provide the sensing, communications, transmission, and other functions as described herein. These functions can include any or all of, for example, BLUETOOTH communication of information; WiFi communication, for example with a function of hub, router, access point, or relay; a motion sensor to detect movement, or an infrared, sound, and/or heat sensor to detect the presence of humans or animals, useable for example to control an HVAC system or to provide input for an alarm or monitoring system; thermostat; camera for communication, or for an alarm or monitoring system; speaker; smoke detector; fire detector; occupancy detector using any of a variety of appropriate sensors, such as motion, infrared, audio, image detection, image recognition, or air pressure; humidity sensor, for example to protect art or identify leaks or water intrusion; and a power consumption meter to detect intrusion or to improve efficiency; and smoke and/or air quality sensors. Herein, for brevity, the terms ‘sensing unit’ and ‘sensor’ are used to collectively refer to any device which can carry out one or more of the foregoing functions, and it should therefore be understood that a

'sensing unit' or 'sensor' herein can sense a condition, actuate, transmit, receive, both send and receive, or is otherwise configured to carry out any of the foregoing functions.

Devices of the disclosure equipped with sensing units 143, 145 can form part of a "smart home" architecture and operation, such as are made by GE and other companies. Accordingly, the electronic board(s) of sensing unit 143, 145 can be provided with electronic circuitry, including an electronic processor, memory, storage, and other components which can enable programming and remote operation associated with such a function. Remote operation can include a central programming or control program which controls the functioning of a device of the disclosure. This can include, for example, control from a website, or control from an app executing upon a smartphone or tablet. Alternatively, a handheld TV/DVR style remote control device can be used.

Devices of the disclosure can include one more sensors which can function as any or all of intelligent thermostats, intelligent hazard-detection unit, intelligent entryway-interface device, smart switch, including smart wall-like switches, smart utilities interface or interface to other service, such as smart wall-plug interface, and a wide variety of intelligent, multi-sensing, network-connected appliances, including refrigerators, televisions, washers, dryers, lights, audio systems, intercom systems, mechanical actuators, wall air conditioners, pool-heating units, irrigation systems, and many other types of intelligent appliances and systems.

Devices of the disclosure can include one or more different types of sensors, one or more controllers and/or actuators, and one or more communications interfaces that connect the smart-home devices to other smart-home devices, routers, bridges, and hubs within a local smart-home environment, various different types of local computer systems, and to the Internet, through which a smart-home device may communicate with cloud-computing servers and other remote computing systems. Data communications can be carried out by sensors 143, 145 and the electronics board(s) associated therewith using any of a large variety of different types of communications media and protocols, including wireless protocols, such as Wi-Fi, ZigBee, 6LoWPAN, various types of wired protocols, including CAT6 Ethernet, HomePlug, and other such wired protocols, and various other types of communications protocols and technologies. Devices of the disclosure can integrate with each other, or with previously known so-called 'smart-home' devices, and may themselves operate as intermediate communications devices, such as repeaters, for smart-home devices and other devices of the disclosure. A smart-home environment including devices of the disclosure can additionally include a variety of different types of legacy appliances and devices which lack communications interfaces and processor-based controllers.

A partial list of input sensors 145 that can be incorporated into the various devices of the disclosure includes, but is not limited to, the following examples:

a. zero voltage crossing- used to determine when to trigger TRIACs/IGBTs to control power delivered to attached loads;

b. communications (WiFi, Bluetooth, nRF24)- used to wirelessly receive incoming commands from remote control of output devices, and wifi repeaters;

c. microphone- used for room occupancy detection, or for voice recognition, including carryout out commands by voice;

d. motion detection used for room occupancy detection or intrusion, and to issue or signal an alarm;

e. temperature and humidity sensors- used to make heating/cooling changes;

f. smoke and/or gas detectors, including detectors responsive to the presence of carbon monoxide (CO), propane and other fuels, radon, or any other gas or volatile element, and which can be used to signal or provide an alarm, and which can be used to take emergency/warning actions;

g. glass breakage detectors- used to control security devices;

h. detectors for dangerous substances;

i. a light dimmer;

j. sensors for detecting movement or sounds, including for example waving or clapping or other noises, which can be used to change a light level or other environmental parameter.

A partial list of output sensors 143 includes, but is not limited to, the following:

A. triacs/IGBTs used to control fan and lights;

B. communications (WiFi, Bluetooth, nRF24), used to transmit status or convey emergency situations, or to relay information;

C. security camera: used to capture and forward images when triggered by various input sources, including for example a 360 degree camera; and

D. emergency backup light: used to provide minimal lighting in emergency situations.

These output sensors 143 can be activated based upon connected input sources 145, or by remote commands received from a communications circuit associated with the device of the disclosure. In some cases, sensors 143, 145 operate as both input and output devices. Additionally, it should be understood that other input, output, or combination devices exist, or which may be hereinafter developed, which can be incorporated into smart quick connect device 141 of the disclosure, and that the foregoing list contains only a few such examples.

As shown in FIGS. 9A and 9B, central UVC emitters 142 and UVA disinfecting ring 144 can be selectively activated and deactivated. Such selective activation and deactivation can be

useful if different wavelengths and treatments are applied by central UVC emitters 142 and UVA disinfecting ring 144. In this regard, the disclosure contemplates that emitters 142 and disinfecting ring 144 can be switched (*i.e.* emitters 142 emit UVA and disinfecting ring 144 emits UVC).

Although emitters 142 and disinfecting ring 144 can include any suitable source of UV radiation, in an exemplary embodiment the UV radiation source is an LED array. In one embodiment, the emitted UV radiation of disinfecting ring 144 is UV-A or FAR UV-C so that disinfecting ring 144 can emit the radiation regardless of whether a human is exposed to the emitted UV radiation (*e.g.* an occupied room) or not (*e.g.* an unoccupied room) and the emitted UV radiation of emitters 142 is UV-C so that emitters 142 should only emit the radiation if there is no human exposure to the emitted UV radiation (*e.g.* an occupied room).

FIGS. 10A and 10B depict a socket 150 of a smart quick connect device 152. In addition to socket 150, smart quick connect device 152 includes a body 154 with a peripheral disinfecting ring 156 and embedded disinfecting UV emitters 158.

As was the case for smart quick connect device 141, smart quick connect device 152 may include one or more sensing units (analogous to sensing units 143) for wirelessly communicating a sensed condition. Alternatively or in addition, smart quick connect device 152 can include one or more sensing units (analogous to sensing units 145) for wirelessly receiving a signal. The signal can be a command signal to control smart quick connect device 152, the associated electrical fixture (via socket 150), and/or emitters 158 and disinfecting ring 156. The command signal can be independent of or as a result of the sensed condition. Although these sensing units can be positioned in any suitable location of smart quick connect device 152, in an exemplary embodiment, the sensing units are located within or on body 154.

FIG. 10A shows only disinfecting ring 156 activated and FIG. 10B shows both disinfecting ring 156 and embedded UV emitters 158 activated. As these figures illustrate, embedded emitters 158 and disinfecting ring 156 can be selectively activated and deactivated. Such selective activation and deactivation can be useful if different wavelengths and treatments are applied by emitters 158 and disinfecting ring 156. In an exemplary embodiment, emitters 158 emit UVC radiation and disinfecting ring 156 emits UVA and/or FAR UVC radiation. However, the disclosure contemplates that emitters 158 and disinfecting ring 156 can be switched (*i.e.* emitters 158 emit UVA and/or FAR UVC and disinfecting ring 156 emits UVC).

Although emitters 158 and disinfecting ring 156 can include any suitable source of UV radiation, in an exemplary embodiment the UV radiation source is an LED array. In one embodiment, the emitted UV radiation of disinfecting ring 156 is UV-A or FAR UV-C so that disinfecting ring 156 can emit the radiation regardless of whether a human is exposed to the

emitted UV radiation (*e.g.* an occupied room) or not (*e.g.* an unoccupied room) and the emitted UV radiation of emitters 158 is UV-C so that emitters 158 should only emit the radiation if there is no human exposure to the emitted UV radiation (*e.g.* an occupied room).

FIGS. 11A and 11B depict two versions of combined smoke and CO_2 detectors. Detector 170 includes a disinfecting ring 172 (with a structure and function substantially similar to previously described disinfecting ring 102, 132, 136, 144, 156). Detector 174 includes a disinfecting ring 176 (also with a structure and function substantially similar to previously described disinfecting ring 102, 132, 136, 144, 156) and an UV emitter 178 that is operable separately from disinfecting ring 176.

Although emitter 178 and disinfecting ring 176 (as well as disinfecting ring 172) can include any suitable source of UV radiation, in an exemplary embodiment the UV radiation source is an LED array. In one embodiment, the emitted UV radiation of disinfecting ring 172, 176 is UV-A or FAR UV-C so that disinfecting ring 172, 176 can emit the radiation regardless of whether a human is exposed to the emitted UV radiation (*e.g.* an occupied room) or not (*e.g.* an unoccupied room) and the emitted UV radiation of emitter 178 is UV-C so that emitter 178 should only emit the radiation if there is no human exposure to the emitted UV radiation (*e.g.* an occupied room).

For detector 174, emitter 178 and disinfecting ring 176 can be selectively activated and deactivated. Such selective activation and deactivation can be useful if different wavelengths and treatments are applied by emitter 178 and disinfecting ring 176. In an exemplary embodiment as set forth above, emitter 178 emits UVC radiation and disinfecting ring 176 emits UVA and/or FAR UVC radiation. However, the disclosure contemplates that emitter 178 and disinfecting ring 176 can be switched (*i.e.* emitter 178 emits UVA and/or FAR UVC and disinfecting ring 176 emits UVC).

In an exemplary embodiment, emitter 178 also includes an array of visible light that actuates to provide visual warning in addition to audible warning with detector 174 detects smoke and/or CO_2.

All references cited herein are expressly incorporated by reference in their entirety. It will be appreciated by persons skilled in the art that the present disclosure is not limited to what has been particularly shown and described herein above. In addition, unless mention was made above to the contrary, it should be noted that all of the accompanying drawings are not to scale. There are many different features to the present disclosure and it is contemplated that these features may be used together or separately. Thus, the disclosure should not be limited to any particular combination of features or to a particular application of the disclosure. Further, it should be understood that variations and modifications within the spirit and scope of the

disclosure might occur to those skilled in the art to which the disclosure pertains. Accordingly, all expedient modifications readily attainable by one versed in the art from the disclosure set forth herein that are within the scope and spirit of the present disclosure are to be included as further embodiments of the present disclosure.

5

The Claims

What is claimed is:

1. A canopy for a light fixture, wherein the canopy includes a connector for coupling to the light fixture, a plug of a quick connect device, and a plurality of emitters emitting UVA and/or FAR UVC radiation.

2. The canopy of claim 1, wherein the plurality of emitters forms a ring on a periphery of the canopy.

3. The canopy of claim 2, wherein the plurality of emitters is an array of LEDs.

4. The canopy of claim 3, wherein the array of LEDs emits UVA radiation.

5. The canopy of claim 4, further comprising an antenna and/or sensor array to control selective activation of the plurality of emitters and/or illumination of the light fixture.

6. The canopy of any one of claims 1 to 5, wherein the plurality of emitters is removably attached to the canopy.

7. The canopy of claim 6, wherein the removable attachment is achieved with at least one of a screw connection, a hook and loop fastener, a magnetic coupling, and an adhesive.

8. The canopy of claim 7, wherein the removable attachment is at a base of the canopy.

9. The canopy of claim 7, wherein the plurality of emitters includes a coupler for supplying electricity thereto and the canopy includes an aperture for accommodating the coupler.

10. A smart quick connect device for electrically and mechanically connecting an electrical fixture, the device comprising a socket and a plurality of emitters emitting UV radiation.

11. The smart quick connect device of claim 10, wherein the plurality of emitters includes a first plurality of emitters in the form of a ring along a periphery of the smart quick connect device and a second plurality of emitters centrally located within the ring on the smart quick connect device.

12. The smart quick connect device of claim 11, wherein the first and second plurality of emitters are separately activatable.

13. The smart quick connect device of claim 12, wherein the first plurality of emitters emits UVA and/or FAR UVC radiation when activated and the second plurality of emitters emits UVC radiation when activated.

14. The smart quick connect device of claim 13, wherein the first plurality of emitters comprises a first array of LEDs and the second plurality of emitters comprises a second array of LEDs.

15. The smart quick connect device of claim 14, wherein the first array of LED's emits UVA radiation when activated.

16. The smart quick connect device of claim 13, wherein the first plurality of emitters emits UVA radiation when activated.

17. The smart quick connect device of any one of claims 10 to 16, further comprising at least one sensing unit for wirelessly communicating a sensed condition and/or for wireless receiving a signal.

18. The smart quick connect device of claim 17, wherein the at least one sensing unit includes a sensor for wirelessly receiving a command signal to control the device and/or an associated electrical fixture.

19. The smart quick connect device of claim 18, wherein the sensor controls activation of the first and second plurality of emitters.

20. The smart quick connect device of claim 19, wherein the command signal results from the sensed condition.

21. The smart quick connect device of claim 17, wherein the at least one sensing unit includes a sensor for sensing an environmental condition.

22. The smart quick connect device of claim 21, wherein activation of the first and second plurality of emitters is determined by the sensed environmental condition.

23. The smart quick connect device of claim 19, wherein the command signal results from a sensed condition.

24. The smart quick connect device of claim 17, further comprising a speaker/microphone assembly.

25. A smoke and CO_2 detector with a plurality of emitters emitting UVA and/or FAR UVC radiation when activated.

26. The detector of claim 25, wherein the plurality of emitters forms a ring on a periphery of the detector.

27. The canopy of claim 26, wherein the plurality of emitters is an array of LEDs.

28. The canopy of claim 27, wherein the array of LEDs emits UVA radiation when activated.

29. The detector of any one of claims 25 to 28, further comprising a plurality of UVC emitters emitting UVC radiation when activated.

30. The detector of claim 29, wherein the plurality of emitters and plurality of UVC emitters are separately activatable.

31. A recessed lighting fixture with a housing and a trim, wherein the trim includes at least one emitter emitting UVA radiation.

32. The recessed lighting fixture of claim 1, wherein the at least one emitter is a ring of emitters emitting UVA radiation.

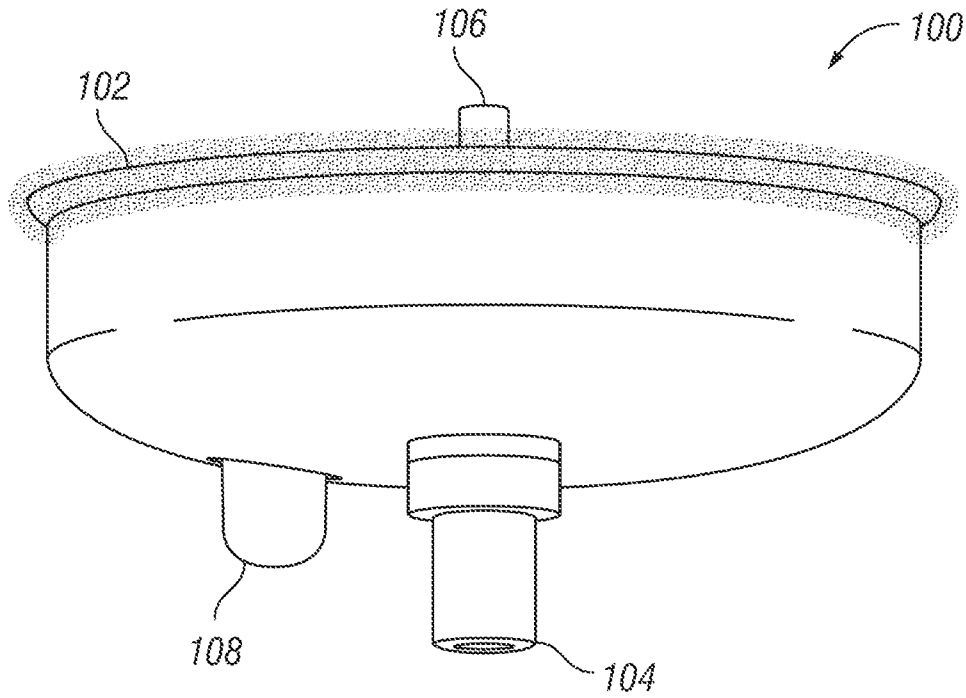

FIG. 1

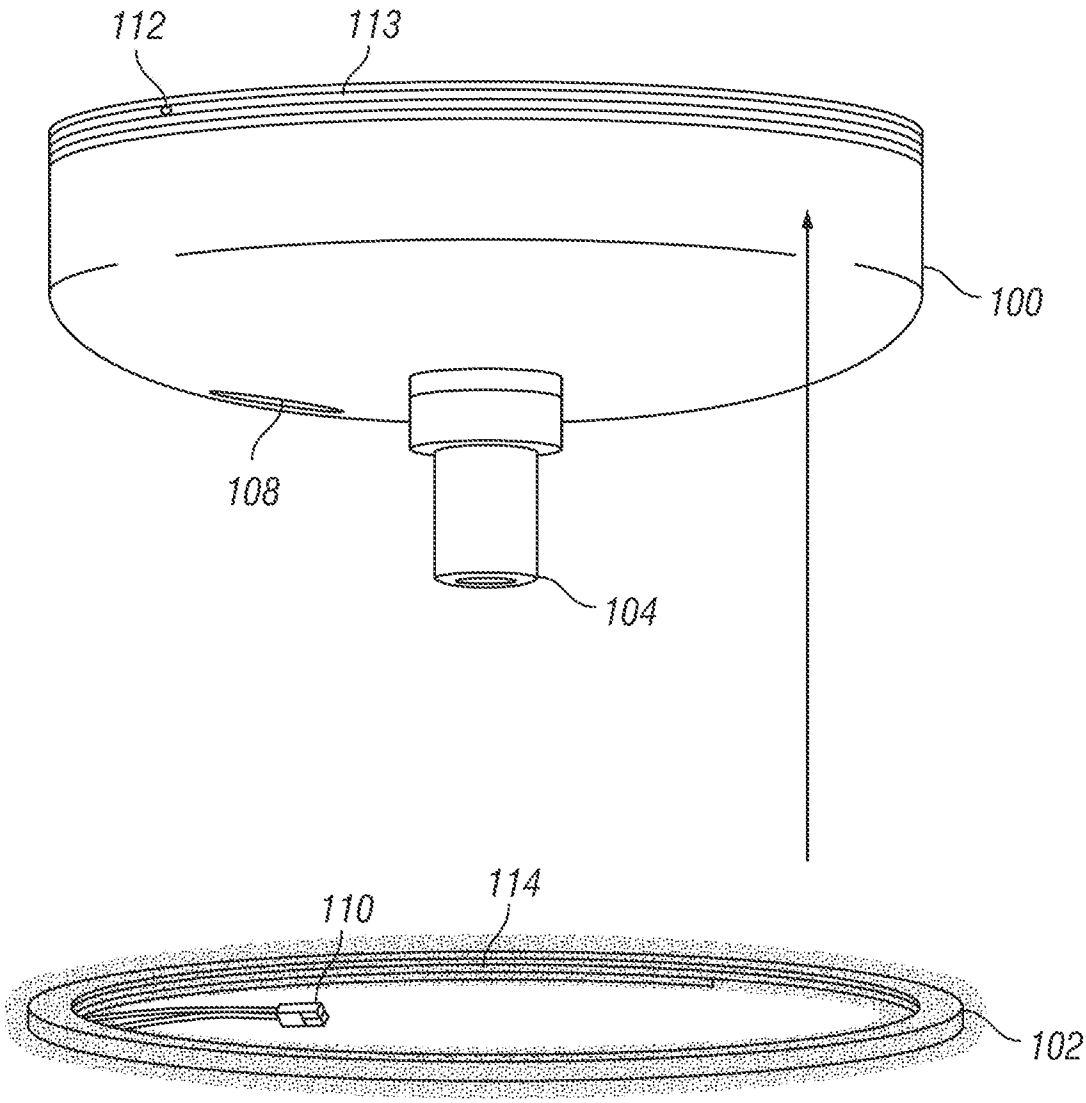

FIG. 2

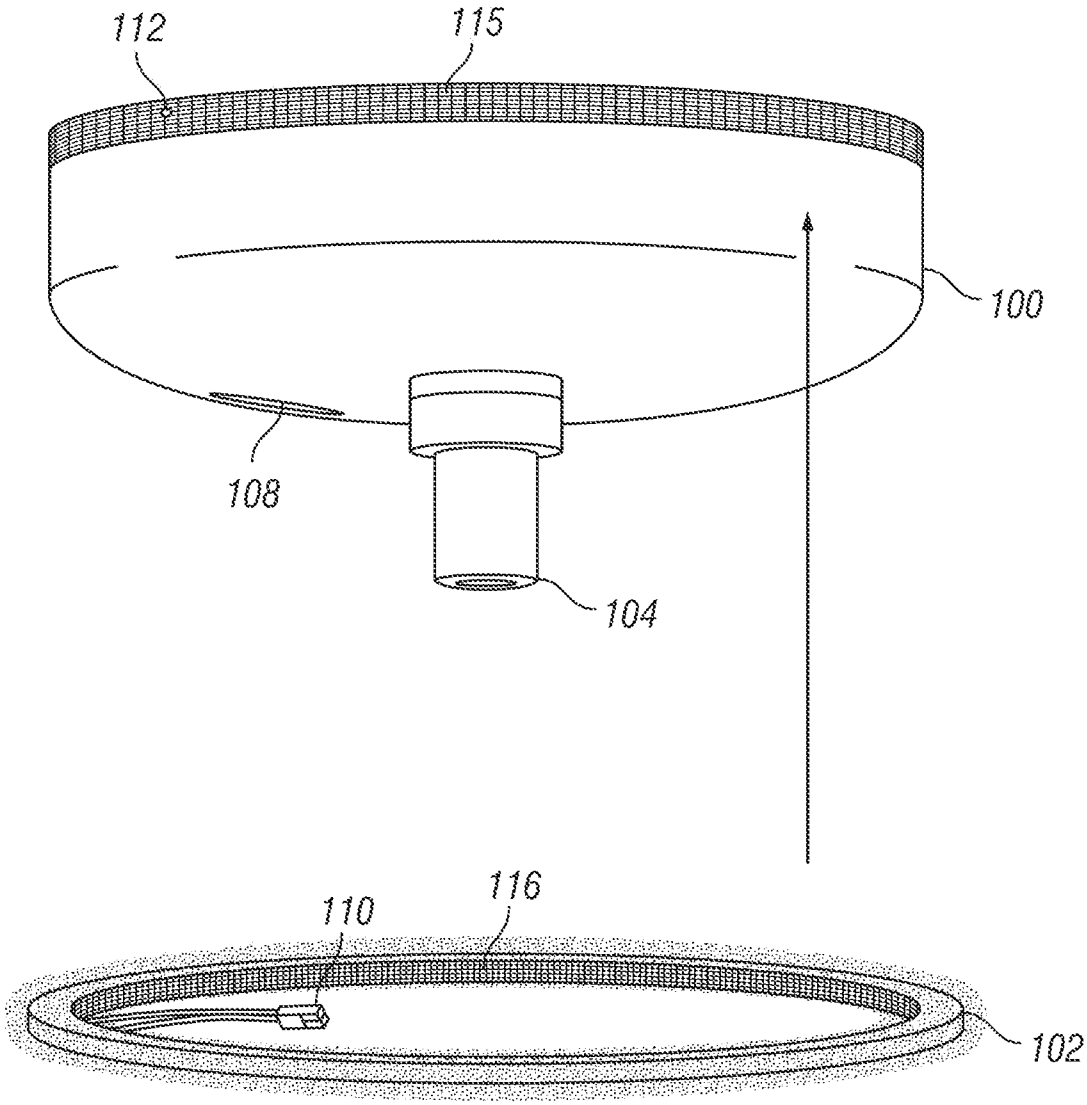

FIG. 3

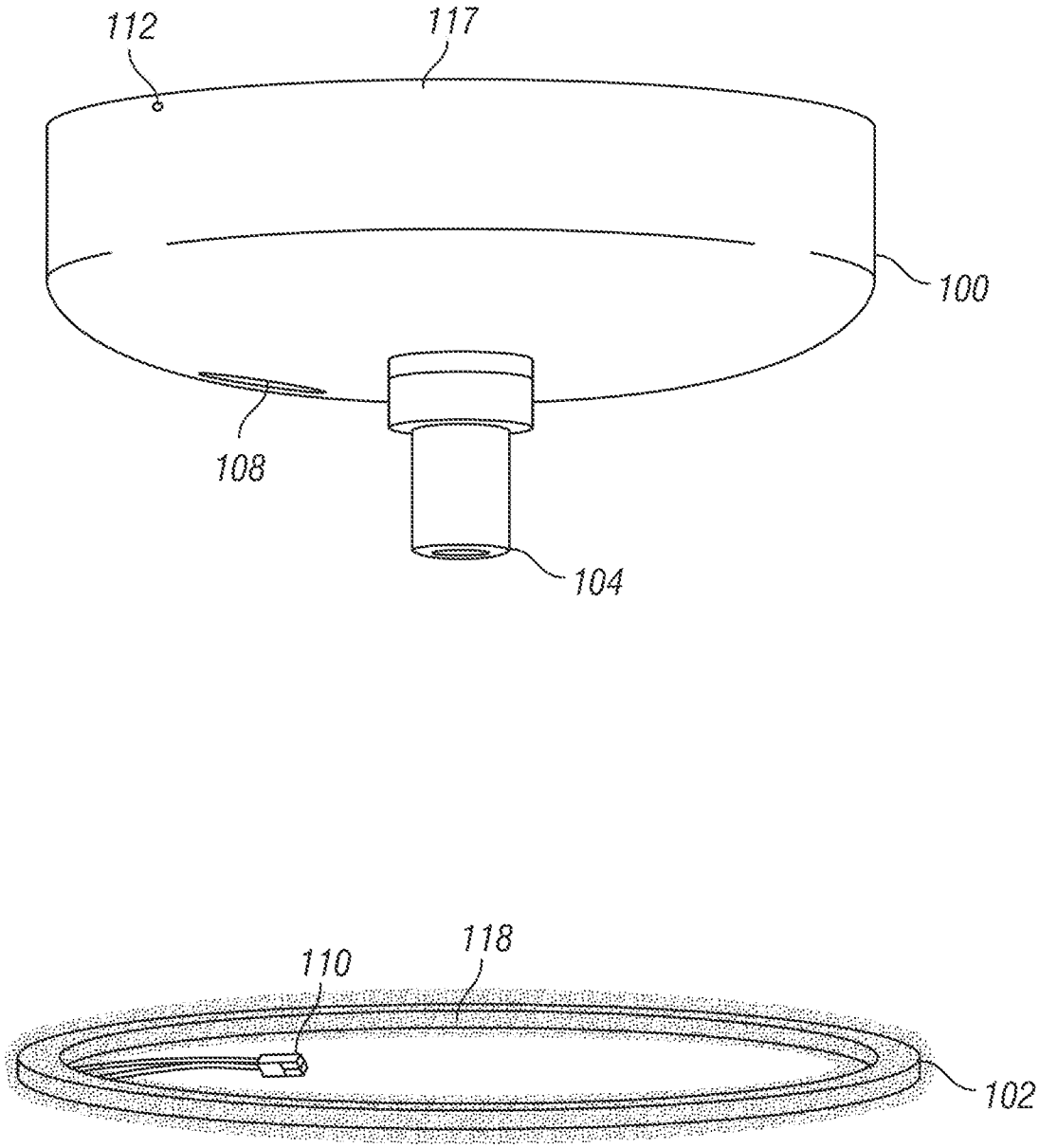

FIG. 4

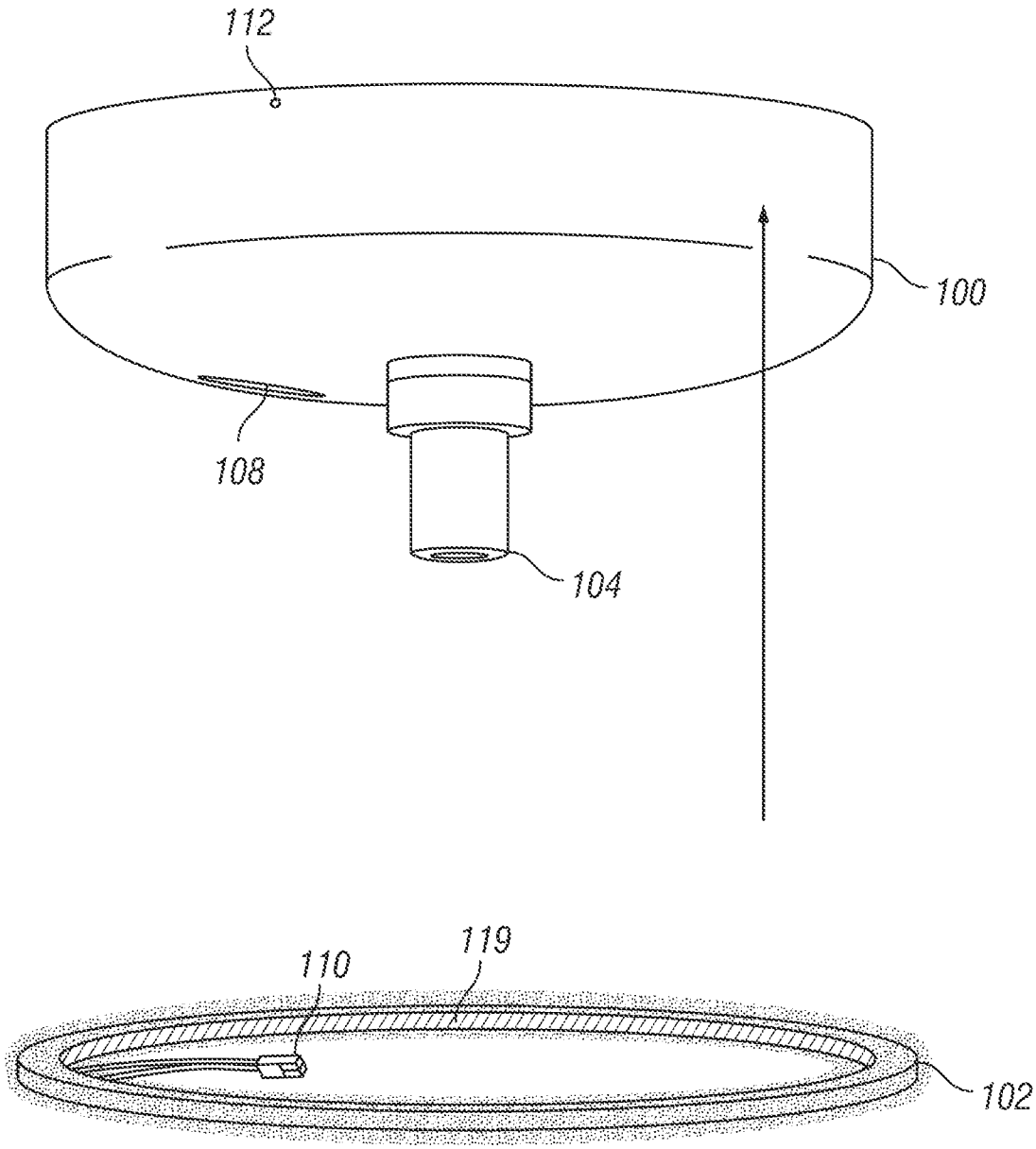

FIG. 5

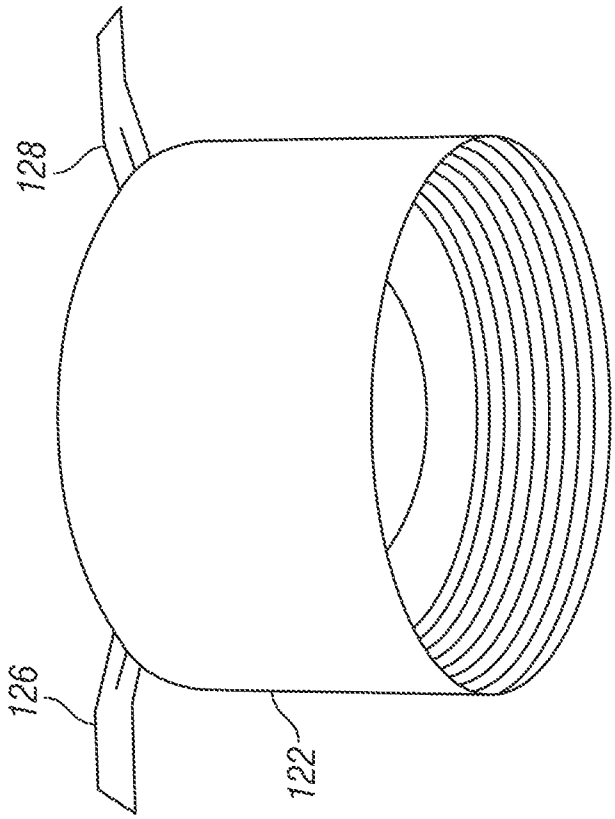

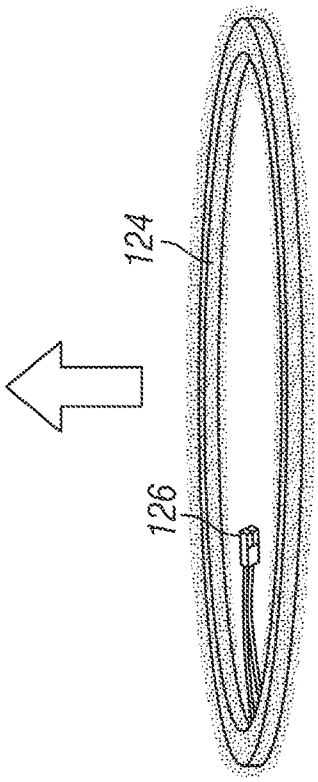

FIG. 6C

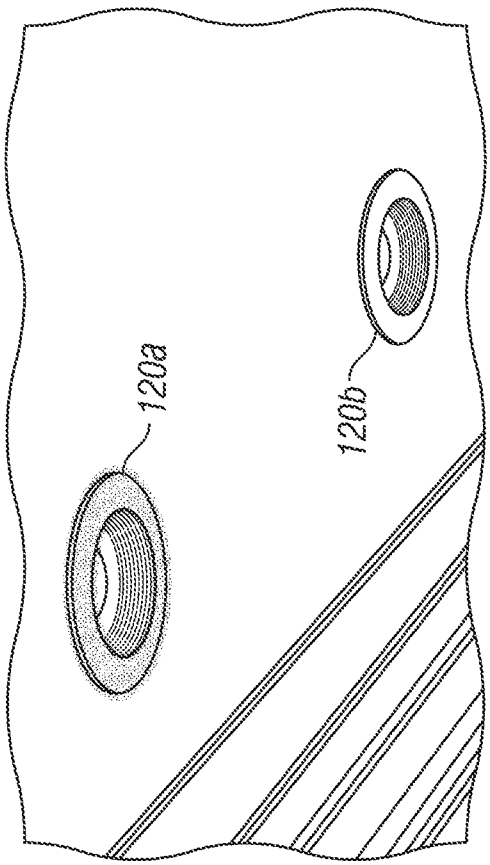

FIG. 6A

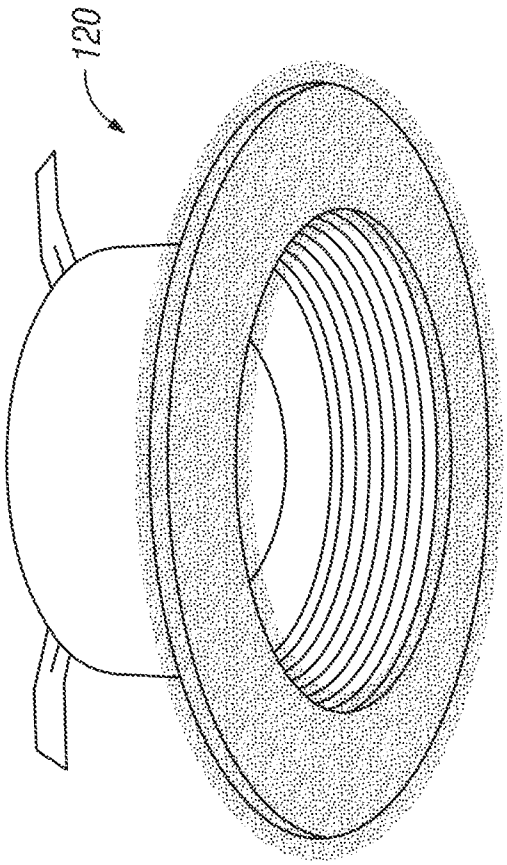

FIG. 6B

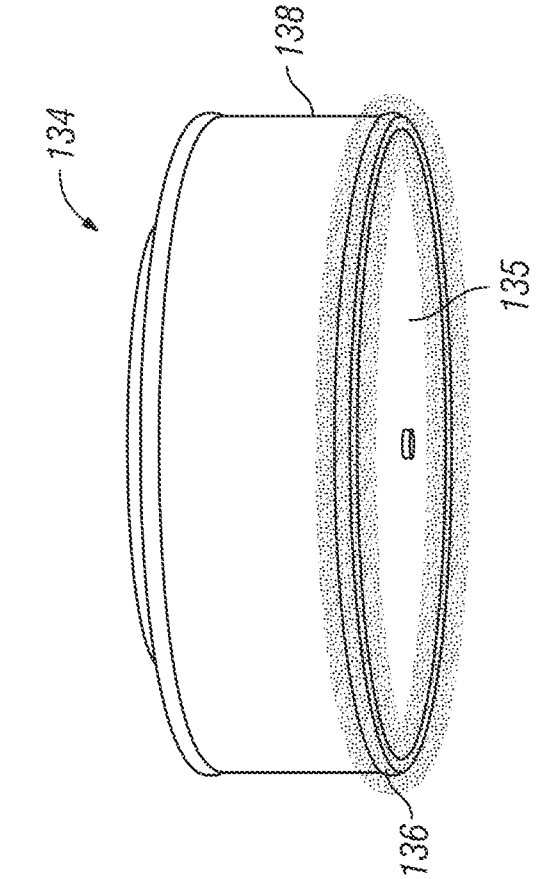

FIG. 7B

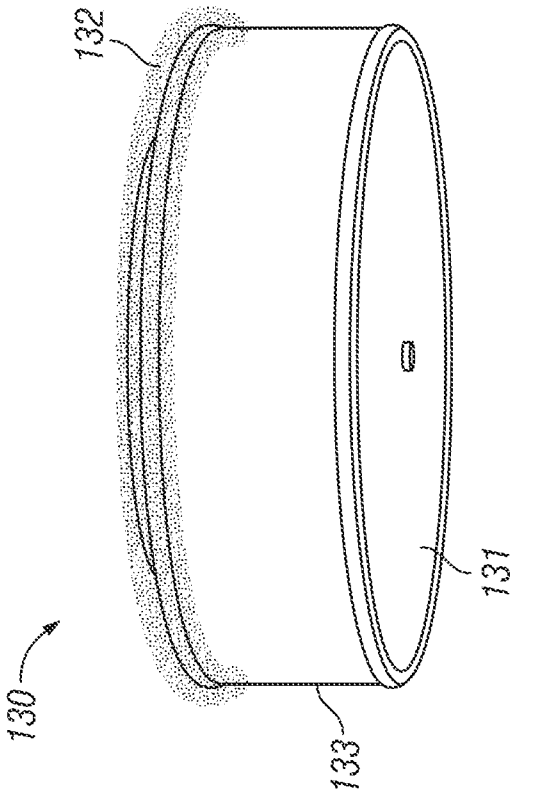

FIG. 7A

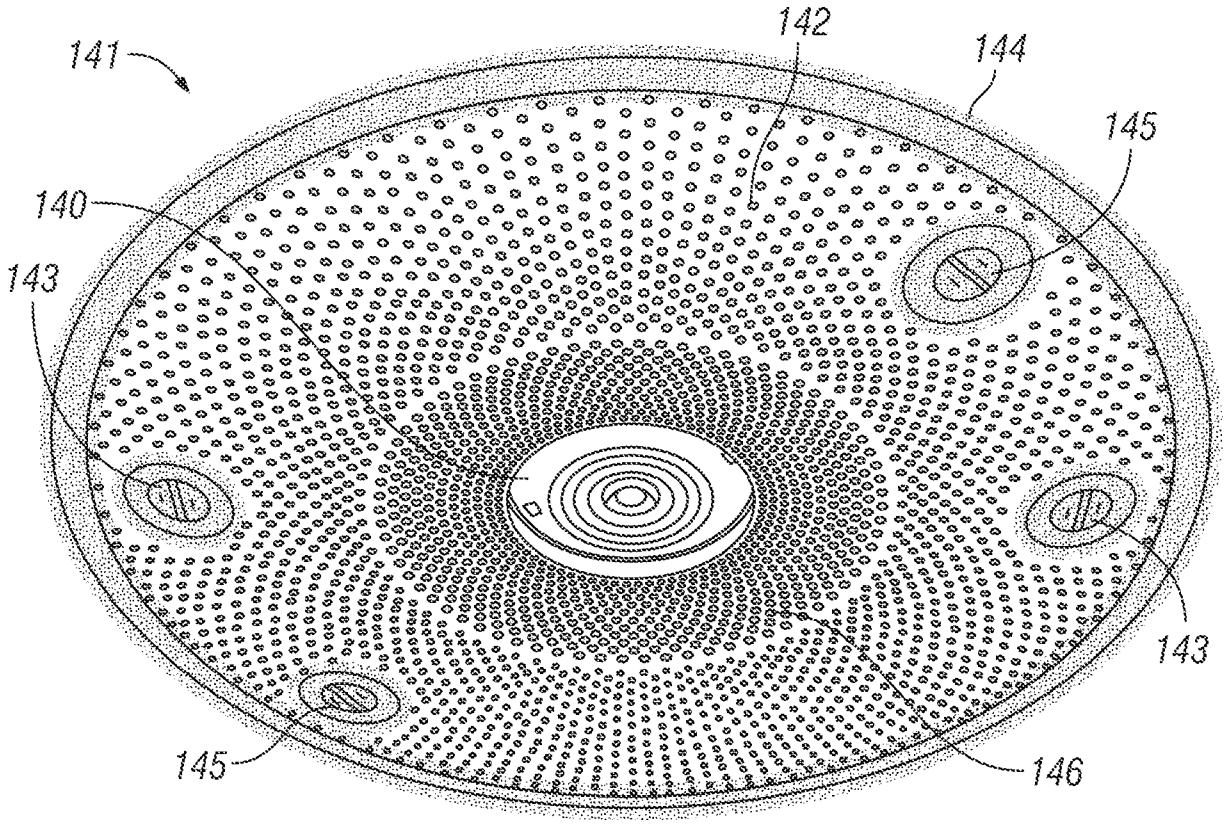

FIG. 8

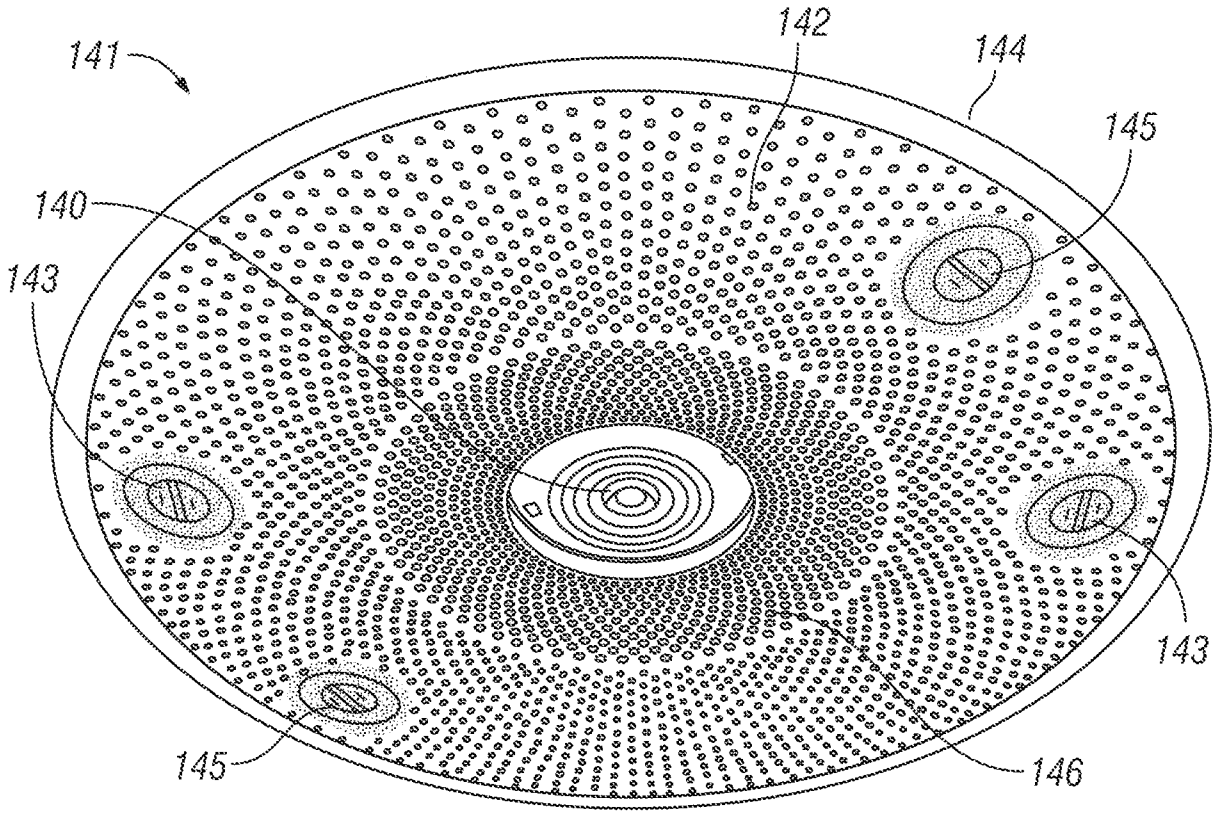
141
142
144
145
140
143
143
145
146

FIG. 9A

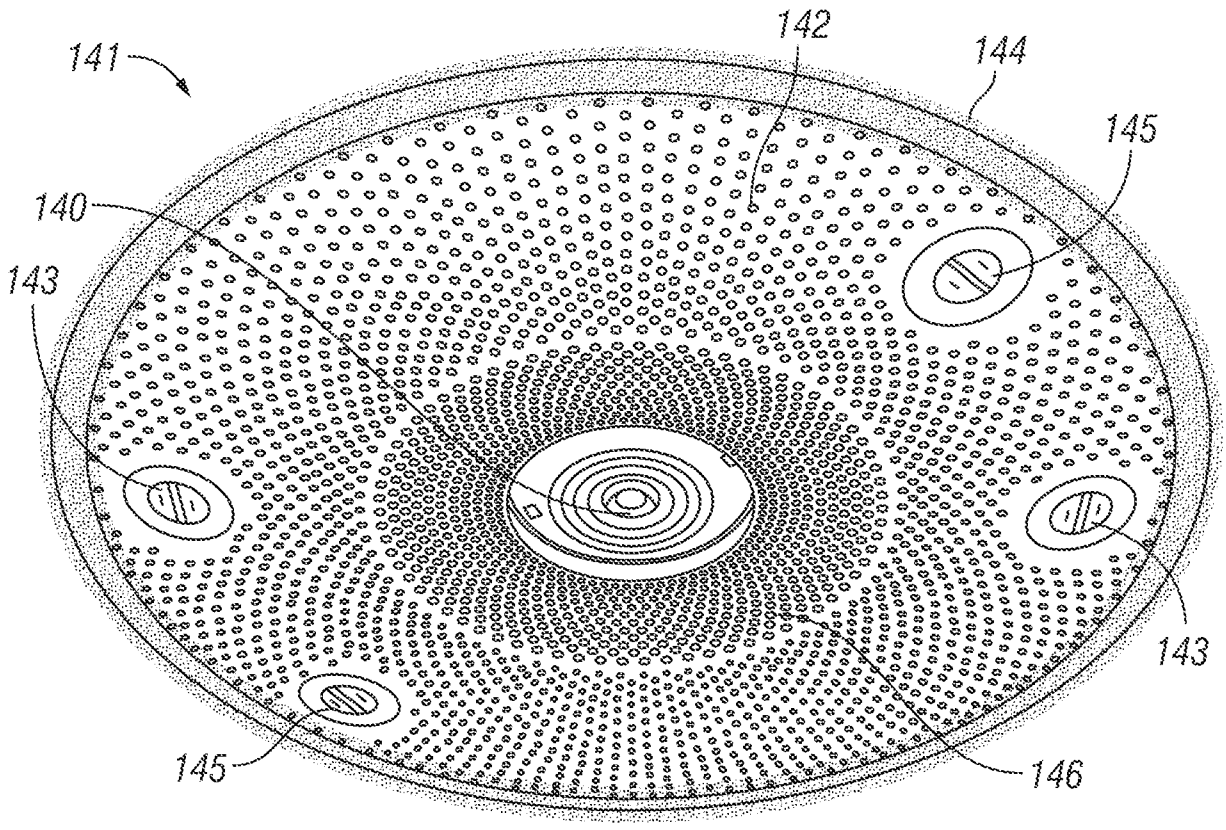
141
142
144
145
140
143
143
145
146

FIG. 9B

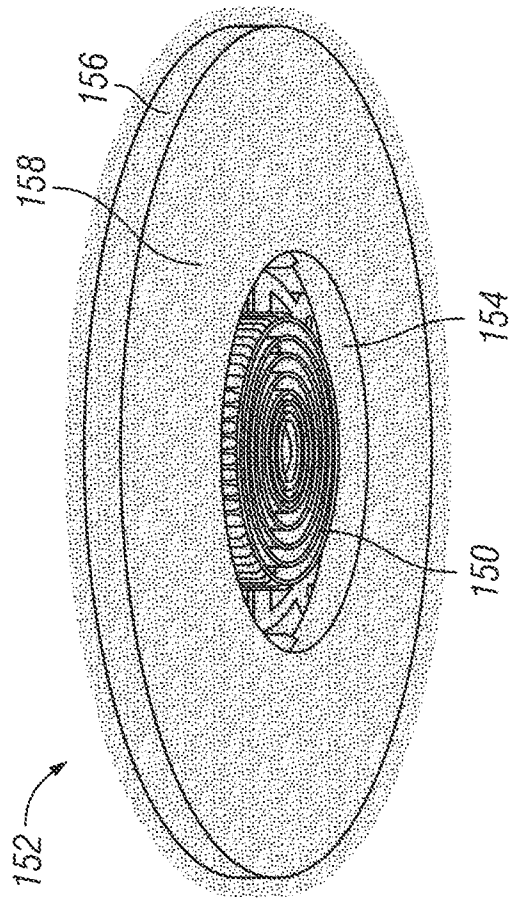

FIG. 10B

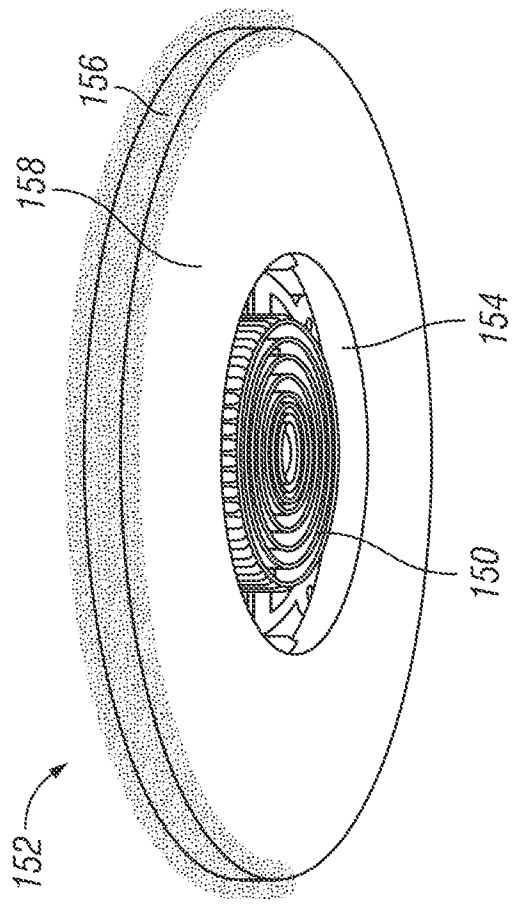

FIG. 10A

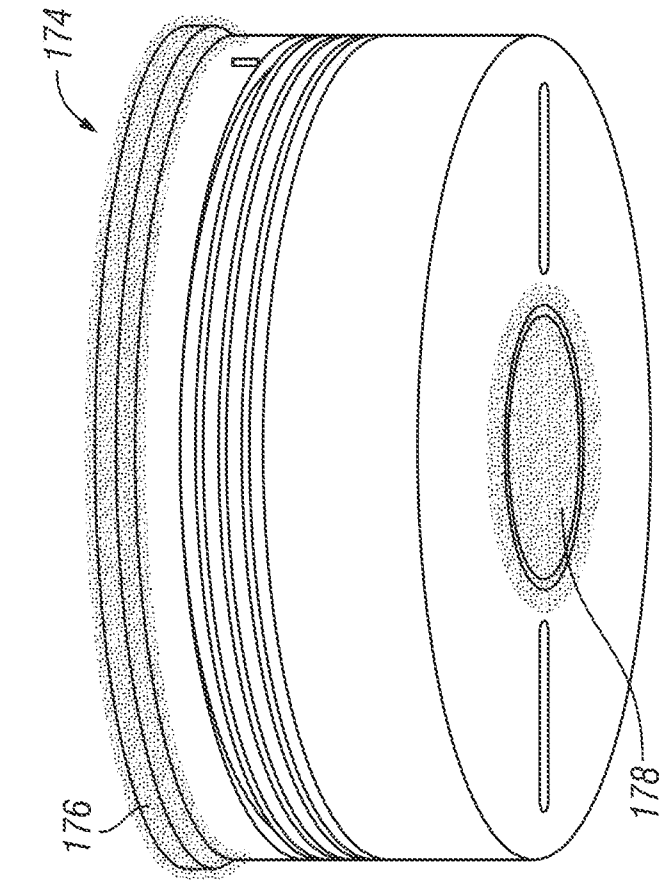

FIG. 11B

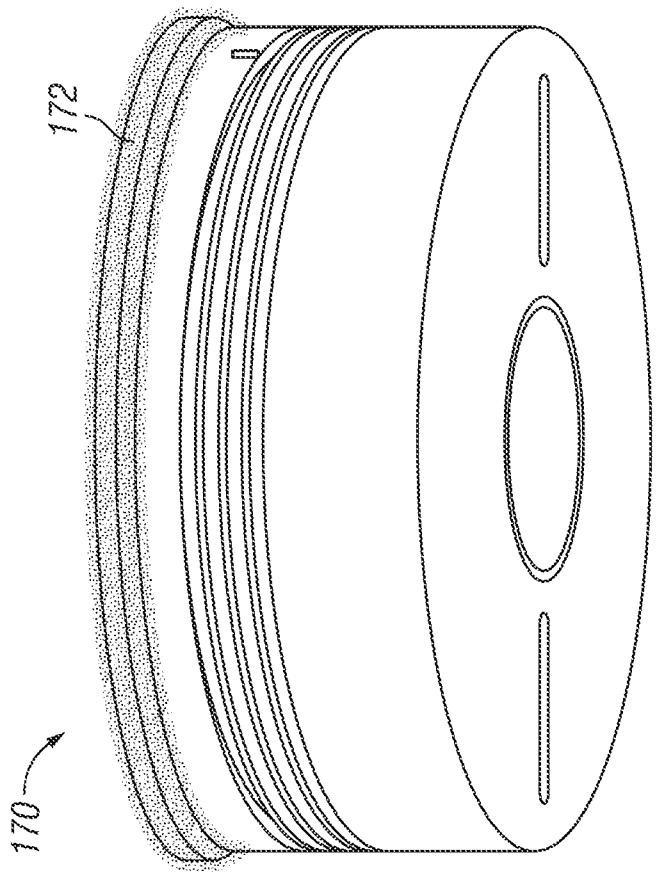

FIG. 11A

INTERNATIONAL SEARCH REPORT

International application No.

PCT/US 2021/030568

A. CLASSIFICATION OF SUBJECT MATTER

H01R 24/38 *(2011.01)*
H01R 33/00 *(2006.01)*
F21V 21/02 *(2006.01)*
A61L 2/08 *(2006.01)*
A61L 9/18 *(2006.01)*

According to International Patent Classification (IPC) or to both national classification and IPC

B. FIELDS SEARCHED

Minimum documentation searched (classification system followed by classification symbols)

H01R 24/00-24/38, 33/00-33/945, F21V 21/00-21/08, A61L 2/00- 2/08, 9/00-9/18

Documentation searched other than minimum documentation to the extent that such documents are included in the fields searched

Electronic data base consulted during the international search (name of data base and, where practicable, search terms used)

PatSearch (RUPTO internal), USPTO, PAJ, Esp@cenet, DWPI, EAPATIS, PATENTSCOPE

C. DOCUMENTS CONSIDERED TO BE RELEVANT

Category*	Citation of document, with indication, where appropriate, of the relevant passages	Relevant to claim No.
X Y	US 2019/224350 A1 (KENALL MFG CO) 25.07.2019, fig. 4A-4D, 7, 9D, [0005]-[0006], [0057]-[0062], [0069], [0070], [0085]-[0086]	31-32 1-30
Y	US 2020/018469 A1 (KOHEN RAN ROLAND) 16.01.2020, fig.1-3, 6, [0002]-[0009], [006]7, [0073],[0078], [0088], [0091]	1-30
A	US 2018/169279 A1 (UNIV COLUMBIA) 21.06.2018	1-32
A	WO 2020/039215 A1 (LUXVICI LTD) 27.02.2020	1-32

☐ Further documents are listed in the continuation of Box C.

☐ See patent family annex.

* Special categories of cited documents:

"A" document defining the general state of the art which is not considered to be of particular relevance

"D" document cited by the applicant in the international application

"E" earlier document but published on or after the international filing date

"L" document which may throw doubts on priority claim(s) or which is cited to establish the publication date of another citation or other special reason (as specified)

"O" document referring to an oral disclosure, use, exhibition or other means

"P" document published prior to the international filing date but later than the priority date claimed

"T" later document published after the international filing date or priority date and not in conflict with the application but cited to understand the principle or theory underlying the invention

"X" document of particular relevance; the claimed invention cannot be considered novel or cannot be considered to involve an inventive step when the document is taken alone

"Y" document of particular relevance; the claimed invention cannot be considered to involve an inventive step when the document is combined with one or more other such documents, such combination being obvious to a person skilled in the art

"&" document member of the same patent family

Date of the actual completion of the international search	Date of mailing of the international search report
04 August 2021 (04.08.2021)	12 August 2021 (12.08.2021)
Name and mailing address of the ISA/RU: Federal Institute of Industrial Property, Berezhkovskaya nab., 30-1, Moscow, G-59, GSP-3, Russia, 125993 Facsimile No: (8-495) 531-63-18, (8-499) 243-33-37	Authorized officer G. Tarakanova Telephone No. 8 499 240 25 91