(12) INTERNATIONAL APPLICATION PUBLISHED UNDER THE PATENT COOPERATION TREATY (PCT)

(19) World Intellectual Property Organization
International Bureau

(43) International Publication Date
12 March 2015 (12.03.2015)

WIPO | PCT

(10) International Publication Number
WO 2015/034324 A1

(51) International Patent Classification:
F21S 2/00 (2006.01) *F21V 29/00* (2015.01)
F21V 17/00 (2006.01) *F21W 131/105* (2006.01)

(21) International Application Number:
PCT/KR2014/008416

(22) International Filing Date:
5 September 2014 (05.09.2014)

(25) Filing Language: English

(26) Publication Language: English

(30) Priority Data:
10-2013-0107477
6 September 2013 (06.09.2013) KR
10-2014-0031532 18 March 2014 (18.03.2014) KR

(71) Applicant: **KMW INC.** [KR/KR]; 183-6, Yeongcheon-ro, Dongtan-myeon, Hwaseong-si, Gyeonggi-do 445-813 (KR).

(72) Inventors: **KIM, Duk-Yong**; 25, Giheungdanji-ro 136-gil, Giheung-gu, Youngin-si, Gyeonggi-do 446-901 (KR). **KIM, Hyun-Ki**; #106-1501, 421, Sangdo-ro, Dongjak-gu, Seoul 156-781 (KR). **ROH, Dong-Sik**; #102-1305, Samho Hansup APT., 34, Seonyu-ro 47-gil, Yeongdeungpo-gu, Seoul 150-104 (KR).

(74) Agents: **LEE, Keon-Joo** et al.; Mihwa Bldg., 16 Daehak-ro 9-gil, Chongro-gu, Seoul 110-524 (KR).

(81) Designated States *(unless otherwise indicated, for every kind of national protection available)*: AE, AG, AL, AM, AO, AT, AU, AZ, BA, BB, BG, BH, BN, BR, BW, BY, BZ, CA, CH, CL, CN, CO, CR, CU, CZ, DE, DK, DM, DO, DZ, EC, EE, EG, ES, FI, GB, GD, GE, GH, GM, GT, HN, HR, HU, ID, IL, IN, IR, IS, JP, KE, KG, KN, KP, KZ, LA, LC, LK, LR, LS, LU, LY, MA, MD, ME, MG, MK, MN, MW, MX, MY, MZ, NA, NG, NI, NO, NZ, OM, PA, PE, PG, PH, PL, PT, QA, RO, RS, RU, RW, SA, SC, SD, SE, SG, SK, SL, SM, ST, SV, SY, TH, TJ, TM, TN, TR, TT, TZ, UA, UG, US, UZ, VC, VN, ZA, ZM, ZW.

(84) Designated States *(unless otherwise indicated, for every kind of regional protection available)*: ARIPO (BW, GH, GM, KE, LR, LS, MW, MZ, NA, RW, SD, SL, ST, SZ,

[Continued on next page]

(54) Title: HIGH POWER LED LIGHTING DEVICE

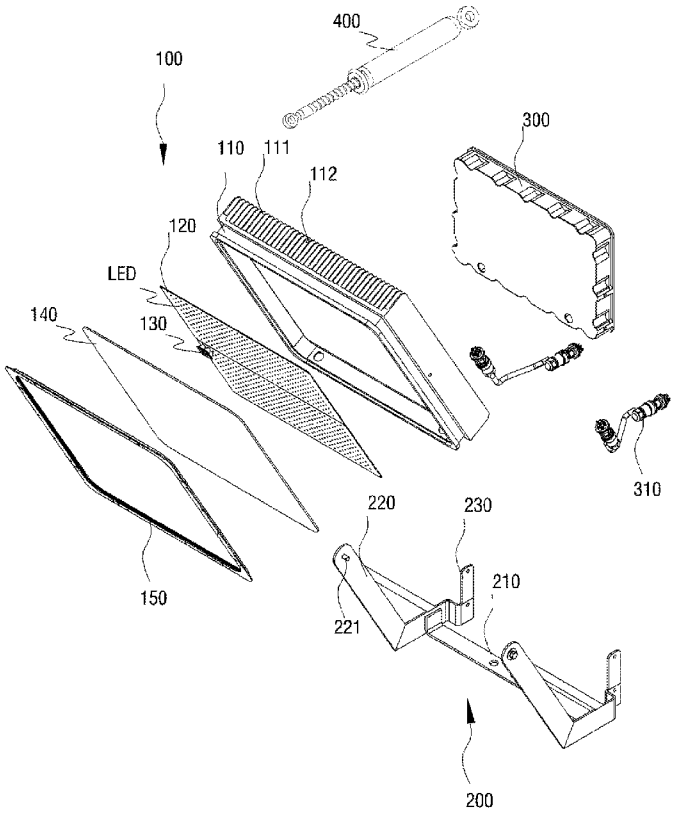

(57) Abstract: A high power LED lighting device is provided that includes a case, a substrate disposed in the case and including a plurality of LED chips are mounted thereon, and a reflection module connected to the substrate and including a plurality of light reflection semi-spheres protruding from a plate body. The device provides improved heat discharging properties, among others.

WO 2015/034324 A1

TZ, UG, ZM, ZW), Eurasian (AM, AZ, BY, KG, KZ, RU, TJ, TM), European (AL, AT, BE, BG, CH, CY, CZ, DE, DK, EE, ES, FI, FR, GB, GR, HR, HU, IE, IS, IT, LT, LU, LV, MC, MK, MT, NL, NO, PL, PT, RO, RS, SE, SI, SK, SM, TR), OAPI (BF, BJ, CF, CG, CI, CM, GA, GN, GQ, GW, KM, ML, MR, NE, SN, TD, TG).

Published:

— *with international search report (Art. 21(3))*

Description

Title of Invention: HIGH POWER LED LIGHTING DEVICE

Technical Field

[1] The present invention relates to a high power light emitting diode (LED) lighting device, and more particularly to a high power LED lighting device capable of lighting a wide area.

Background Art

[2] Generally, an outdoor stadium such as a baseball field, a football field, sports complex and the like has lighting towers. The light tower is required to produce a relatively high output to light a playing field during a match, and consumes substantial amounts of electric power. Recently, technologies using LED lighting have been developed to reduce electric power consumption for the lighting of playing fields or similar areas.

Disclosure of Invention

Technical Problem

[3] A recently developed device in the related art includes a floodlight for a playing field that uses an LED lamp. The LED floodlight has a structure with a lens assembled with each LED. However, although an LED chip of about 1 watt is used for a high power LED lighting device requiring an output equal to or greater than about 800 watts, at least 840 LED chips must be used in the LED lighting device in consideration of a loss of light. Accordingly, the time required to couple a lens to each LED substantially increases which thus decreases productivity.

[4] Further, a structure of adjusting an angle of the floodlight was developed, in which an angle of the floodlight is adjusted upwardly and downwardly and then a hinge is tightened and secured by a bolt. However, a coupling force acts on the floodlight to change the adjusted angle of the floodlight when the bolt is tightened, resulting in a deviation from a desired angle change.

[5] In addition, although a high power LED lighting device is designed considering a weight and a volume of the LED lighting device, generally, the high power LED lighting device usually has a predetermined area since it is substituted for a conventional lighting device instead of being built specifically for an LED lighting device. As described above, at least 840 LED chips must be used to implement the high power LED lighting device with a capability of about 800 watts, and a reflector must protrude at a sufficient height from a light emitting surface of the LED chips to reflect lights emitted from all LED chips to form a desired light distribution. This causes an increase in weight and volume of the high power LED lighting device.

Solution to Problem

[6] The present invention provides a high power LED lighting device that may reduce assembling time to improve productivity. Additionally, the present invention provides a high power LED light device in which another heat source may be separated from the LED lighting device to enhance durability of the LED lighting device and also the heat source and the LED lighting device may be individually changed. The present invention also provides a high power LED lighting device having a reduced volume and weight. Also, the present invention provides a high power LED lighting device of which a light emitting angle may be adjusted when necessary without causing a deviation from a desired angle change after the angle is adjusted.

[7] A high power LED lighting device in accordance with an aspect of the present invention may include a case, a substrate disposed in the case and including a plurality of LED chips are mounted thereon, and a reflection module connected to the substrate and including a plurality of light reflection semi-spheres protruding from a plate body. The case may include a plurality of heat radiation fins on a surface thereof. The high power LED lighting device may further comprise an electric power supplying unit connected to the case by a connector such that at least a portion of the electric power supplying unit is spaced apart from at least a portion of the case. The connector may be made of a material having a lower thermal conductivity that that of the electrical supplying unit. Preferably, the electric power supplying unit may include a plurality of heat radiation fins on a surface thereof. The high power LED lighting device may further comprise an angle adjustment unit including at least one hinge, an end of the angle adjustment unit being connected to the case and another end thereof being connected to the electric power supplying unit, wherein an angle of the lighting unit is adjusted by action of the at least one hinge. In some embodiments, the light reflection semi-spheres may be disposed to correspond to the LED chips one on one.

[8] A high power LED lighting device in accordance with another aspect of the present invention may include a case, a substrate disposed on an inner surface of the case, and a reflection module connected to the substrate. The substrate may include a plurality of LED chips mounted and spaced apart by a predetermined distance from each other in a row direction, a column direction, or both on the substrate. The reflection module may include a plurality of light reflection semi-spheres to reflect light emitted from the LED chips to achieve a predetermined light distribution.

[9] High power LED lighting devices according to this and other embodiments of the present invention have various advantages, including, but not limited to, improved assembling and/or repairing operation, improved heat discharging properties, improved manufacturing efficiency and productivity, and improved reliability and convenience.

Advantageous Effects of Invention

[10] High power LED lighting devices according to the above-described embodiments of the present invention have various advantages. For example, compared to prior art high power LED lighting devices, assembling operation is easier, volume and weight are smaller, heat discharging efficiency is greater, performance is more reliable, maintenance is easier, and an angle deviation can be more easily avoided, among others.

Brief Description of Drawings

[11] The above and other aspects, features, and advantages of the present invention will be more apparent from the following detailed description taken in conjunction with the accompanying drawings, in which:

[12] FIG. 1 is a perspective view illustrating a dissembled state of a high power LED lighting device according to an exemplary embodiment of the present invention;

[13] FIG. 2 is a sectional view illustrating an assembled state of the high power LED lighting device of FIG. 1;

[14] FIG. 3 illustrates a reflection module mounted on a front surface of a substrate of the high power LED lighting device of FIG. 1;

[15] FIG. 4 is a perspective view illustrating a reflection module that can be applied to a high power LED lighting device according to an exemplary embodiment of the present invention;

[16] FIGS. 5a-5b illustrate a conventional reflection plate and a reflection module according to an embodiment of the present invention, respectively;

[17] FIGS. 6 to 8 are perspective, rear, and front views of a high power LED lighting device according to another exemplary embodiment of the present invention, respectively; and

[18] FIGS. 9 to 10 are rear and perspective views of a high power LED lighting device according to still another exemplary embodiment of the present invention, respectively.

Best Mode for Carrying out the Invention

[19] The terminology used herein is for the purpose of describing particular embodiments only and is not intended to be limiting of the invention. As used herein, the singular forms “a”, “an” and “the” are intended to include the plural forms as well, unless the context clearly indicates otherwise. It will be further understood that the terms “comprises” and/or “comprising,” when used in this specification, specify the presence of stated features, integers, steps, operations, elements, and/or components, but do not preclude the presence or addition of one or more other features, integers, steps, operations, elements, components, and/or groups thereof. As used herein, the term “and/or” includes any and all combinations of one or more of the associated listed

items.

[20] Unless specifically stated or obvious from context, as used herein, the term "about" is understood as within a range of normal tolerance in the art, for example within 2 standard deviations of the mean. "About" can be understood as within 10%, 9%, 8%, 7%, 6%, 5%, 4%, 3%, 2%, 1%, 0.5%, 0.1%, 0.05%, or 0.01% of the stated value. Unless otherwise clear from the context, all numerical values provided herein are modified by the term "about."

[21] Hereinafter, high power LED lighting devices according to embodiments of the present invention will be described in detail with reference to the accompanying drawings.

[22] FIG. 1 is a perspective view illustrating a dissembled state of a high power LED lighting device according to an exemplary embodiment of the present invention and FIG. 2 is a sectional view illustrating an assembled state of the high power LED lighting device. Referring to FIGS. 1 and 2, the high power LED lighting device according to the exemplary embodiment of the present invention includes a lighting unit 100. It may further include a supporting frame 200, an electric power supplying unit 300, and an angle adjustment unit 400. The lighting unit 100 includes a plurality of LED chips that can produce a desired output (e.g., about 400 watts, 800 watts, 1200 watts, etc.). The supporting frame 200 is connected to the lighting unit 100 for adjusting an angle of the lighting unit 100. The electric power supplying unit 300 for converting an alternate current into a direct current to be supplied to the lighting unit 100 is connected to the supporting frame 200 such that at least a portion of the electric power supplying unit 300 is spaced apart from at least a portion of the lighting unit 100. An end of the angle adjustment unit 400 may be hingedly or non-hingedly connected to the lighting unit 100 and the other end of the angle adjustment unit 400 may be hingedly or non-hingedly connected to the electric power supplying unit 300 such that the angle of the lighting unit 100 with respect to a ground surface can be changed.

[23] The lighting unit 100 includes a case 110, a substrate 120, and reflection modules 130. The LED chips are arranged and spaced apart by about an equal distance from each other on the substrate 120. The case 110 receives the substrate 120 in/on an inner side thereof. The case 110 may, preferably, have a plurality of heat radiation fins 111 on a surface thereof. The reflection modules 130 may be mounted on the substrate 120 to reflect and distribute light emitted from each of the LED chips. The lighting unit 100 may further include a cover 140 configured to cover an outer surface of the reflection modules 130. A reference numeral 150 denotes a frame configured to fix the cover 140, and a reference numeral 310 indicates a wire connector between the electric power supplying unit 300 and the substrate 120 (and/or the case 110).

[24] Referring to FIGS. 3 and 4, multiple LED chips (e.g., 840 1-watt LED chips, 1680 0.5-watt LED chips, etc.) may be arranged and spaced apart by about an equal distance from each other on the substrate 120. When the LED chips are arranged and spaced apart by about an equal distance, an operation of mounting the LED chips on the substrate 120 may be facilitated and a design for mounting the reflection modules 130 may be simplified. In particular, the substantially equal distance arrangement of the LED chips makes the LED chips spaced apart from each other maximally, thereby increasing the effect on heat radiation (discharging) performance.

[25] At least one coupling protrusion 113 protrudes from a surface of the case 110. At least one coupling aperture 132 is defined in the reflection module 130. At least one connection hole (not shown) is defined in the substrate 120 at positions corresponding to the coupling holes 132. The coupling protrusion(s) 113 extends through the connection hole(s)) formed in the substrate 120 and is inserted into the coupling aperture(s) 132 formed in the reflection module 130. In this state, for example, a fastening mechanism (e.g., a coupling a bolt) may be used to couple the reflection module 130 to the substrate 120.

[26] Each reflection module 130 may, preferably, include at least two light reflection semi-spheres 131 arranged in row and/or column directions (e.g., 1x2, 2x1, 1x3, 2x2, 3x1, 1x4, 2x3, 3x2, 4x1, 1x5, 2x4, 3x3, 4x2, 5x1, etc.). The number and size of light reflection semi-spheres disposed in one reflection module 130 may be appropriately determined depending on desired design specifications and/or customer needs. For example, in case of a 2x2 reflection module as shown in FIG. 4, four light reflection semi-spheres 131 configured to reflect light emitted from four LED chips may be simultaneously mounted, thus being able to simplify assembling operation. A light reflection semi-sphere 131 may correspond to one or more LED chips. The depth of a light reflection semi-sphere 131 and the curvature of an inner surface of the light reflection semi-sphere 131 may be appropriately set to produce a desired light distribution, depending on desired design specifications and/or customer needs. Further, luminous flux reflected and discharged by one light reflection semi-sphere 131 may be appropriately set (e.g., to be about 101m) depending on desired design specifications and/or customer needs.

[27] FIGS. 5a and 5b illustrate a conventional reflection plate and a reflection module according to an embodiment of the present invention, respectively. As shown in FIG. 5a, in a conventional LED lighting device using a conventional reflection plate, in which a plurality of LED chips are mounted on a substrate and a reflection unit R is formed at edges of the substrate, the height h1 of the reflection unit must be great enough to obtain a desired light distribution. In particular, since an emitting angle of light emitted through a light emitting surface of LED chips placed at about a center of

the substrate among the plural LED chips is about 120 degrees, the reflection unit R may not reflect the light emitted from the LED chips placed at about the center of the substrate when the height of the reflection unit R is insufficient, or may not form a desired light distribution. On the other hand, as shown in FIG. 5b according to an exemplary embodiment of the present invention, the reflection module 130 has the light reflection semi-spheres 131 that correspond to the plurality of LED chips (here, one on one), the respective light reflection semi-spheres 131 may reflect light emitted from respective LED chips and form a desired light distribution. Accordingly, the height h2 of the reflection module 130 may be smaller than the height h1 of the reflection unit R. The above mentioned structure of the reflection module may decrease the volume and weight of the high power LED lighting device and reduce a manufacturing cost.

[28] The light reflection semi-spheres 131 with a predetermined height may, preferably, be formed integrally with and protrude from a plate-shaped body 134, allowing the weight of the reflection module 130 to be reduced in comparison with a single light reflection sphere formed on a structure of a hexahedron. The reduction of the weight of the reflection module 130 allows facilitation of an operation of coupling the reflection module 130 to the substrate 120, and in addition results in a reduction of the lighting device to facilitate the transportation and mounting of the lighting device.

[29] As described above, a plurality of the reflection modules 130 may be arranged on a surface (e.g., a front surface) of the substrate 120, and then the cover 140 may be fixed to a front surface of the case 110 to assemble the lighting unit 100. The cover 140 may be made of a transparent sheet to minimize the loss of light and prevent an introduction of a foreign substance (e.g., dust, etc.).

[30] A plurality of the heat radiation fins 111 may, preferably, be arranged on another surface (e.g., a rear surface) of the case 110. The number, shape, and position of the heat radiation fins 111 may be appropriately determined depending on desired design specifications and/or customer needs. For example, the heat radiation fins 111 may be formed horizontally, diagonally, vertically, or a combination thereof on a rear surface of the case 10.

[31] The lighting unit 100 may be rotatably connected to the supporting frame 200. An end of the supporting frame 200 may be hingedly or non-hingedly connected to the lighting unit 100 and another end of the supporting frame 200 may be hingedly or non-hingedly connected to the electric power supplying unit 300. Alternatively, the supporting frame 200 may include a lighting unit fixing frame 220, an electric power supplying unit fixing frame 230, and a base frame 210 between the lighting unit fixing frame 220 and the electric power supplying unit fixing frame 230. The lighting unit fixing frame 220 may extend at a predetermined angle from at least a portion of the

base frame 210 to at least a portion of the lighting unit 100. The power supplying unit fixing frame 230 may extend at a predetermined angle from at least a portion of the base frame 210 to at least a portion of the electric power supplying unit 30.

[32] The electric power supplying unit 300 is configured to convert an alternate current into a direct current and supply the direct current to the lighting unit 100. Since heat can be generated by the electric power supplying unit 300, at least a portion of the electric power supplying unit 300 may, suitably, be disposed to be spaced from at least a portion of the lighting unit 100 to prevent the generated heat from being transferred to the lighting unit 100. As such, heat generated by the lighting unit 100 may be prevented from being transferred to the electric power supplying unit 300 and heat generated by the electric power supplying unit 300 may be prevented from being transferred to the lighting unit 100, thereby preventing damage of the LED lighting device due to heat or degradation of the durability thereof.

[33] If both the electric power supplying unit 300 and the lighting unit 100 are disposed in a case, the electric power supplying unit 300 must be separated from the case to be substituted with a new one, which is inconvenient. On the other hand, according to the present invention, since the electric power supplying unit 300 is disposed separately from the lighting unit 100 disposed in the case 110 and/or since the electric power supplying unit 300 is mounted independently on the exterior, it is possible to facilitate the substitution of the electric power supplying unit 300. More specifically, the electric power supplying unit 300 may be separated from the power supplying unit fixing frame 230 and a new power supplying unit 300 may be mounted on the LED lighting device, thereby being able to more easily complete a maintenance operation.

[34] The angle adjustment unit 400 may include at least one hinge. An end of the angle adjustment unit may be hingedly or non-hingedly connected to at least a portion of the lighting unit and another end thereof may be hingedly or non-hingedly connected to at least a portion of the electric power supplying unit. The angle of the lighting unit (e.g., with respect to a ground surface) may be adjusted by action of the at least one hinge.

[35] In a modified embodiment, a first end of the angle adjustment unit 400 may be hingedly or non-hingedly connected to at least one of the heat radiation fins 111 of the lighting unit 100 or at least a portion of the case 110. A second end of the angle adjustment unit 400 may be hingedly or non-hingedly connected to at least one of the heat radiation fins provided to the electric power supplying unit 300 or at least a portion of the electric power supplying unit 300.

[36] In some embodiments, the angle adjustment unit 400 may include a screw 410, a receiving part 420 configured to receive the screw 410, and a rotation controller 430 configured to rotate in an idle manner and mounted at a position adjacent to the screw 410. When the rotation controller 430 is rotated, the screw 410 may be received in or

withdrawn from the receiving part 420 to increase or decrease an exposed portion of the screw.

[37] To adjust the angle of the lighting unit 100 (with respect to a ground surface) using the angle adjustment unit 400, a bolt 221 of the lighting unit fixing frame 220 may be loosened to allow the lighting unit 100 to be rotatable around a coupling position of the bolt 221.

[38] Thereafter, the rotation controller 430 is rotated to move the screw 410. The angle of the lighting unit 100 may be adjusted in accordance with the length of the screw exposed to exterior of the receiving part 430. The length of the screw exposed to exterior of the receiving part 430 increases or decreases according to the rotation direction and degree of the rotation controller 430. It is possible to calculate the length of the screw 410 adjusted per one rotation of the rotation controller 430. Thus, operators may adjust the angle of the lighting unit 100 to a desired angle.

[39] After adjusting the angle of the lighting unit 100 to a desired angle as described above, the bolt 221 may be tightened to fix the lighting unit 100 to the lighting unit fixing frame 220. When the bolt 221 is securely tightened so that the lighting unit is tightly fixed to the lighting unit fixing frame 220, since the lighting unit 100 is secured by a predetermined force of the angle adjustment unit 400, it is possible to prevent the angle of the lighting unit 100 from being deviated from a desired angle. Accordingly, the lighting unit 100 may be adjusted to a desired angle and maintained at the desired angle stably and reliably.

[40] One lighting unit 100 may have a pre-determined output (e.g., about 400 watts, 800 watts, etc.). In accordance with desired design specifications or customer needs, a plurality of the lighting units 100 may be assembled. For example, FIGS. 6 to 8 are perspective, rear, and front views of a high power LED lighting device according to another exemplary embodiment of the present invention, respectively. The high power LED lighting device according to this embodiment may include an electric power supplying unit 300 and a first and second lighting units 100 connected to at least a portion of the electric power supplying unit 300 by at least one connector 500. The high power LED lighting device may further include an angle adjustment unit 400 connected to a surface of the electric power supplying unit 300 to adjust the angle of the pair of the lighting unit 100 along with the electric power supplying unit 300. .

[41] In this embodiment, the first and second lighting units 100 may be independently mounted. The first and second lighting units 100 each may radiate heat through heat radiation fins provided on the respective cases as described above, it is possible to prevent the degradation of the durability of the LED chips caused by generated heat even when the LED lighting device is applied to the high power lighting device.

[42] Furthermore, since at least a portion of the lighting unit 100 and at least a portion of

the electric power supplying unit 300 are spaced at a sufficient distance from each other, heat transfer between the lighting unit 100 and the electric power supplying unit 300 may be prevented. In a modified embodiment, the at least one connector 500 that connects the lighting units 100 with the electric power supplying unit 300 may be made of a material with a substantially low thermal conductivity to minimize thermal transfer between the lighting unit 100 and the electric power supplying unit 300. In addition, since the angle adjustment unit 400 may include at least one hinge (e.g., a horizontal hinge 450, a vertical hinge 460, or a combination thereof), the angle (and height) of the electric power supplying unit 300 and the lighting unit 100 connected to the front surface of the electric power supplying unit 300 may be adjusted.

[43] FIGS. 9 to 10 are rear and perspective views of a high power LED lighting device according to still another exemplary embodiment of the present invention, respectively. The high power LED lighting device according to this embodiment includes four lighting units 100 connected by at least one connector 500 to at least a portion of the electric power supplying unit 300.

[44] The electronic power supplying unit 300 may, preferably, include the angle adjustment unit 400 on a surface thereof to adjust the angle of the lighting units 100. The angle adjustment unit 400 may include at least one hinge. A fixing frame 470 may be connected to the angle adjustment unit 400 to rigidly secure the LED lighting device to a fixture. Accordingly, the angle of the lighting units 100 can be adjusted before or after the LED lighting device is secured to a fixture.

[45] The electric power supplying unit 300 may further include a signal receiving device 480 configured to receive a dimming control signal from an exterior and adjust electric power supplied to the lighting unit(s) 100 based on the dimming control signal. Accordingly, it is possible to more easily perform the dimming control of the lighting unit(s) 100 at the exterior.

[46] Although the present invention has been described with reference to the exemplary embodiments, it is obvious to those skilled in the art to which the present invention belongs that the present invention is not limited to the exemplary embodiments, and may be variously varied and modified without departing from the scope of the present invention.

Claims

[Claim 1] A high power light emitting diode (LED) lighting device, comprising:
a case;
a substrate disposed on an inner surface of the case and including a plurality of LED chips mounted and spaced apart by a predetermined distance from each other in a row direction, a column direction, or both on the substrate; and
a reflection module connected to the substrate and including a plurality of light reflection semi-spheres to reflect light emitted from the LED chips to achieve a predetermined light distribution.

[Claim 2] The high power LED lighting device as claimed in claim 1, wherein the plurality of light reflection semi-spheres are protruded from a plate-shaped body.

[Claim 3] The high power LED lighting device as claimed in claim 2, wherein at least one coupling aperture is formed in the plate-shaped body and at least one coupling protrusion formed on the case such that the coupling protrusion or protrusions can be inserted into the coupling aperture or apertures.

[Claim 4] The high power LED lighting device as claimed in claim 1, wherein the case includes a plurality of heat radiation fins on a surface thereof.

[Claim 5] The high power LED lighting device as claimed in claim 1, further comprising:
a supporting frame configured to support the lighting unit; and
an electric power supplying unit supported by the supporting frame to be spaced apart from the lighting unit.

[Claim 6] The high power LED lighting device as claimed in claim 5, further comprising:
an angle adjustment unit including at least one hinge, an end of the angle adjustment unit being connected to the lighting unit and another end thereof being connected to the electric power supplying unit,
wherein an angle of the lighting unit is adjusted by action of the at least one hinge.

[Claim 7] The high power LED lighting device as claimed in claim 6, wherein the angle adjustment unit includes:
a screw having a first end coupled to the lighting unit;
a receiving part having a first end coupled to the electric power supplying unit and a second end configured to receive the screw; and

a rotation controller mounted on the second end of the receiving part to adjust an insertion and a withdrawal of the screw into and out of the receiving part while rotating in an idle state,
wherein the first end of the screw is coupled to the lighting unit by at least one hinge, the first end of the receiving part is coupled to the electric power supplying unit by at least one hinge, or both.

[Claim 8] The high power LED lighting device as claimed in claim 1, wherein the LED chips are spaced apart by about an equal distance from each other.

[Claim 9] The high power LED lighting device as claimed in claim 1, wherein the light reflection semi-spheres are disposed to correspond to the LED chips one on one.

[Claim 10] The high power LED lighting device as claimed in claim 9, wherein a luminous flux reflected and emitted by one light reflection semi-sphere is equal to or greater than about 101m.

[Claim 11] A high power LED lighting device, comprising:
a case;
a substrate disposed in the case and including a plurality of LED chips are mounted thereon; and
a reflection module connected to the substrate and including a plurality of light reflection semi-spheres protruding from a plate body.

[Claim 12] The high power LED lighting device as claimed in claim 11, wherein the case includes a plurality of heat radiation fins on a surface thereof.

[Claim 13] The high power LED lighting device as claimed in claim 11, further comprising an electric power supplying unit connected to the case by a connector such that at least a portion of the electric power supplying unit is spaced apart from at least a portion of the case.

[Claim 14] The high power LED lighting device as claimed in claim 13, wherein the connector is made of a material having a lower thermal conductivity that that of the electrical supplying unit.

[Claim 15] The high power LED lighting device as claimed in claim 13, wherein the electric power supplying unit includes a plurality of heat radiation fins on a surface thereof.

[Claim 16] The high power LED lighting device as claimed in claim 11, further comprising:
an angle adjustment unit including at least one hinge, an end of the angle adjustment unit being connected to the case and another end thereof being connected to the electric power supplying unit, wherein an angle of the lighting unit is adjusted by action of the at least one

hinge.

[Claim 17] The high power LED lighting device as claimed in claim 11, wherein the light reflection semi-spheres are disposed to correspond to the LED chips one on one.

[Fig. 1]

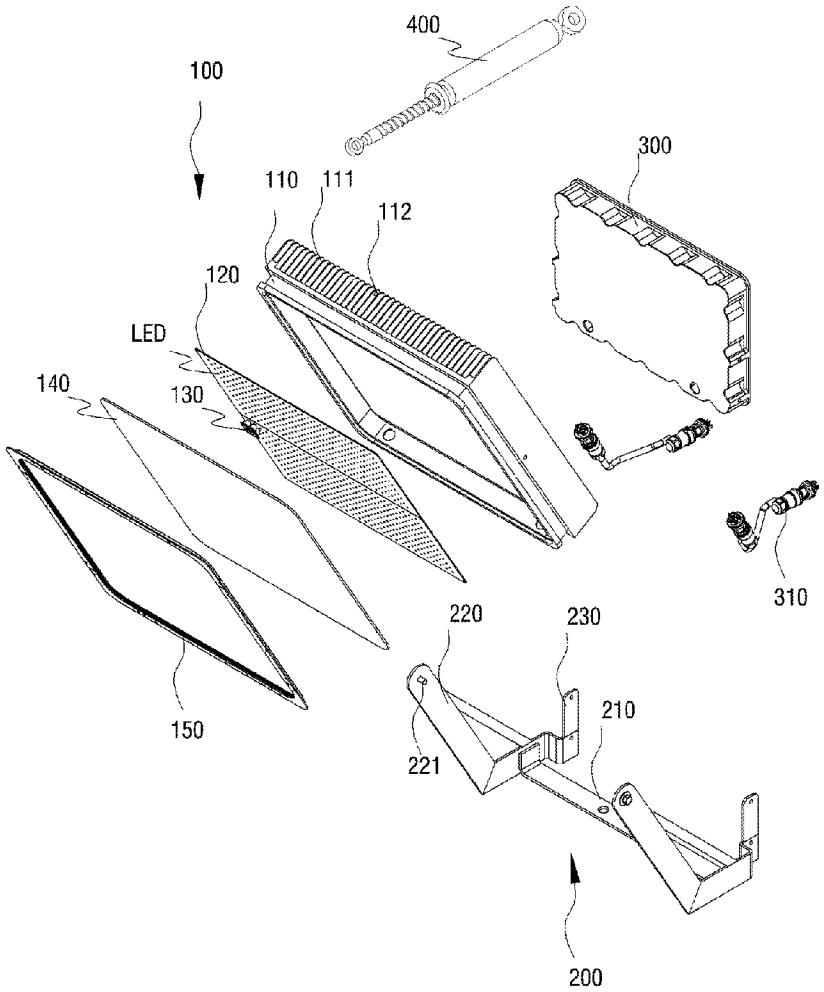
400
100
300
110
111
112
120
LED
140
130
310
220
230
210
150
221
200

[Fig. 2]

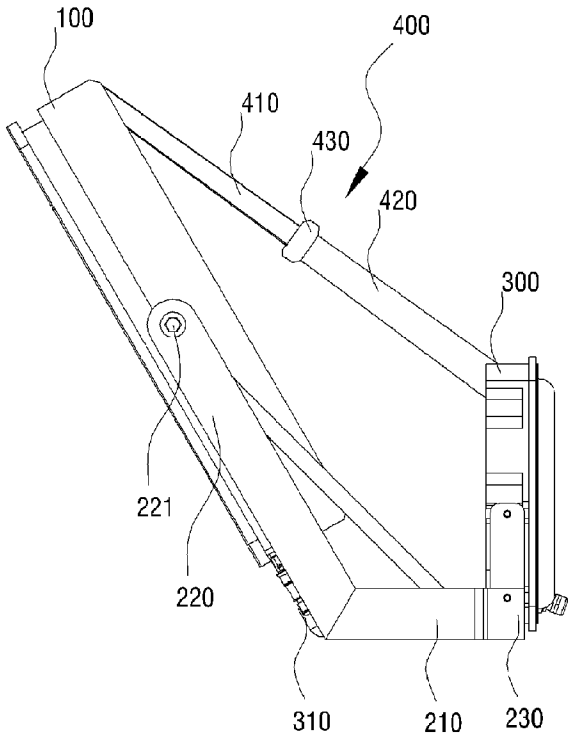
100
400
410
430
420
300
221
220
310
210
230

[Fig. 3]

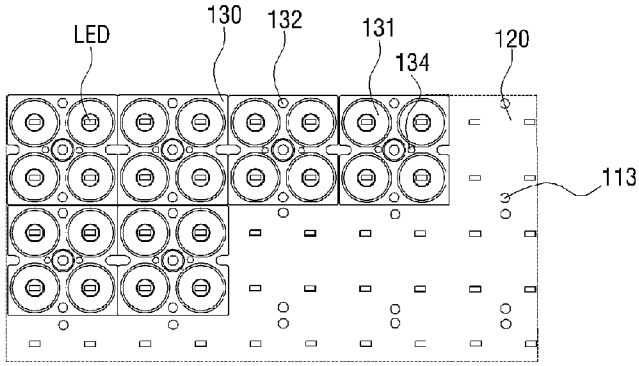

[Fig. 4]

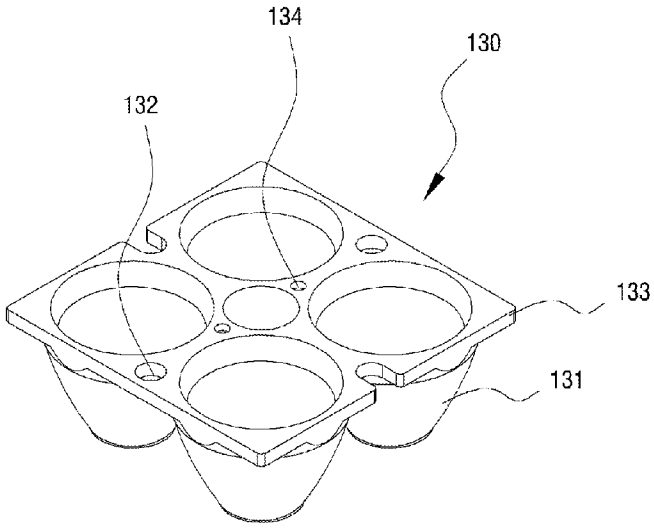

[Fig. 5a]

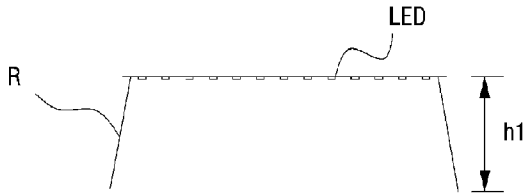

[Fig. 5b]

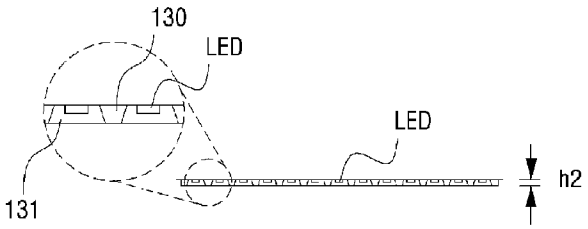

[Fig. 6]

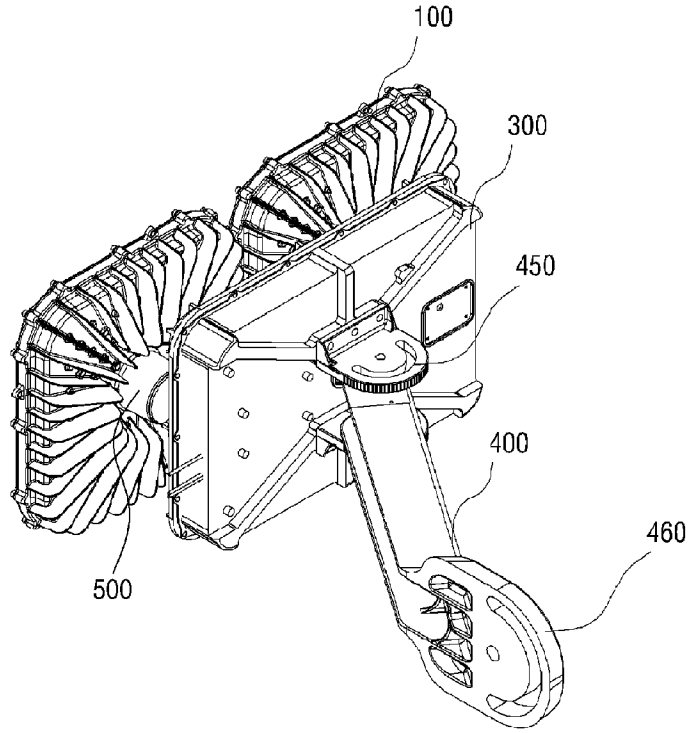

[Fig. 7]

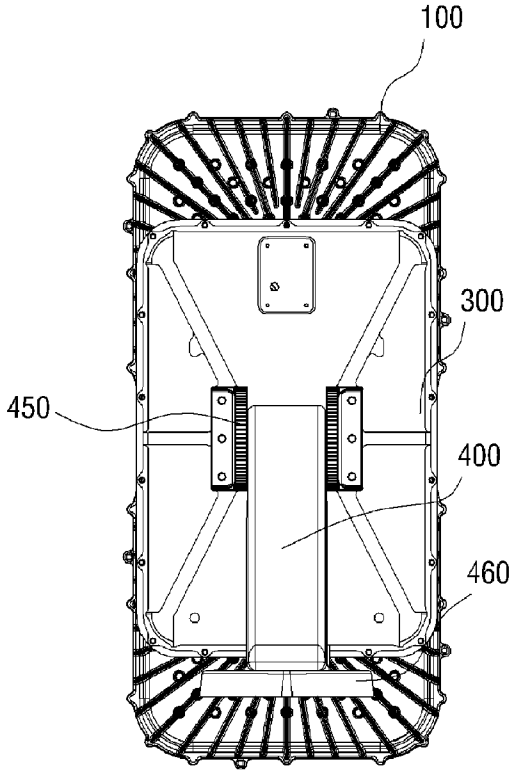

[Fig. 8]

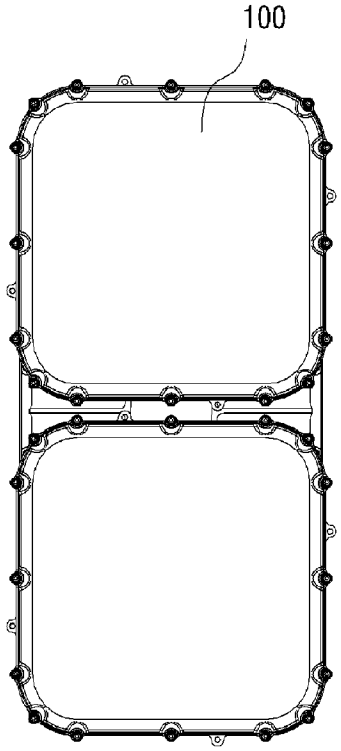

[Fig. 9]

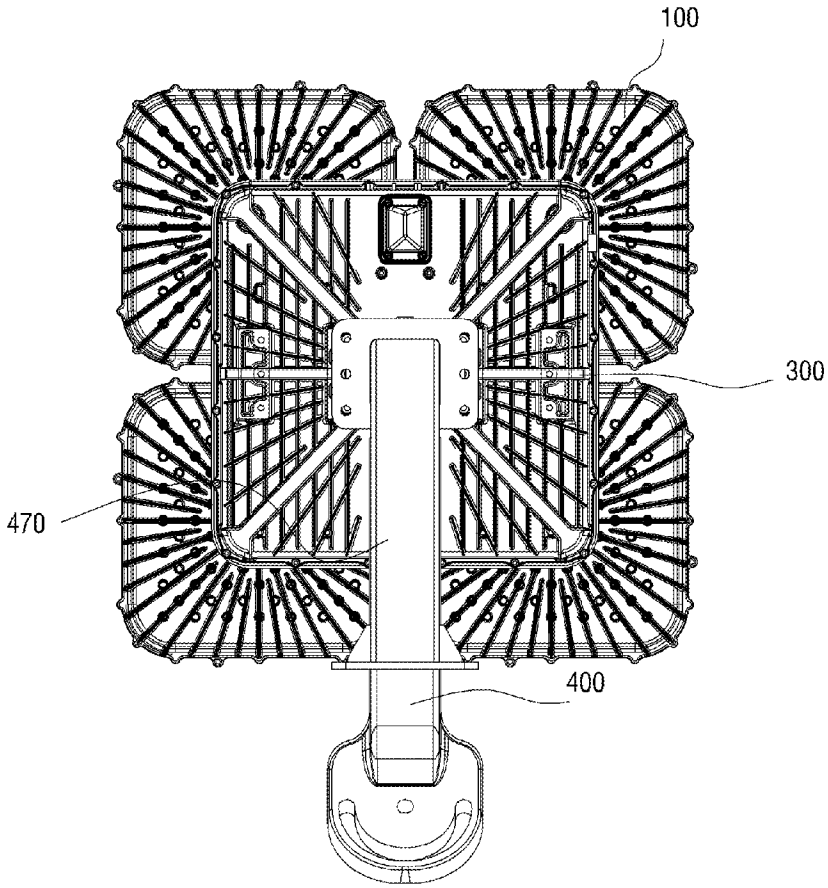

[Fig. 10]

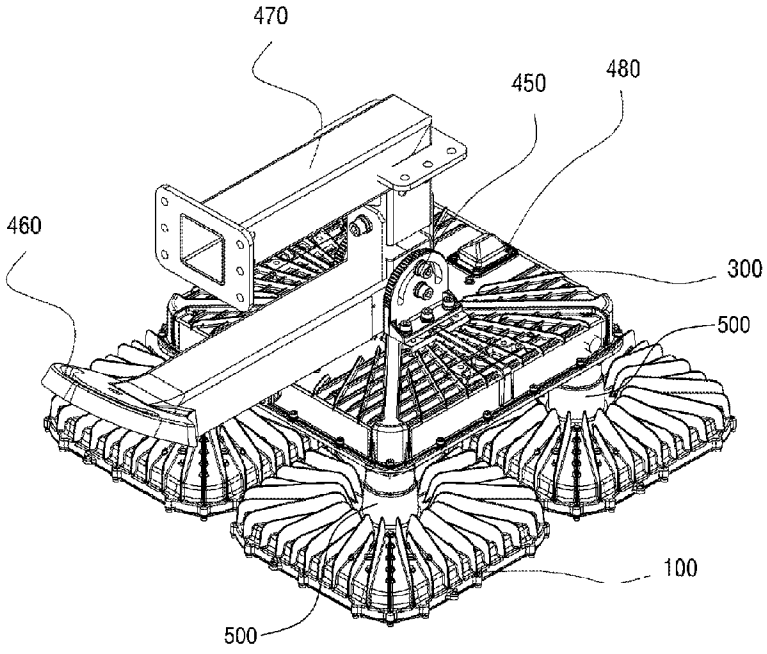

INTERNATIONAL SEARCH REPORT

International application No.
PCT/KR2014/008416

A. CLASSIFICATION OF SUBJECT MATTER

F21S 2/00(2006.01)i, F21V 17/00(2006.01)i, F21V 29/00(2006.01)i, F21W 131/105(2006.01)n

According to International Patent Classification (IPC) or to both national classification and IPC

B. FIELDS SEARCHED

Minimum documentation searched (classification system followed by classification symbols)
F21S 2/00; F21V 21/00; F21V 29/00; B23B 35/00; F21V 5/04; F21V 7/04; F21V 17/00; F21W 131/105

Documentation searched other than minimum documentation to the extent that such documents are included in the fields searched
Korean utility models and applications for utility models
Japanese utility models and applications for utility models

Electronic data base consulted during the international search (name of data base and, where practicable, search terms used)
eKOMPASS(KIPO internal) & Keywords: LED, reflect, power supply, hinge, support

C. DOCUMENTS CONSIDERED TO BE RELEVANT

Category*	Citation of document, with indication, where appropriate, of the relevant passages	Relevant to claim No.
Y	US 2013-0033867 A1 (BARRY CASON COPLIN et al.) 07 February 2013 See abstract; paragraphs [0017]-[0029], [0036]; and figures 1A-4.	1-17
Y	KR 10-1298576 B1 (DAEJIN DMP CO., LTD.) 22 August 2013 See paragraphs [0029]-[0034], [0052], [0053]; claims 4, 5; and figures 2, 6.	1-17
Y	CN 202733483 U (CHUANGNENG CENTURY TECHNOLOGY (BEIJING) CO., LTD.) 13 February 2013 See paragraphs [0039]-[0047]; claim 3; and figures 1, 2.	5-7,13-16
A	CN 101758259 A (CSSC GUANGZHOU SHIPBUILDING CO., LTD.) 30 June 2010 See paragraphs [0030], [0031]; and figures 4-6-2.	1-17
A	WO 2012-161426 A2 (K.M.W. INC.) 29 November 2012 See paragraphs [54]-[68]; claim 1; and figure 1.	1-17

☐ Further documents are listed in the continuation of Box C.

☒ See patent family annex.

* Special categories of cited documents:
"A" document defining the general state of the art which is not considered to be of particular relevance
"E" earlier application or patent but published on or after the international filing date
"L" document which may throw doubts on priority claim(s) or which is cited to establish the publication date of another citation or other special reason (as specified)
"O" document referring to an oral disclosure, use, exhibition or other means
"P" document published prior to the international filing date but later than the priority date claimed
"T" later document published after the international filing date or priority date and not in conflict with the application but cited to understand the principle or theory underlying the invention
"X" document of particular relevance; the claimed invention cannot be considered novel or cannot be considered to involve an inventive step when the document is taken alone
"Y" document of particular relevance; the claimed invention cannot be considered to involve an inventive step when the document is combined with one or more other such documents,such combination being obvious to a person skilled in the art
"&" document member of the same patent family

Date of the actual completion of the international search	Date of mailing of the international search report
16 December 2014 (16.12.2014)	**16 December 2014 (16.12.2014)**

Name and mailing address of the ISA/KR
International Application Division
Korean Intellectual Property Office
189 Cheongsa-ro, Seo-gu, Daejeon Metropolitan City, 302-701,
Republic of Korea
Facsimile No. +82-42-472-7140

Authorized officer
KIM, Do Weon
Telephone No. +82-42-481-5560

Form PCT/ISA/210 (second sheet) (July 2009)

INTERNATIONAL SEARCH REPORT

Information on patent family members

International application No.
PCT/KR2014/008416

Patent document cited in search report	Publication date	Patent family member(s)	Publication date
US 2013-0033867 A1	07/02/2013	US 2011-0068708 A1	24/03/2011
		US 8310158 B2	13/11/2012
		US 8618735 B2	31/12/2013
		WO 2011-037667 A1	31/03/2011
KR 10-1298576 B1	22/08/2013	None	
CN 101758259 A	30/06/2010	CN 101758259 B	23/11/2011
WO 2012-161426 A2	29/11/2012	AU 2012-259682 A1	19/12/2013
		CA 2836869 A1	29/11/2012
		CN 103765089 A	30/04/2014
		EP 2711616 A2	26/03/2014
		JP 2014-515174 A	26/06/2014
		KR 10-1325142 B1	20/11/2013
		KR 10-2012-0129737 A	28/11/2012
		MX 2013013541 A	27/05/2014
		US 2014-0111987 A1	24/04/2014
		WO 2012-161426 A3	17/01/2013