United States Patent [19]

Yu

[11] **Patent Number: Des. 287,907**

[45] **Date of Patent: ** Jan. 27, 1987**

[54] **MAGNETIC TAPE STORAGE DRAWER**

[75] Inventor: **Jackson Yu,** Taipei, Taiwan

[73] Assignee: **Worthy Industrial Inc.,** Taipei, Taiwan

[**] Term: **14 Years**

[21] Appl. No.: **629,463**

[22] Filed: **Jul. 10, 1984**

[52] **U.S. Cl.** **D3/35;** D6/407; D6/510

[58] **Field of Search** D3/30.1, 33, 35, 74, D3/75; D6/510, 407, 445, 446, 448; 206/387, 472, 444; 260/22, 22.3; 312/126

[56] **References Cited**

U.S. PATENT DOCUMENTS

D. 171,219	12/1953	Mills	D6/510
D. 230,779	3/1974	Kryter	D3/35
D. 232,508	8/1974	Wright	D6/510
D. 239,472	4/1976	Clowe	D3/35
D. 254,526	3/1980	Dolphin	D19/75
D. 263,777	4/1982	Thompson	D6/448
D. 265,768	8/1982	Howley	D3/35
4,117,931	10/1978	Berkman	D3/35

Primary Examiner—George P. Word

Attorney, Agent, or Firm—Oblon, Fisher, Spivak, McClelland, & Maier

[57] **CLAIM**

The ornamental design for a magnetic tape storage drawer, as shown.

DESCRIPTION

FIG. **1** is a perspective view of a magnetic tape storage drawer showing my new design;
FIG. **2** is a front elevational view thereof;
FIG. **3** is a rear elevational view thereof;
FIG. **4** is a right side elevational view thereof;
FIG. **5** is a left side elevational view thereof;
FIG. **6** is a top plan view thereof; and
FIG. **7** is a bottom plan view thereof.

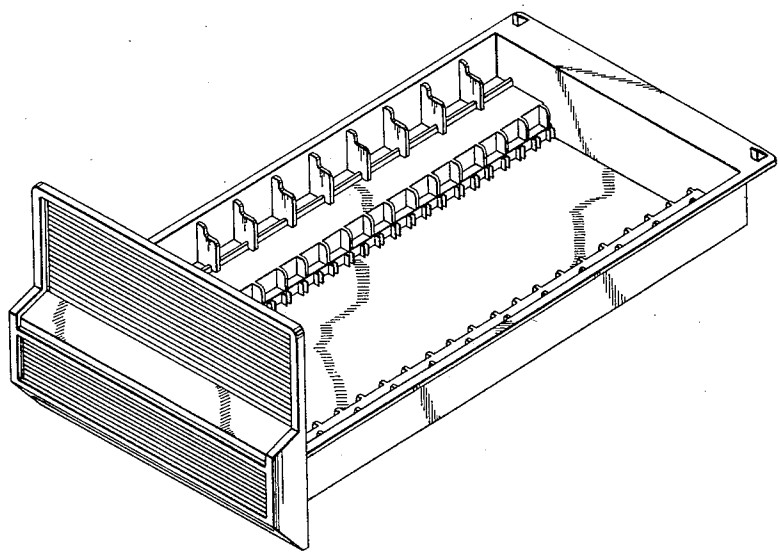

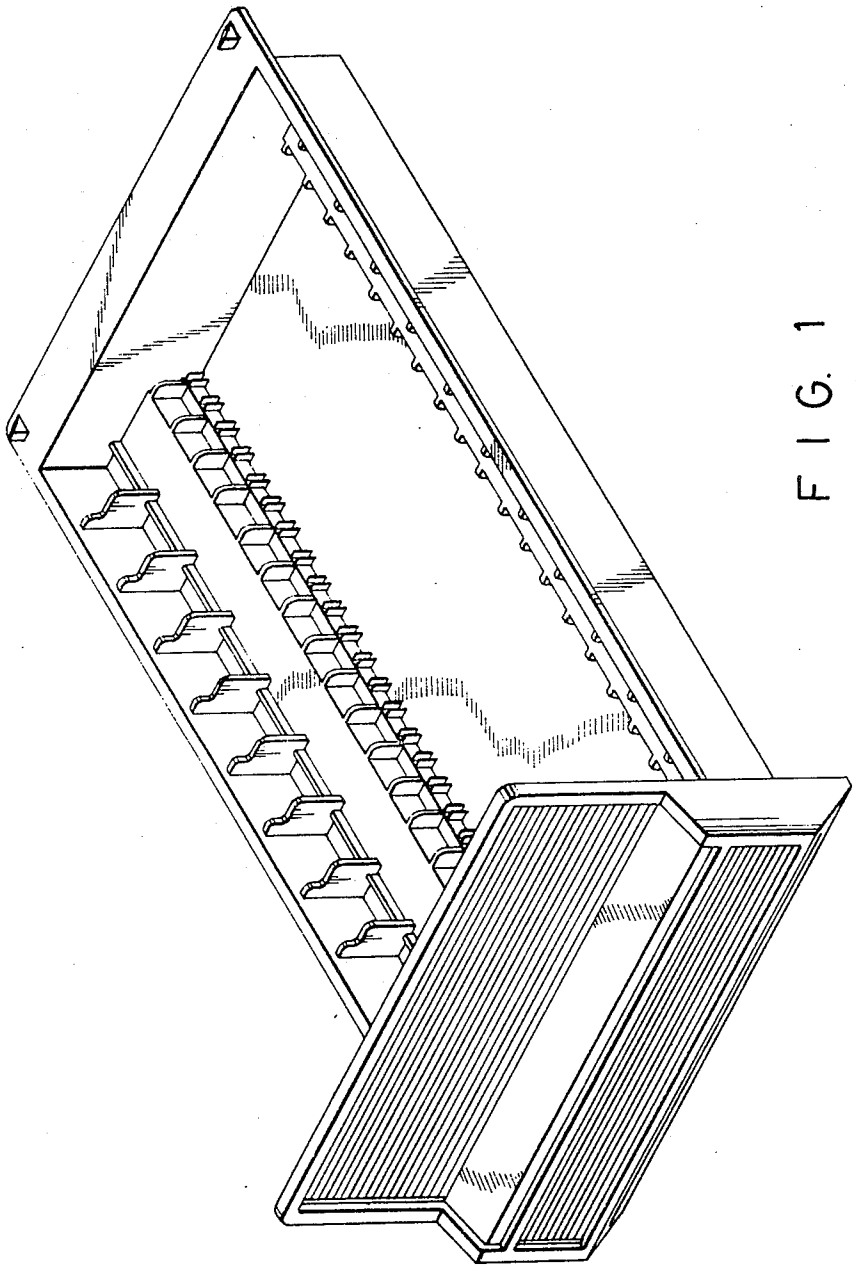

FIG. 1

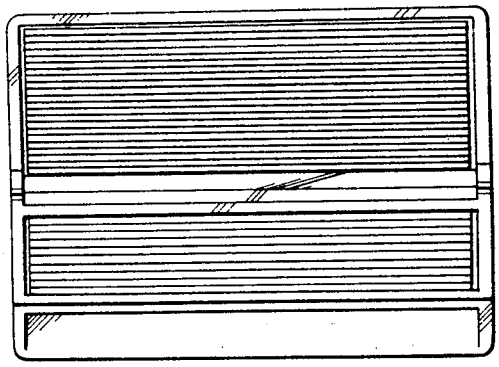

FIG. 2

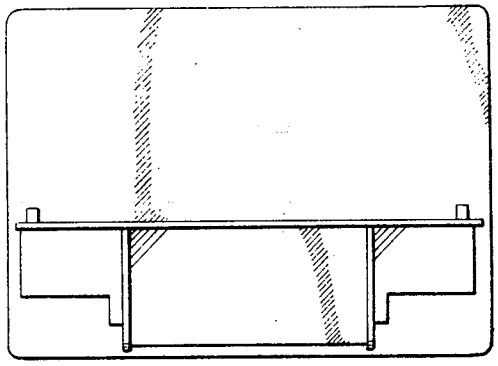

FIG. 3

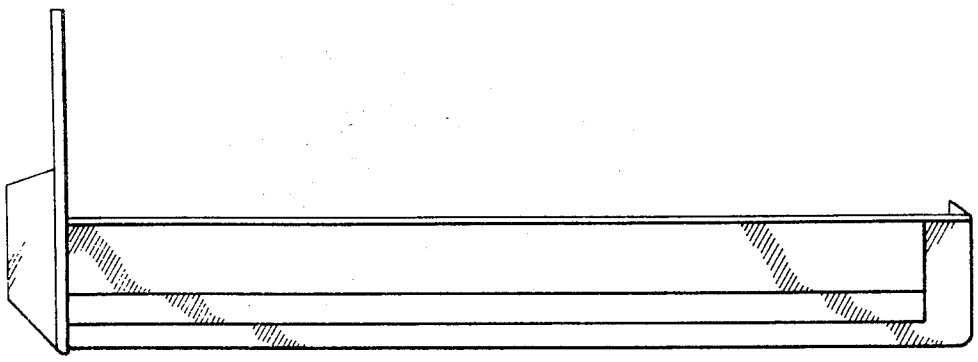

FIG. 4

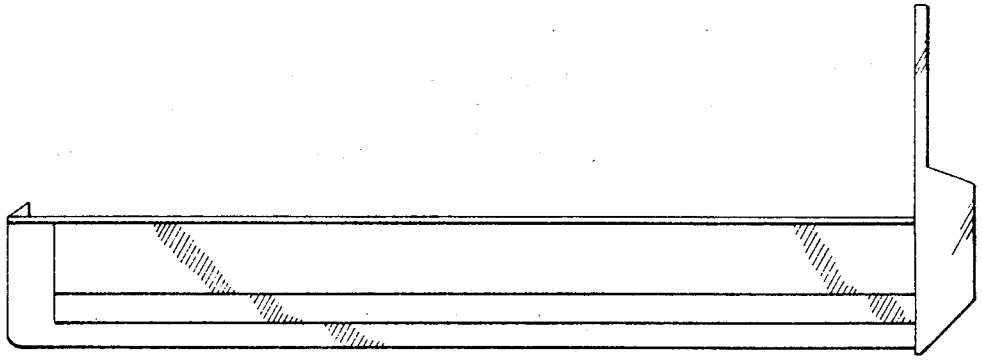

FIG. 5

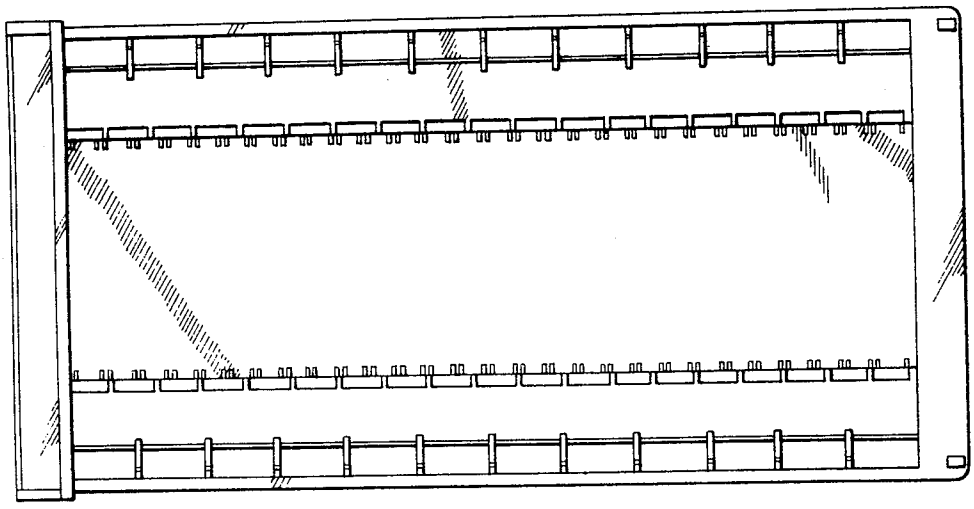

FIG. 6

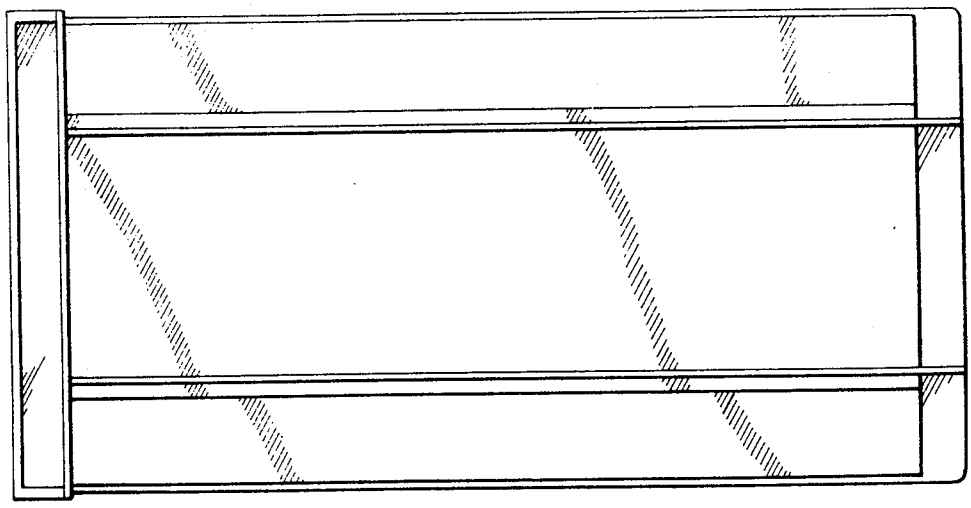

FIG. 7