April 23, 1963 A. K. CUMMINGS 3,086,550

SLUSH PUMP VALVE WITH AIR CUSHIONED VALVE HEAD

Filed Oct. 28, 1960 2 Sheets-Sheet 1

Fig. 1

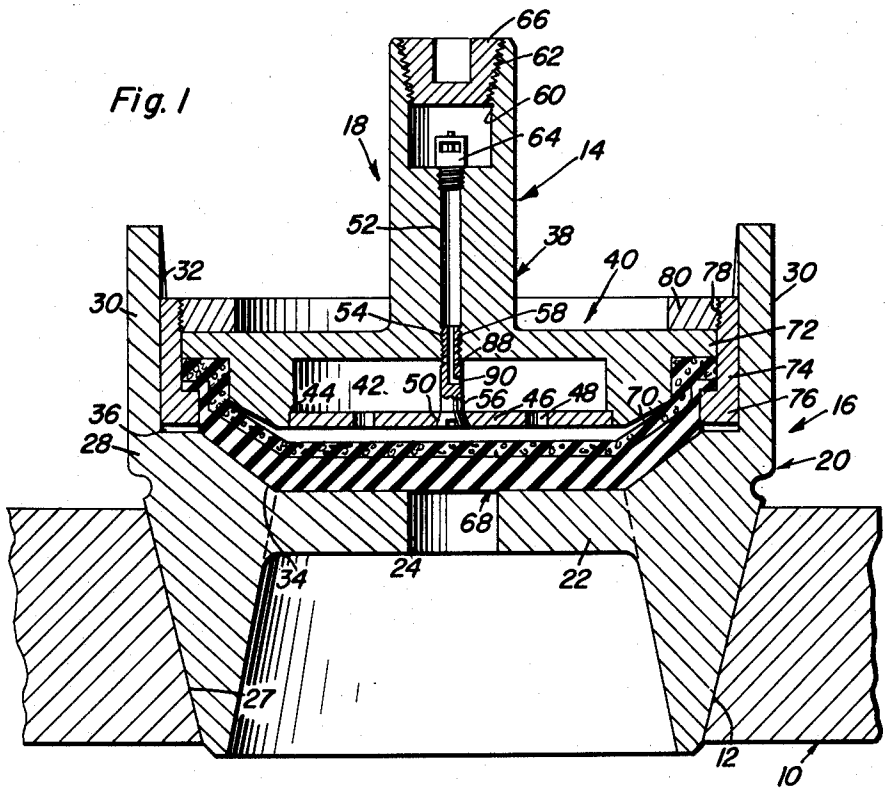

Fig. 2

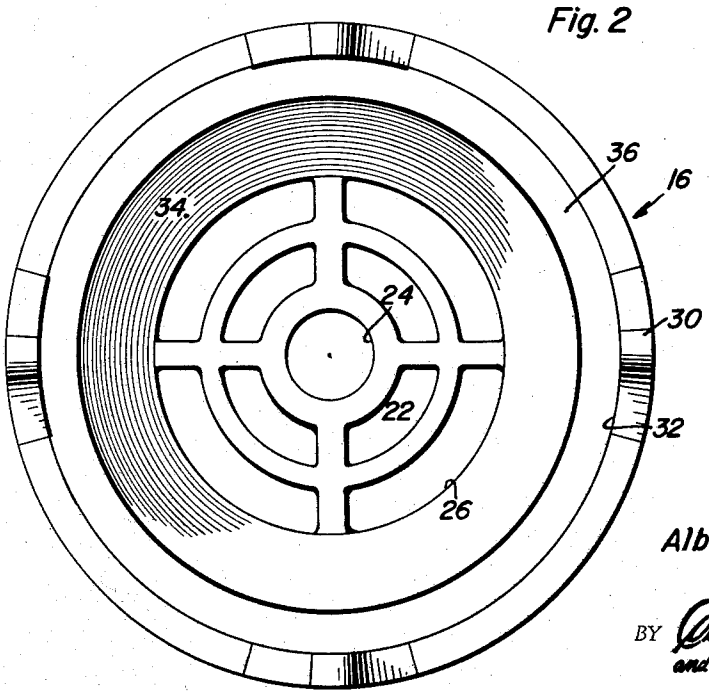

Albert K. Cummings
INVENTOR.

BY Clarence A. O'Brien and Harvey B. Jacobson
Attorneys

April 23, 1963 A. K. CUMMINGS 3,086,550

SLUSH PUMP VALVE WITH AIR CUSHIONED VALVE HEAD

Filed Oct. 28, 1960 2 Sheets-Sheet 2

Fig. 3

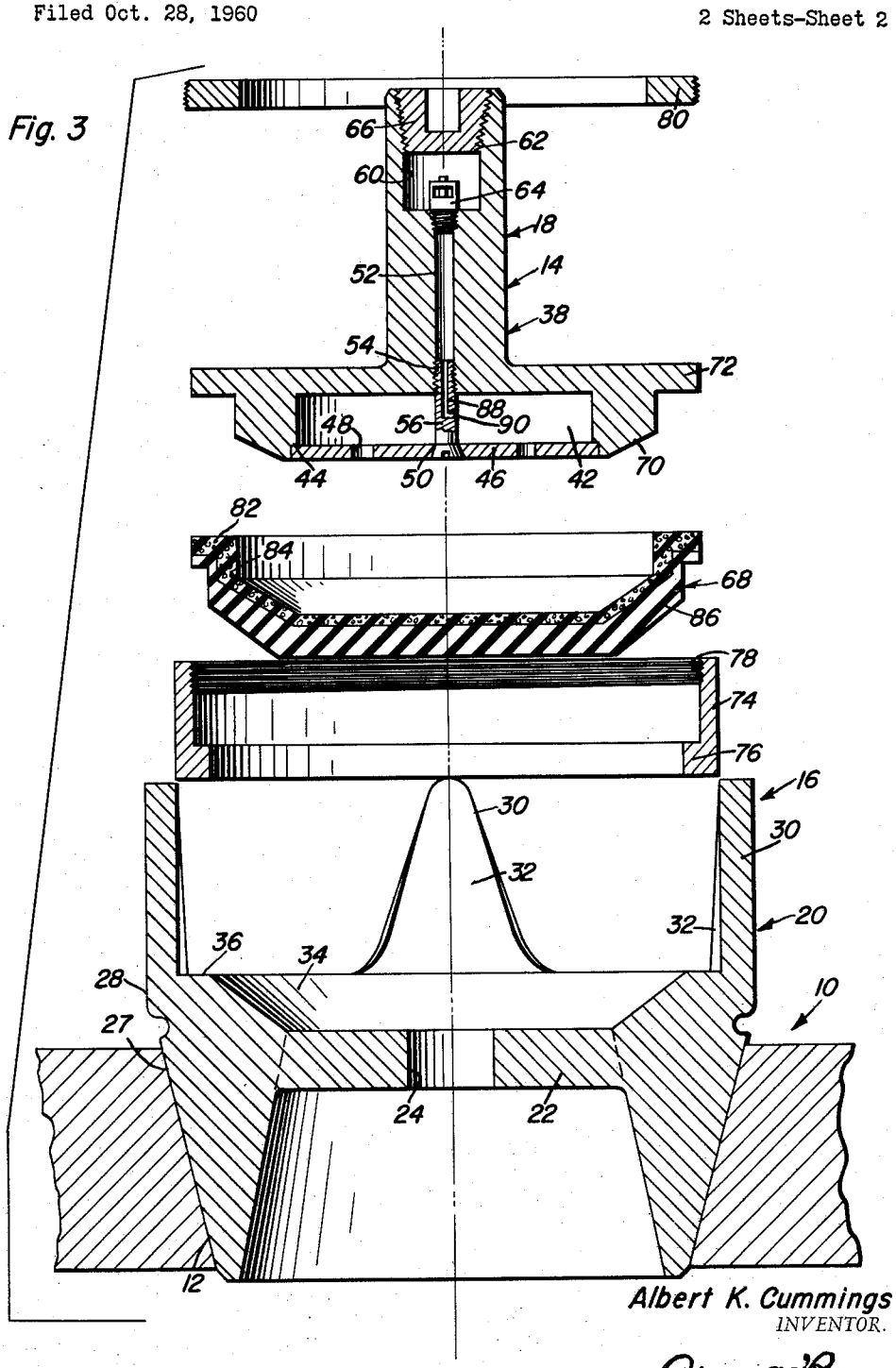

Albert K. Cummings
INVENTOR.

BY Clarence A. O'Brien and Harvey B. Jacobson
Attorneys

United States Patent Office

3,086,550

Patented Apr. 23, 1963

1

3,086,550
SLUSH PUMP VALVE WITH AIR CUSHIONED VALVE HEAD

Albert K. Cummings, 3115 SW. 20th, Oklahoma City 8, Okla.

Filed Oct. 28, 1960, Ser. No. 65,709
7 Claims. (Cl. 137—514)

This invention relates to a valve and seat assembly and more particularly to a valve and seat assembly adapted to be used in pumps being utilized for drilling oil wells and the like. Although the valve and seat construction of the instant invention is specifically adapted for pumps of this type, it is to be noted that the valve and seat assembly may also be used to an advantage in pumps used for other purposes wherein the pumps are required to work under relatively high pressures.

A slush pump valve is oftentimes required to work under pressures up to 3000 pounds pressure per square inch and the fluid passing through the valve assembly sometimes contains mud, stone, and other foreign materials and a slush pump valve must therefore be capable of efficient operation under these adverse conditions.

The valve and seat assembly of the instant invention comprises a valve seat having a conical seating surface and a valve member adapted for guided movement toward and away from the seating surface of the valve seat. The valve member is provided with a diametrically enlarged head portion having an air pressure chamber formed therein opening in the face of the valve head adapted for engagement with the valve seat and a resilient cushion member is disposed over this face of the valve head and has its marginal edge portions sealingly secured to the marginal edge portions of the valve head. An apertured cover plate is secured over the air pressure chamber formed in the valve head and a means is provided for introducing air under pressure into the air pressure chamber. The air pressure within the air pressure chamber will normally flex the central portion of the resilient cushion member away from the valve head and the seating surface on the valve seat is adapted to seatingly engage a complementary surface on the central portion of the resilient cushion member. Thus, the air pressure within the chamber formed in the valve head will cushion the seating action of the valve head with the valve seat. The apertures formed in the cover plate are of a diameter to inhibit the movement of the air disposed between the cover plate and the resilient cushion member into the chamber formed within the valve head and therefore the air pressure within the valve head not only offers a cushion for the initial engagement of the valve head with the valve seat, but also acts as a shock absorber inasmuch as initial seating of the valve head with the valve seat will raise the air pressure between the resilient cushion member and the cover plate above that of the air pressure within the air pressure chamber formed in the valve head until such time has elapsed that all of the air between the resilient cushion member and the cover plate may pass through the openings formed in the latter into the chamber formed within the valve head.

The main object of this invention is to greatly reduce the shock of the valve head moving into seating engagement with the valve seat while operating under pressures up to 3000 pounds per square inch.

A further object of this invention, in accordance with the preceding object, is to provide an inflated resilient seating surface on the valve head for engagement with the valve seat whereby the seating engagement of the valve head with the valve seat will be cushioned to a great extent.

A still further object is to provide a means whereby

2

air pressure within the inflated cushion member may be varied as desired.

And a final object to be specifically enumerated herein is to provide a valve and seat assembly which will conform to conventional forms of manufacture, be of simple construction and automatic in operation so as to provide a device that will be economically feasible, long lasting and operate automatically under substantially all conditions.

These together with other objects and advantages which will become subsequently apparent reside in the details of construction and operation as more fully hereinafter described and claimed, reference being had to the accompanying drawings forming a part hereof, wherein like numerals refer to like parts throughout, and in which:

FIGURE 1 is a vertical sectional view taken substantially upon a plane passing through the longitudinal center line of the valve and seat assembly with the assembly being shown secured in a port of a pump casing;

FIGURE 2 is a top plan view of the valve seat;

FIGURE 3 is an exploded vertical sectional view similar to that of FIGURE 1 and showing the manner in which the valve and seat are assembled.

Referring now more specifically to the drawings the numeral **10** generally designates a pump casing in which there is formed an outlet port **12** in which the valve and seat assembly of the instant invention is disposed. The valve and seat assembly is generally referred to by the reference numeral **14** and includes a valve seat generally referred to by the reference numeral **16** and a valve head assembly generally referred to by the numeral **18**.

The valve seat assembly **16** includes a sleeve-like seat body generally referred to by the reference numeral **20** which is provided with a unitary net **22**. The net **22** is centrally apertured as at **24** and has a plurality of openings **26** formed about the central aperture **24**. The lower outer surfaces **27** of the seat body **20** are downwardly convergent and are seated within the port **12** and secured therein in any convenient manner. The upper outer surfaces **28** of the seat body **20** are substantially cylindrical and the seat body **20** includes a plurality of circumferentially spaced and parallel upwardly extending valve member guides **30** whose inner surfaces **32** are arcuate. The seat body **20** is provided with a conical seating surface **34** whose outer edges terminate in a radially extending shoulder portion **36** inwardly of the valve member guides **30**.

The valve head assembly includes a stem portion generally referred to by the reference numeral **38** whose lower end terminates in a diametriaclly enlarged head portion generally referred to by the reference numeral **40**. The head portion **40** is circular and is provided with a centrally disposed air chamber recess **42** which opens downwardly toward the valve seat assembly **16**. The chamber **42** includes a recessed annular shoulder **44** adjacent its opening in which a cover plate **46** is seated. The cover plate **46** is provided with a plurality of apertures **48** for a purpose to be hereinafter more fully set forth and a centrally disposed bore **50**. The stem portion **38** of the valve head assembly **18** is provided with a longitudinal bore **52** whose lower end is threaded as at **54** and the cover plate **46** is secured within the recess **44** by means of headed fastener **56** whose threaded shank portion **58** is threadedly engaged in the lower end of the longitudinal bore **52**.

The upper end of the longitudinal bore **52** is provided with a counterbore **60** whose outer end is tapered and provided with threads as at **62**. A valve member **64** is threadedly engaged in the upper end of the longitudinal bore **52** and a pipe plug **66** is threadedly engaged in the threaded tapered bore **62**.

The face of the head portion **40** adjacent the valve seat

assembly 16 has a resilient diaphragm cushion member generally referred to by the reference numeral 68 disposed thereover and the head portion 40 is provided with a surface 70 complementary to the seating surface 34 of the valve seat assembly 16 and the inner surface of the resilient cushion member 68, the latter having an outer face complementary to surface 34 and constituting the sole portion of said valve member disposed for engagement with surface 34. The head portion 40 is provided with an outer radially extending annular seating flange 72 and a retaining sleeve 74 snugly receives the seating flange 72 and terminates at its lower end in an inwardly directed annular shoulder portion 76. The marginal edges or portions of the resilient cushion member 68 are disposed between the annular shoulder 76 and the seating flange 72 and the upper end of the retaining sleeve 74 projects above the surface of the head portion 40 remote from the valve seat assembly 16 and is internally threaded as at 78. An annular lock ring 80 is threadedly engaged with the upper portion of the retaining sleeve 74 and is in frictional engagement with the upper surface of the head portion 40 thereby compressing the marginal portions of the cushion member 68 between the annular shoulder 76 and the seating flange 72. In this manner, the resilient cushion member 68 has its marginal portions sealingly secured to the marginal portions of the head portion 40 of the valve head assembly 18.

It will be noted that the resilient cushion member 68 includes a portion 82 through which a plurality of crossed steel wires 84 extend. It is to be noted that the steel wires 84 may be conveniently wrapped with nylon or other suitable material (not shown) if desired. The steel wires 84 provide strength for the resilient cushion member to operate under pressures up to 3000 pounds per square inch and the lower portion 86 of the resilient cushion member may be made of any suitable resilient material such as rubber or certian types of plastics.

The headed fastener 56 is provided with a longitudinal bore 88 whose upper end communicates with the longitudinal bore 52 and whose lower end terminates in a lateral bore 90 communicated with the air chamber recess 42. Thus, the plug 66 may be removed and air under pressure may be introduced into the counterbore 60 in order to increase the air pressure within the air chamber 42.

It is further to be noted that the lower surface of the retaining sleeve 74 will always be maintained in spaced relation relative to the shoulder portion 36 by means of the resilient cushion member 68 disposed between the seating surfaces 34 and 70. Additionally, it is to be undueristood that the outer surfaces of the retaining sleeve 74 are cylindrical and that they are in sliding contacting relation with the arcuate inner surfaces 32 of the valve member guides 30 thereby providing a means whereby the valve head assembly 18 is guided in its movement toward the valve seat assembly 16 by means of the valve seat assembly itself. It is, of course, to be realized that the stem portion 38 of the valve head assembly 18 is adapted to be slidingly received through a valve guide bore carried by the pump casing 10 in which the valve and seat assembly 14 is disposed.

In operation, fluid traveling upward through the port 26 will first compress the air within the chamber recess 42 enabling the upper surface of the resilient cushion member 68 to rest against the lower surface of the cover plate 46. Further pressure from below the valve head assembly 18 will cause the latter to move upwardly thus opening the valve port 26. Upon the reduction of the pressure within the valve port 26, the pressure within the air chamber recess 42 will first slightly expand the resilient cushion member 68 as illustrated in FIGURE 1 of the drawings and then the fluid pressure above the valve head assembly 18 will urge the latter downwardly and into engagement with the valve seat assembly 16. Upon initial contact of the resilient cushion member 68 with the seating surface 34 of the valve seat assembly 16, the air disposed between the cover plate 46 and the resilient cushion member 68 will be compressed and forced through the apertures 48 formed in the cover plate 46. It is to be noted that the apertures 48 in the cover plate 46 are of a diameter to inhibit the movement of the air from between the resilient cushion member 68 and the cover plate 46 into the air chamber recess 42 so that the shock of the valve head assembly 18 moving into seated engagement with the valve seat assembly 16 will be further cushioned.

It is to be noted that the adjacent surfaces of the cover plate 46 and the head portion 40 are flush so that there will be no protruding sharp edges to inflict damage upon the resilient cushion members 68.

The foregoing is considered as illustrative only of the principles of the invention. Further, since numerous modifications and changes will readily occur to those skilled in the art, it is not desired to limit the invention to the exact construction and operation shown and described, and accordingly all suitable modifications and equivalents may be resorted to, falling within the scope of the invention as claimed.

What is claimed as new is as follows:

1. A slush pump valve assembly with air cushioned valve head comprising a valve seat adapted to be secured in a pump outlet port, said seat having an opening formed therethrough and a seating surface disposed about one end of said opening, a valve member, means adapting said valve member for guided movement toward and away from said seating surface, an enlarged head on said valve for seating engagement with said seating surface, an air chamber recess in said head opening toward said seat and a flexible resilient diaphragm and cushion member disposed across and overlying said recess and the portions of said head disposed about said recess, means sealingly securing the marginal portions of said cushion member to said portions of said head, means for introducing air under pressure into said chamber, said resilient cushion member, inwardly of said securing means, including an outer face complementary to and engageable with said seating surface and comprising the sole contact of said head with said seating surface, an apertured cover plate secured in the outer end of said air chamber recess inwardly of said cushion member and having an outer surface flush with the adjacent surfaces of said portions of said head disposed about said recess.

2. The combination of claim 1 wherein said apertures in said cover plate being of a size to inhibit the flow of air from between said cover plate and said cushion member into said air chamber recess upon seating engagement of said head with said seat.

3. The combination of claim 1 wherein said seat seating surface is conical, said head having a complementary seating surface disposed about the opening of said air chamber recess.

4. The combination of claim 3 wherein said head includes a radially extending annular seating flange projecting outwardly away from said head seating surface, a retaining sleeve having a bore formed therethrough snugly receiving said head terminating at one end in an inwardly directed annular shoulder portion underlying said head annular seating flange, the outer marginal edges of said resilient cushion member being disposed between said shoulder and seating flange, the end of said sleeve remote from said shoulder being internally threaded, said securing means comprising an externally threaded annular lock ring threadedly engaged in the threaded end of said sleeve and frictionally engaging the face of said head remote from said resilient cushion member.

5. The combination of claim 1 wherein said guide means on said head comprises a stem portion, said air introducing means including a longitudinally extending bore in said stem communicating with said air chamber recess, valve means disposed in said bore.

6. The combination of claim 5 wherein the end of said

bore remote from said air chamber recess is outwardly tapered and threaded and has a pipe plug removably secured in said tapered end.

7. A slush pump valve assembly with air cushioned valve head comprising a valve seat adapted to be secured in a pump outlet port, said seat having an opening formed therethrough and a seating surface disposed about one end of said opening, a valve member, means adapting said valve member for guided movement toward and away from said seating surface, an enlarged head on said valve for seating engagement with said seating surface, an air chamber recess in said head opening toward said seat and a flexible resilient diaphragm and cushion member disposed across and overlying said recess and the portions of said head disposed about said recess, means sealingly securing the marginal portions of said cushion member to said portions of said head, means for introducing air under pressure into said chamber, said resilient cushion member, inwardly of said securing means, including an outer face complementary to and engageable with said seating surface and comprising the sole contact of said head with said seating surface, said guide means on said head comprising a stem portion, said air introducing means including a longitudinally extending bore in said stem communicating with said air chamber recess, valve means disposed in said bore, the end of said bore adjacent

said air chamber recess being internally threaded, an apertured cover plate secured over said chamber, the adjoining outer surfaces of said cover plate and valve head being flush, the apertures in said cover plate being of a size to inhibit the flow of air from between said cover plate and said cushion member into said chamber upon seating engagement of said head with said seat, said cover plate being centrally apertured and having a threaded fastener secured through said central aperture and threadedly engaged in the adjacent end of said bore, said threaded fastener including a longitudinal bore communicating with said head bore at one end and terminating at the other end in a lateral bore communicating with said air chamber recess.

References Cited in the file of this patent

UNITED STATES PATENTS

524,049	Schutte	Aug. 7, 1894
915,624	Perkins	Mar. 16, 1909
1,373,906	Needham	Apr. 5, 1921
1,654,772	Akeyson et al.	Jan. 3, 1928
1,733,180	Biedermann	Oct. 29, 1929
2,642,255	Lindgren	June 16, 1953
2,876,982	Snider	Mar. 10, 1959