OPIC
Office de la propriété intellectuelle du Canada

CIPO
Canadian Intellectual Property Office

(12) (19) (CA) **Brevet-Patent**

(11) (21) (C) **2,141,866**
(86) 1993/08/06
(87) 1994/02/17
(45) 2001/02/27

(72) Sauter, Erich W., US
(73) WARNER-LAMBERT COMPANY, US

(51) Int.Cl.[6] A61K 9/48, A61J 3/07
(30) 1992/08/07 (07/927,066) US

(54) **MATERIEL ET PROCEDE D'ENCAPSULATION**

(54) **ENCAPSULATING EQUIPMENT AND METHOD**

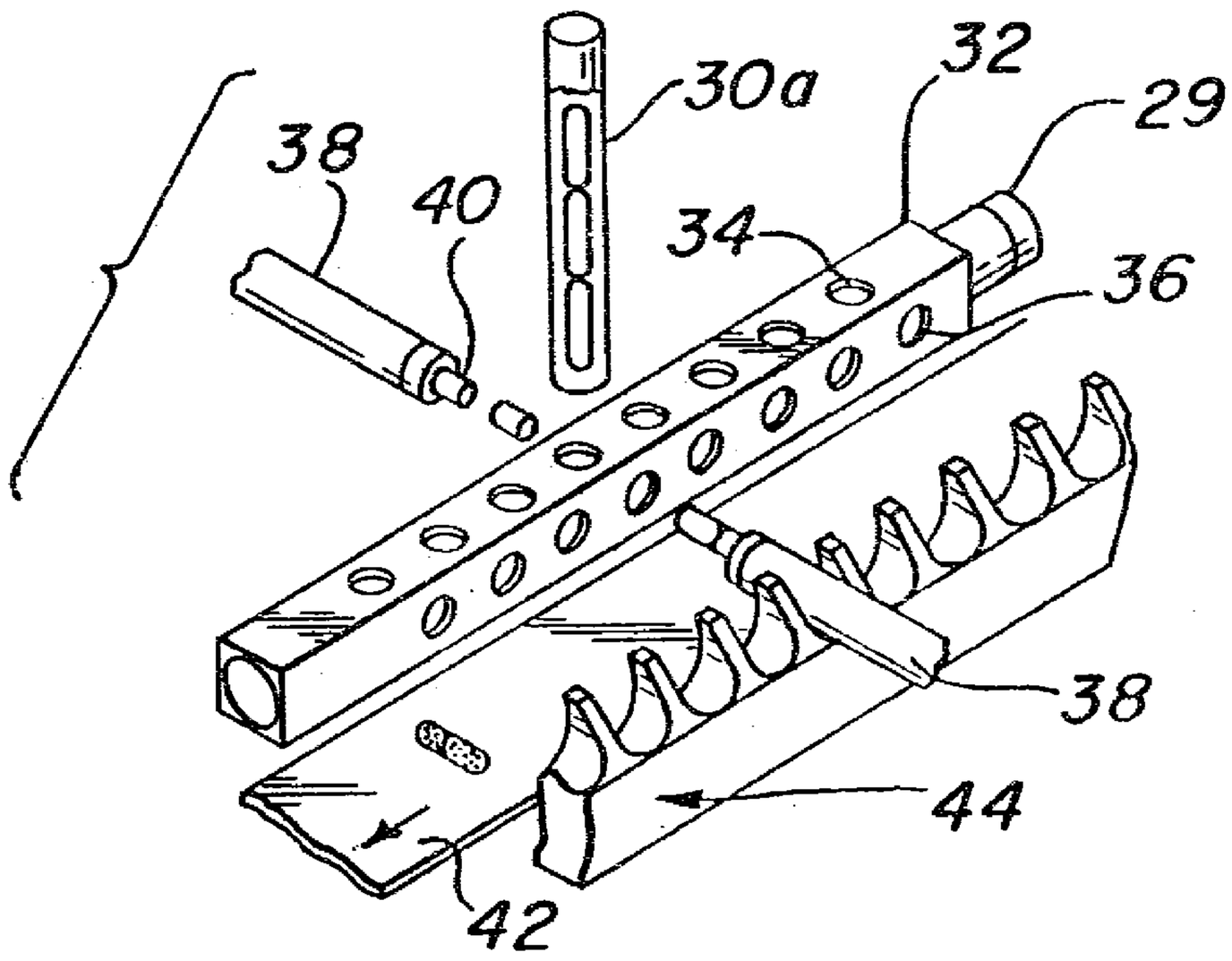

(57) Procédé et appareil d'encapsulation de petits articles tels que des médicaments de forme cylindrique ou des pastilles. Des demi-capsules de gélatine sont formées sur les pointes (11) de blocs (10) et sont renvoyées vers un poste où elles sont taillées à mesure et adaptées sur les extrémités opposées du produit à encapsuler. Les moitiés de capsules sont d'abord séchées jusqu'à avoir une humidité d'environ 20 % en poids puis elles sont adaptées par pression sur les extrémités des pastilles et on les laisse sécher afin d'obtenir un assemblage serré par rétrécissement qui rend pratiquement impossible l'enlèvement des couvertures de gélatine sans laisser de traces visibles de spoliation. Le produit fini présente une surface externe plus lisse qui se prête à l'impression.

(57) Method and apparatus for encapsulating small articles such as medicines in caplet or cylindrical form are disclosed. Gelatin half capsules are formed on the pins (11) of pin blocks. (10) and are delivered to a station at which they are trimmed and fitted over the opposite ends of the product to be encapsulated. The capsule halves are first dried to a condition in which they have about 20 wt. % moisture and are thereafter press fitted over the ends of the caplets and allowed to dry to shrink fit tightly onto the caplets' making it virtually impossible to remove them from their gelatin coverings without leaving visible evidence of tampering. The finished product has a smoother outer surface which lends itself to overprinting.

PCT WORLD INTELLECTUAL PROPERTY ORGANIZATION
International Bureau

INTERNATIONAL APPLICATION PUBLISHED UNDER THE PATENT COOPERATION TREATY (PCT)

(51) International Patent Classification 5 : B65B 3/02, 43/00 — A1

(11) International Publication Number: WO 94/03365

(43) International Publication Date: 17 February 1994 (17.02.94)

2141866

(21) International Application Number: PCT/US93/07400

(22) International Filing Date: 6 August 1993 (06.08.93)

(30) Priority data:
07/927,066 — 7 August 1992 (07.08.92) — US

(71) Applicant: SAUTER MANUFACTURING CORPORATION [US/US]; 69 Zimmerman Lane, Hulmeville, PA 19047 (US).

(72) Inventor: SAUTER, Erich, W. ; No. 9 Canal Run West, Washington Crossing, PA 18977 (US).

(74) Agent: LINDROOTH, Charles, H.; Synnestvedt & Lechner, 2600 One Reading Center, 1101 Market Street, Philadelphia, PA 19107-2950 (US).

(81) Designated States: CA, JP, KR, European patent (AT, BE, CH, DE, DK, ES, FR, GB, GR, IE, IT, LU, MC, NL, PT, SE).

Published
With international search report.
With amended claims.

(54) Title: ENCAPSULATION EQUIPMENT AND METHOD

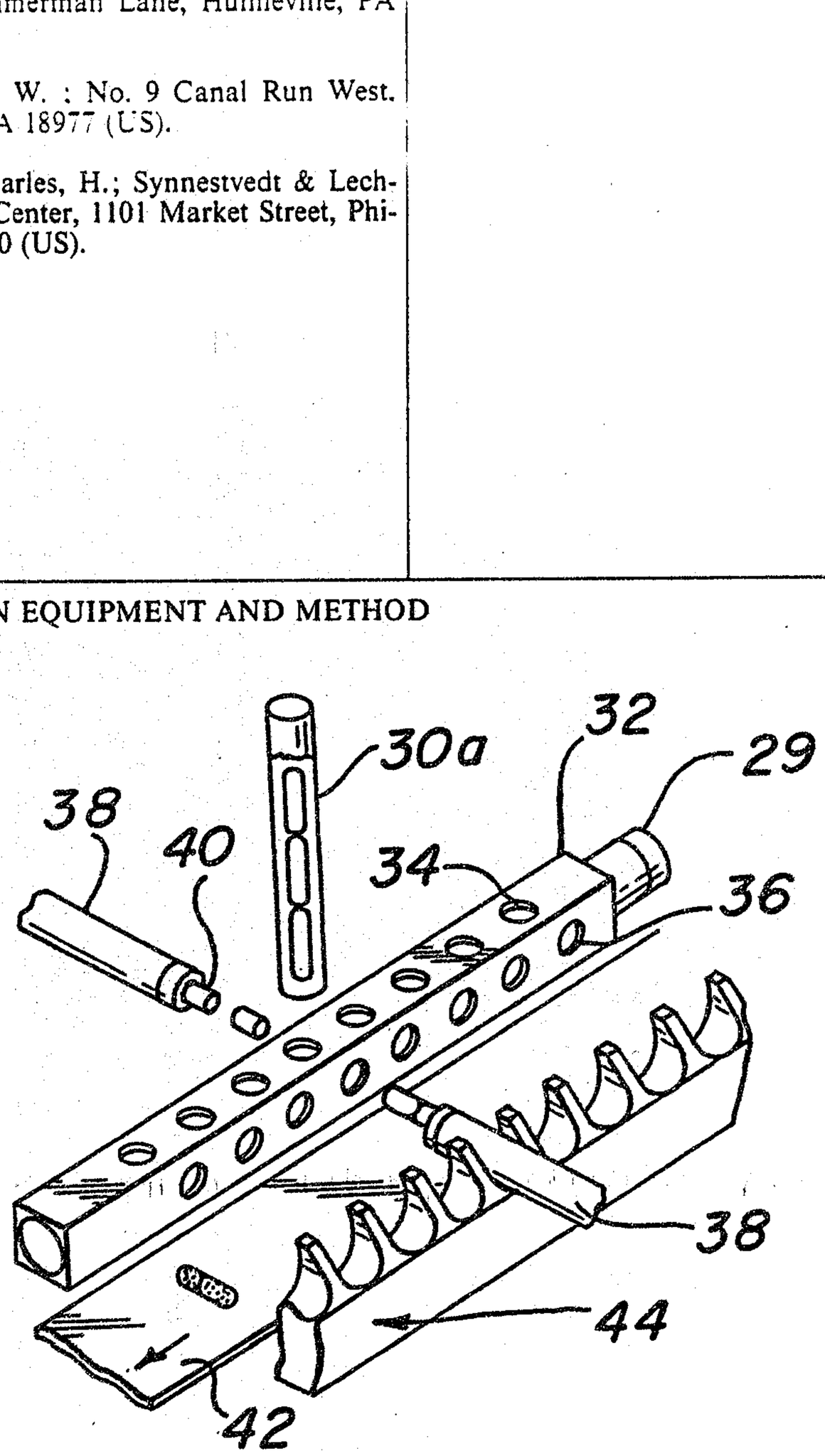

(57) Abstract

Method and apparatus for encapsulating small articles such as medicines in caplet or cylindrical form are disclosed. Gelatin half capsules are formed on the pins (11) of pin blocks (10) and are delivered to a station at which they are trimmed and fitted over the opposite ends of the product to be encapsulated. The capsule halves are first dried to a condition in which they have about 20 wt. % moisture and are thereafter press fitted over the ends of the caplets and allowed to dry to shrink fit tightly onto the caplets making it virtually impossible to remove them from their gelatin coverings without leaving visible evidence of tampering. The finished product has a smoother outer surface which lends itself to overprinting.

ENCAPSULATION EQUIPMENT AND METHOD

Field of the Invention

This invention relates to the encapsulation of small articles, particularly of medicines in cylindrical form, such as lozenges or caplets within a coating or covering of a gelatin or a gelatin-like substance.

Background of the Invention

The dispensing of medicines and the like within readily digestible gelatin capsules is a technique which has been in use since the middle of the last century. Typically, empty gel capsules have been manufactured in two piece cylindrical form, one piece being called the body and the other the top. The capsule bodies are filled with medicine and the tops, which have a slightly larger internal diameter than the outer diameter of the body, are placed over the filled bodies for supply to the ultimate consumer.

Over the years, a strong consumer preference has developed for taking many kinds of medicine in capsule form. The encapsulated products are generally considered to be easier to swallow, since they are tasteless and the gelatin coating does not dissolve until the capsule is within the stomach, so that bitter

and otherwise unpleasant tastes associated with many medicines are avoided.

Presently utilized forms of capsule-making equipment are essentially the same in operating principles and basic construction as the equipment described in Colton U.S. Patent No. 1,787,777, issued January 6, 1931.

According to Colton, capsule-forming pins are mounted in series on elongated bars called pin bars. Pairs of pin bars, one having pins dimensioned to form capsule tops or caps and the other having pins of slightly smaller diameter and forming capsule bodies, are moved along parallel paths to a dipping bath where the pins are immersed in a liquid gelatin of conventional composition under temperature conditions which allow for the formation of a coating of gelatin on each pin. When the desired amount of coating has accumulated, the bars with the coated pins are then removed from the gelatin bath, passed through a drier and then stripped from the pins by a stripper mechanism into openings in collets or holders associated with each pin. The ends of the capsule parts are then trimmed to length after which the capsule top or cap is fitted onto the capsule body. In the form Colton machines have been used for many years, the completed empty capsules are then deposited on a conveyer belt and, after inspection, are shipped to a pharmaceutical company or pharmacy where they are taken apart, filled with medicament and, thereafter, bottled in predetermined quantities for dispensing to the ultimate user.

Another known form of encapsulation equipment is as described and claimed in U.S. Patent No. 4,820,524, issued April 11, 1989. This equipment involves modification of Colton-type machinery so that the pin blocks are replaced with caplet holders which grip the caplets and individually dip and dry first one end and then the other end of each caplet to provide a complete overcoating of gelatin.

Summary of the Invention

The present invention relates to equipment used in conjunction with Colton-type capsule making machinery of the general kind described above. Essentially, the invention contemplates a method, equipment and product involving encapsulation of solid medicaments in the form of caplets, or like substantially cylindrical shapes, in gelatin capsules wherein the gelatin capsules are formed on pin bars as substantially identically dimensioned capsule halves. The identically dimensioned halves are delivered to a station at which they are fitted over the opposite ends of the caplets, which are fed to the station in end-to-end relationship, preferably by gravity, directly from the caplet forming dies. Means and method are provided for aligning the caplets and the capsule halves in coaxial relationship and thereafter press fitting the capsule halves onto the caplets until the facing end surfaces of the capsule halves abut each other at approximately the mid point of each caplet.

In accordance with a preferred embodiment of the invention, the capsule halves are delivered to the assembly station with a moisture content of greater than 10% and most preferably with a moisture content of

at least 18%. It has been found that when the caplets are encapsulated within gelatin capsules having such a relatively high moisture content, the gelatin capsule parts dry to shrink fit tightly onto the caplets making it virtually impossible to remove a caplet from within its gelatin covering without leaving plainly visible evidence of tampering.

Objects and Advantages of the Invention

Caplet encapsulation according to the teachings of the invention affords numerous advantages which are achieved by the use of identical half capsules which are fitted over a capsule with the end surfaces engaging one another. The encapsulated product has a smooth outer surface which can be easily overprinted, presents an attractive appearance and is difficult to open without exhibiting evidence of tampering. Since there is no overlap of the two halves of the semitransparent gelatin, one advantage of the invention is the capability of providing a precise color separation line when the two halves are differently colored for identification purposes.

An objective of the invention is the provision of equipment and method which avoid production of products having hidden defects. In use of the techniques of the invention, if the caplets are broken or otherwise deformed in the automatic machinery, it is virtually impossible to encapsulate them so that an encapsulated product having a hidden defect is virtually impossible to make. For similar reasons, if caplets are not delivered to the encapsulation station, the capsule halves cannot be joined so that empty capsules will not be inadvertently delivered to the end user.

Another important objective of the invention is the minimization of caplet handling prior to encapsulation. Advantages of this are the reduction of dust formed and an avoidance of chipping or breakage of caplets. Any dust which is formed as the caplets are conveyed to the encapsulation station can be readily withdrawn from the environment by a simplified form of vacuum equipment connected to the caplet delivery means.

Additional objectives are simplification of encapsulating equipment, higher production rates and a minimization of machine wear.

The above and other objects and advantages will become apparent from the following detailed description of the preferred embodiment of the invention.

Detailed Description of the Drawings

Figure 1 is a schematic representation of equipment and method incorporating the invention;

Figure 2 is an elevational view of equipment formed in accordance with the invention;

Figure 3 is an elevational view of the opposite side of the equipment of Figure 2;

Figure 4 is a perspective view of key components of the invention shown in Figures 2 and 3;

Figure 5 is a perspective view of a pin bar of the type illustrated and utilized in the equipment of Figures 2 and 3;

Figure 6 is a side view of a caplet encapsulated in accordance with the teachings of the present invention; and

Figure 7 is a view taken on lines 8-8 of Figure 3.

Detailed Description of the Embodiment of the Invention

Turning now to a detailed description of the presently preferred embodiment of the invention, Figure 1 shows a flow chart illustrating equipment and Figure 2 shows a side view of encapsulation equipment with a pair of pin bars 10 disposed in side-by-side relationship with pins 11 facing outwardly with respect to one another. From Figure 5, it can be seen that each pin bar 10 consists of an elongated base plate and a multiplicity of pins 11 on which gelatin capsule halves are intended to be formed. Each pin 11 is substantially cylindrical with a curved tip, and each has an outer diameter slightly greater than the diameter of the object to be encapsulated. The pins are preferably slightly tapered toward their free ends to facilitate removal of the gelatin capsule parts from the pins, as will be described later on.

The use of the pin bars in forming capsule parts and the equipment for transporting the bars to the point where the capsule pieces are stripped into holders or collets are of substantially conventional construction and are as is described in Colton U.S. Patent No. 1,787,777.

In the present invention, the capsule parts are used in the encapsulation of medicines in a solid, substantially cylindrical form commonly referred to as a caplet, and the term caplet

is intended to be used broadly as meaning a solid object formed of a medicament or like substance having an elongated, generally cylindrical cross-section with ends which are usually, but not necessarily, rounded.

As illustrated in Figures 2 and 3, pin bars 10 are shown as sideably mounted in outwardly facing guide tracks 12 and 13 mounted on a support 14 of the conventional Colton-type machine.

By way of general explanation of the conventional equipment, as modified according to the present invention, the schematic of Figure 1 illustrates the sequence of steps of the pin bars as they pass in parallel paths 15,15a first to a pin lubricating station 16 where a lubricant is applied to each pin, followed by a dipping station 17 in which they are immersed in a gelatin bath until a coating of gelatin of the desired thickness is accumulated. After removal from the gelatin bath, the pin bars 10 are moved to a drying station 18 wherein warm air is circulated for curing and hardening of the gelatin. Once the capsule parts have dried the requisite amount, as explained below, they are stripped from the pins by stripping devices, generally indicated at 19, and deposited in collets 20.

Upon delivery of the capsule parts to the station shown in Figures 1 and 2 where they are positioned to be stripped from pins 11, they have hardened to the point where they can be removed from the pins without damage but still are relatively moist. For reasons explained hereinafter, it is preferred that the gelatin capsule parts, at the point of placement onto the

caplets, have a moisture content of at least 10% and preferably greater than about 20%. The upper limit of moisture content can be determined by a few field trials. Generally, moisture content of over about 25% yields capsule parts which are apt to be too delicate for handling without some distortion and damage.

As noted above, as distinguished from prior art pin blocks having pins on which the capsule caps or tops are formed to fit over the capsule bodies, the pins in the blocks in guide tracks 12 and 13 have identical diameters so that identically sized capsule halves are formed thereon.

The reciprocating strippers 19 are of conventional construction and are associated with each pin of the pair of pin bars shown in Figure 2. As best seen in Figure 7, each stripper 19 comprises a pair of pivotally interconnected arms 19a and 19b which are mounted on a transversely extending bar 21 by suitable pivot pins 22. The strippers 19 are each spring loaded together by a spring 19c so that they yieldably fit over an associated pin. The strippers, one of which is also shown in broken lines in Figure 2, are initially held open by wedges 23 mounted on a holder bar 24 and are first moved vertically to positions in which they fit over each individual pin 11. Thereafter the lower ends are freed from the wedges and the springs 19c allow them to close over each pin as is known in the art. They are then moved laterally as indicated by arrow A in Figure 2 by cam means so that each strips its capsule half off the end of the associated pin 11 into a coaxially aligned opening 25 in each tubular holders or collet 20, there again being one collet for

each pin of the pair of pin blocks positioned, as shown in Figure 2.

Once the collets 20 have received a capsule half within each opening 25, the collets are raised in unison by means such as a rack and gear segment mechanism represented diagrammatically by block 26 in Figure 2. As the collets 20 are moved upwardly, the open end of each capsule half is trimmed to length by a knife 27, there being one knife 27 for each collet 20 as is shown in Fig. 7. As is explained in the above described Colton patent, the collets 20 are rotated against the knives to trim the capsule pieces to precise length. Each collet is raised to a position in a plane "P" so that it is in alignment with the ends of a caplet at a caplet holding station 28, as is explained with reference to Figure 2 and as illustrated schematically in perspective in Figure 4.

According to the invention, the caplets are formed and fed by caplet forming and feed means 30 which may include a caplet press of known construction and a plurality of tubular guide chutes 30a, one of which is illustrated in Figures 2-4. The guide chutes deliver the caplets to the caplet holding station 28 where they are properly oriented so that the step of encapsulation can be performed. As can be seen in Figure 2, the holding station includes means which preferably comprises an elongated cylindrically shaped turning bar 29, rotatably mounted within the cylindrical bore of an elongated fixed support 32, which in turn is spatially located intermediate the two rows of collets 20.

As can be seen again with reference to Figures 2 and 4, turning bar 29 is provided with a multiplicity of diametrically extending throughbores 33, each of which is sized to receive a caplet from an associated guide chute 30a and is moveable by rotation of the turning bar from the vertical position in which it receives the caplet.

The elongated fixed support 32 is similarly provided with a first series of openings in its upper surface, as shown at 34, there being one opening 34 for each throughbore 33, with the openings 34 in registry with throughbore 33 when the turning bar is in a position in which the throughbores are vertically oriented. As indicated above, the caplet dispensing means 30 is located immediately above the turning bar 29. The caplet dispensing means 30, which may include a caplet forming press, comprises a multiplicity of side-by-side tubular caplet chutes 30a which are configured to deliver the caplets one at a time in end-to-end relationship through each of the openings 34 in the elongated fixed support 32. When the throughbores 33 are in the vertical position in coaxial alignment with the openings 34, the caplets pass through each opening 34 and are stopped by the lowermost surface of the support 32. In this position, the caplets are wholly within the throughbores 33, and the turning bar is ready to be rotated to a position of alignment with the collets 20.

As shown in Figures 2 and 4, upon rotation of the turning bar 29 through an angle of 90°, the caplets are horizontally disposed. In this position, the ends of the throughbores 33 are in registry with horizontally

disposed openings 36 in the sides of the support 32, and the caplets are in coaxial alignment with the collets 20, as is seen in Figures 2 and 4.

Each collet 20 is of two piece construction with an outer sleeve portion 38 having an internal diameter sized to receive one half of a capsule, as generally explained above. The collet is further provided with an inner push rod portion 40 having a concave tip 41 shaped to conform to the closed end of a capsule half. Each push rod 40 is moveable relative to the sleeve portion 38 by cam means schematically illustrated in Figure 1 at 42 and 42a to eject a capsule half disposed therein. With the collets in the raised position, shown in Figure 2, advancement of the push rods move the capsule halves toward one another through the horizontally disposed openings 36 and onto the ends of caplets present in the throughbores 33.

The capsule halves have internal diameters substantially equal to the outer diameter of the caplets and, following trimming by the knives as above described, meet and align substantially at the mid point of each caplet so that their end surfaces abut one another with the caplet completely filling the space within the capsule. When the capsule halves are delivered to the caplets with a moisture content of at least 20%, the capsule halves continue to cure and shrink-fit tightly onto each caplet so that they cannot be removed without leaving some evidence of tampering, which can be readily detected by an inspector and ultimately by the end user. If a caplet is not delivered through its guide chute, the capsule halves do not join together since joinder is dependent upon

2141866

the presence of a caplet and empty capsules are not unwittingly delivered to a patient.

It can be seen from Figure 1 that the cam means 42a are two step cams so as to provide for ejection of the capsules from throughbores 33 following encapsulation. Thus, the cam means 42a advance the push nods 40 on one side of the turning block an additional distance so as to eject the encapsulated capsules and deposit them onto conveyor belt 43, as best seen in Figures 3 and 4. Preferably, a belt guide 44 extends lengthwise of the conveyor belt on the side opposite to the turning bar 29 to assure that the ejected capsules remain on the belt. Following ejection of the encapsulated product, the turning bar is returned to the position in which the throughbores are oriented vertically, the next pair of pin blocks is positioned beneath station 28 with the pins in axial alignment with collets 20 and the operations described above are repeated.

In summary, with reference to Figure 1, pin bars in pairs are successively delivered to pin lubrication station 16, to a gelatin bath 17 where the gelatin coating accumulates on the pins to form capsule halves, to a capsule drying station 18, thereafter to a capsule stripper station 19 where the capsule halves are stripped from the pins of the pair of pin blocks into the collet holders 20. The collet holders are then moved into position of alignment with the throughbores of the caplet holding means. The caplets having been delivered from the caplet dispensing means 30 which has deposited caplets in each of the throughbores 33. With the caplets oriented in the horizontal position in

axial alignment with the caplet halves within the collets 20, the push rods within the caplet holders press the capsule halves axially onto the caplets in each throughbore. Thereafter, the collets are returned to positions of axial alignment with the pins of the next set of pin blocks, and the encapsulated caplets are ejected from the turning bar for deposit on conveyor 42.

The equipment is simplified with respect to the prior art and extremely reliable. Since minimal handling of caplets is involved prior to encapsulation, very little dust is produced, and such dust as is produced can be conveniently evacuated by vacuum means in communication with each caplet chute. Since effective encapsulation depends to a large degree on the delivery of well formed caplets to the caplet holding means, encapsulation of defective caplets is difficult if not impossible. If no caplet is delivered due to a jamming of caplets within one of the chutes 30a, the caplet halves will not be joined together, and the two halves will simply be deposited on the conveyor belt where they will be readily detected. In either case, the encapsulation of broken caplets or parts of caplets or the deposit on the conveyor belt of empty caplets, both of which are difficult to detect by inspectors, are avoided.

It has further been found that when the capsule halves of a pair of capsule halves are differently colored, a sharp color line is maintained between the two capsule halves of an encapsulated product. This yields a more attractive end product and facilitates the use of different colors for color coding. Thus,

2141866

encapsulated product of smooth outer surface as illustrated in Figure 5 and having the capsule halves tightly adhered to the caplet is produced.

THE EMBODIMENTS OF THE INVENTION IN WHICH AN EXCLUSIVE PROPERTY OR PRIVILEGE IS CLAIMED ARE DEFINED AS FOLLOWS:

1. Equipment for the encapsulation of elongated caplets within a gelatin cover comprised of a pair of open-ended capsule portions of substantially identical cross-sectional dimension, said equipment comprising:

first holding means comprising an open-ended caplet support member adapted to receive a caplet to be encapsulated therein;

second holding means comprising a pair of collets for holding a pair of open-ended capsule portions with the open ends in spaced apart facing relationship;

means positioning said collets on opposite sides of said open-ended caplet support member in axial alignment with a caplet received therein; and

axially moveable means coaxially disposed within each of said collets and means for effecting movement of said axially moveable means a predetermined distance needed to advance said capsule portions from said collets into positions over a caplet held within said open-ended support member with the open ends of said capsule portions in abutting relationship with each other.

2. Equipment for the encapsulation of elongated, substantially cylindrical objects within a pair of substantially cylindrical capsule parts, each capsule part of

a pair having an open end dimensioned to fit onto one end of one of said substantially cylindrical objects, said capsule parts having the same inside and outside diameters and being of a length such that the pair of capsule parts encapsulates the cylindrical object with the open ends in abutting face-to-face relationship, said equipment comprising:

feed means for feeding said objects in end-to-end relationship;

rotatable object holding means for receiving said objects from said feed means and for presenting said objects in position for encapsulation, including a rotatable cylindrical member having at least one object receiving throughbore extending perpendicularly to a plane passing through the axis of rotation of the rotatable cylindrical member, said rotatable cylindrical member being rotatable from a first position in registry with said feed means in which said feed means deposits one of said objects in said object receiving throughbore and a second position;

capsule part holding means positioned in registry with the ends of said throughbore when the rotatable means is in said second position, said throughbore having a constant diameter substantially equal to the outer diameter of each of said capsule parts;

said capsule part holding means including moveable means for disposing said open-ended capsule parts in axial alignment with the axis of the throughbore when the rotatable means is

in said second position with the open end of each said capsule part oriented toward an end of the object to be encapsulated;

said capsule part holding means further including ejector means moveable to axially advance each said open-ended capsule part onto the object in said throughbore, said ejector means including a pair of ejector bars, each being moveable through a predetermined fixed distance sufficient to press the open end of said capsule parts over said object into abutting relationship with each other; and

means for moving said ejector bars through said predetermined fixed distances.

3. Equipment according to claim 2, wherein said means for moving said ejector bars further includes means for simultaneously moving said ejector bars through said predetermined fixed distances for advancing said open-ended capsule parts onto said objects.

4. Equipment according to claim 2 further including dryer means located upstream of said capsule part holding means for establishing a moisture content for said capsule parts of at least 18%.

5. Equipment for encapsulation of elongated substantially cylindrical objects within pairs of preformed open-end capsule parts, said capsule parts having

substantially identical cross-sectional dimension, said equipment comprising:

means for feeding said objects, said feed means including guides for maintaining said objects in at least one feed part in end-to-end relation;

first holding means adjacent to said feed means, said first holding means being adapted to receive said objects from said feed means;

moveable means for moving said first holding means for orienting said objects received from said feed means with their ends disposed on axes extending transversely of said object feed path;

second holding means for holding said opened-ended capsule parts, said second holding means including paired collets, said collets being moveable into positions of axial alignment with the elongated cylindrical objects with the open ends of the capsule parts facing opposing ends of an elongated cylindrical object positioned by said first holding means transversely of said object feed path; and

collet moving means for simultaneously advancing capsule parts held by said paired collets a predetermined distance towards each other, the predetermined distance being an amount sufficient to place the open ends of said capsule parts into abutting relationship with each other over said cylindrical objects.

6. Equipment according to claim 5, wherein said feed means comprises a plurality of tubular guide chutes spaced in side-by-side relationship and wherein first holding means includes a plurality of throughbores, each throughbore being disposed to receive an object from one of said tubular guide chutes.

7. Equipment according to claim 5, wherein said capsule parts are identically dimensioned half capsules.

8. Equipment according to claim 7, wherein said capsule parts have an internal diameter substantially equal to the outer diameter of said substantially cylindrical object.

9. Equipment according to claim 8 further including dryer means located upstream of said second holding means establishing a moisture content for said capsule parts of at least 18%.

10. Equipment according to claim 9, wherein said dryer means establishes a moisture content of between about 18% and about 20%.

11. Equipment for the encapsulation of medicament caplets within a gelatin cover comprised of a pair of open-ended capsule portions wherein said capsule portions are

substantially identical in cross-sectional dimension, said equipment comprising:

feed means for delivery of individual caplets in end-to-end relationship, said feed means including at least one discharge opening through which the caplets are discharged;

first holding means disposed adjacent said discharge opening, said holding means comprising a throughbore having a uniform diameter of dimension sufficient to receive said capsule portions and for receiving said caplets from said discharge opening;

second holding means, including paired collets, each collet being adapted to hold a capsule portion in one of said paired collets in facing relationship with the open end of a capsule portion in the other of said paired collets;

means for effecting relative movement of said first and second holding means whereby said first holding means is disposed between said paired collets with the ends of a caplet in the first holding means in alignment with the open ends of the capsule portions in the paired collets; and

collet moving means for advancing said capsule portions predetermined equal amounts into said throughbore, over the ends of said caplets, said predetermined amounts being sufficient to bring the open ends of said capsule portions into abutting relationship.

12. Equipment according to claim 11 further including means for maintaining the moisture content of the capsule portions in said collets at about 18% to 20%.

13. Equipment according to claim 12, wherein said feed means comprises plural guide chutes, said guide chutes being disposed in side-by-side relationship and each including a discharge opening through which caplets are discharged;

said first holding means including means for receiving caplets simultaneously from each of said discharge openings and for holding said plurality of caplets in side-by-side relationship;

said second holding means comprising paired collets for each of a pair of said capsule portions; and

said collet moving means comprising means for simultaneously advancing said pair of capsule portions from each collet of each pair over the ends of each caplet in said first holding means.

14. Equipment according to claim 13, wherein said first holding means comprises an elongated member having a plurality of caplet receptacles spaced apart in side-by-side relationship, each said receptacle being open at each end and being disposed beneath one of said guide chutes and having a first position of alignment with said one chute for receipt of a caplet from said chute, and means for moving said receptacles simultaneously from said first position to a

second position in which said receptacles are in alignment with the capsule portions in said paired collets.

15. Equipment according to claim 14, wherein said elongated member is rotatably mounted and said means for moving said receptacles comprises means for rotating said elongated member between first and second positions corresponding to the first and second positions of said receptacles, said receptacles being substantially horizontally disposed when in said second position.

16. Equipment according to claim 15, wherein said receptacles are in a substantially vertical position in said first position.

17. Apparatus according to claim 15, wherein said elongated member has a substantially cylindrical cross-section, an elongate support for said cylindrical member, said support closing the lowermost end of each of said receptacles when the receptacles are in said first position.

18. Equipment according to claim 17 wherein said elongated support member has a cylindrical bore extending lengthwise thereof and said elongated cylindrical member is fitted for relative rotational movement within said bore, said elongated support member having an upper surface having caplet receiving openings in registry with the uppermost ends of said

receptacles when the receptacles are in said first position for passage of caplets from the discharge openings of said guide chutes to the receptacles.

19. Equipment according to claim 18, wherein said elongated support further is provided with side walls having capsule portion receiving openings, said side wall openings being in registry with the ends of said receptacles to permit passage of the capsule portions through the openings and over the ends of caplets within the receptacles when the receptacles are in said second position.

20. Equipment according to claim 19 wherein said capsule portion in one collet of each pair of collets is of a color distinctly different from the color of the capsule half in the other collet of each pair.

21. A method for covering a caplet with gelatin capsule halves comprising:

providing a holding means for said caplet;

positioning said caplet in said caplet holding means to expose the caplet ends;

placing first and second hard-shell gelatin capsule halves of identical internal and external diameter onto the exposed ends of said caplet in abutting, but not overlapping relationship; and

permitting said capsule halves to dry to form a shrink-wrapped gelatin-shell caplet.

22. The method of claim 21, wherein said first and second gelatin capsule halves are of different colors.

23. The method of claim 21, wherein said step of permitting said capsule halves to dry comprising maintaining said capsule halves at about an 18% to about a 20% moisture content when placed on the exposed ends of said caplet.

24. The method of claim 23, wherein the step of placing the capsule halves on said exposed ends of said caplet comprises simultaneously moving said halves into abutting, but not overlapping relationship on said caplet.

25. A method of encapsulating elongated substantially cylindrical solid objects within a gelatin cover, said method comprising the steps of:

providing a substantially cylindrical solid object and a pair of hollow gelatin capsule portions, each capsule portion having an open end and a closed end and substantially identical internal and external cross-sections and an internal cross-section substantially equal to the cross-section of said substantially cylindrical solid object, the combined length of the pair of capsule portions being at least equal to the length of the object being encapsulated;

holding said object being encapsulated in position for encapsulation;

positioning a pair of capsule portions in alignment with the axis of the said object with the open ends of the pair facing toward the ends of said object; and

encapsulating said object by relatively moving said capsule portions of said pair onto said object and into a position in which said open ends of said pair are in abutting, but not overlapping relationship.

26. A method according to claim 25, further including the step of shrinking the capsule portions into a tight fitting relationship with the object.

27. A method according to claim 26, wherein the capsule portions are pre-moistened and dried on the object to reduce the moisture content to between about 10% and about 25%.

28. A method of encapsulation of an elongated cylindrical object within a pair of substantially cylindrical capsule parts, said method comprising providing a pair of capsule parts for each object, each part having an open end dimensioned to fit snugly onto one end of said cylindrical object;

holding said object in position for encapsulation;

aligning said capsule parts with the axis of the cylindrical object with the open end of each capsule part oriented toward one end of the object to be encapsulated; and

thereafter axially moving each said open-ended capsule part a predetermined distance onto the object until the open ends of said capsule parts are in abutting relationship, but not overlapping with each other.

29. A method according to claim 28, wherein each said capsule part is moved simultaneously through said predetermined fixed distance onto said object.

30. A method of encapsulating a caplet with gelatin capsule halves comprising:

placing first and second hard-shell gelatin capsule halves of identical internal and external diameter onto the ends of said caplet in abutting, but not overlapping relationship; and

permitting said capsule halves to dry to form a shrink-wrapped gelatin-shell caplet.

31. The method of claim 30, wherein said first and second gelatin capsule halves are of different colors.

32. The method of claim 30, wherein said step of permitting said capsule halves to dry comprising maintaining

said capsule halves at about an 18% to about a 20% moisture content when placed on the exposed ends of said caplet.

33. The method of claim 32, wherein the step of placing the capsule halves onto the ends of said caplets comprises simultaneously moving said halves into abutting, but not overlapping relationship on said caplet.

34. A method of encapsulation of elongated, substantially cylindrical, solid objects within a gelatin covering, said method comprising the steps of:

providing pairs of hollow gelatin capsule portions, each having an open end and a closed end, a substantially identical internal and external cross-section and an internal cross-section substantially equal to the cross-section of said substantially cylindrical, solid objects and each having a substantially identical outer profile, the combined length of the pair of capsule portions being at least equal to the length of an object being encapsulated;

feeding said objects to an object holding station;

depositing said objects at said holding station;

positioning said capsule portions with the open ends facing towards the ends of an object deposited at said holding station; and

encapsulating each said object deposited at said holding station by relatively moving said capsule portions onto said

object and into a position in which said open ends are in abutting relationship.

35. A method according to claim 34, including the step of drying the capsule portions on the object to reduce the moisture content of the gelatin covering from about 10% to about 25% when the object is encapsulated and thereafter continuing the drying to shrink the capsule portions into a tight fitting relationship with the object.

36. A method according to claim 34, wherein the capsule portions have a length substantially equal to one-half the length of the objects, the method further including the step of abutting the open ends of the capsule ends on a line extended substantially through the object midpoint.

37. A method of encapsulation of elongated, substantially cylindrical, solid objects within a pair of substantially cylindrical capsule parts, said method comprising;

providing pairs of capsule parts, each having an open end dimensioned to fit snugly onto one end of one of said substantially cylindrical objects, said capsule parts having the same inside and outside diameters and being of a length such that the pair of capsule parts encapsulates the cylindrical object with the open ends in abutting face-to-face relationship, said method comprising:

feeding said objects in end-to-end relationship;

receiving said objects fed in end-to-end relationship and presenting said objects in position for encapsulation;

thereafter holding said open-ended capsule parts in axial alignment with the axis of the cylindrical object with the open end of each said capsule part oriented toward an end of the object to be encapsulated; and

thereafter axially moving each said open-ended capsule part a predetermined distance onto the object until the open ends of said capsule parts are in abutting relationship with each other.

38. A method according to claim 37, wherein said capsule parts are moved simultaneously through said predetermined distance onto said objects.

39. A method according to claim 37, further including the step of drying said capsule parts prior to moving said capsule parts onto said object, said drying step establishing a moisture content for said capsule parts of at least 18% and no greater than about 25%.

40. A method of encapsulation of elongated substantially cylindrical, solid objects within a gelatin covering, said method comprising:

forming pairs of open-ended capsule parts each having a substantially identical internal end external cross-sectional

dimension with a hollow interior of cross-sectional dimension substantially equal to the objects to be encapsulated and having a combined length equal to that of said objects;

feeding said objects in at least one feed path in end-to-end relation;

positioning said objects fed through said feed path with their ends disposed on axes extending transversely of said object feed path;

moving said pairs of capsule parts into positions of axial alignment with the elongated cylindrical objects with the open ends of the capsule parts facing opposing ends of an object positioned therebetween; and

encapsulating an object positioned between said capsule parts by simultaneously moving the axially aligned capsule parts predetermined distances toward each other, the predetermined distance being the amount needed to place the open ends of said capsule parts into abutting relationship with each other.

41. A method according to claim 40, further including the step of regulating the moisture content in the gelatin capsule parts to between about 10% and about 25% when the capsule parts are fitted onto said objects.

42. A method according to claim 41, wherein said moisture content is maintained above about 20% and no greater than about 25%.

43. A method for the encapsulation of elongated caplets within a gelatin cover comprised of a pair of open-ended capsule portions of substantially identical cross-sectional dimension, said method comprising:

holding said caplets in an open-ended caplet support member;

holding said open-ended capsule portions with the open ends in spaced apart facing relationship;

positioning said open-ended capsule portions on opposite sides of said open-ended caplet support member in axial alignment with a caplet received therein; and

thereafter axially moving each of said capsule portions a predetermined distance needed to advance said capsule portions into positions over a caplet with the open ends of said capsule portions in abutting relationship with each other.

44. A method for the encapsulation of substantially cylindrical, solid medicament caplets within a gelatin cover, said method comprising:

providing pairs of open-ended capsule portions of substantially identical cross-sectional dimension and having a combined length as long as the caplets;

delivering individual ones of said caplets in end-to-end relationship to a caplet holding station;

receiving said caplets delivered in end-to-end relationship at said caplet holding station;

holding pairs of said capsule portions with the open ends of the capsule portions of a pair in facing relationship with each other;

effecting relative movement of each said caplet at said caplet holding station to dispose each of said caplets between a said pair of capsule portions, with the caplet ends in alignment and in facing relationship with the open ends of the capsule portions; and

advancing a said pair of capsule portions predetermined amounts onto said one of said caplets, said predetermined amounts bringing the open ends of said capsule portions into abutting relationship.

45. A method according to claim 43, further including regulating the moisture content of the pairs of capsule portions to about 18% to about 20% at the time of advancing the capsule portions onto said caplets.

46. A method according to claim 45, wherein said caplets are delivered in end-to-end relationship through a plurality of side-by-side feed paths;

receiving said caplets from each of said feed paths and holding said plurality of caplets in side-by-side relationship at said holding station; and

advancing said capsule portions over the ends of each caplet at said holding station.

47. A method according to claim 46, wherein said caplets are received at said holding station in substantially vertical positions.

48. A method according to claim 47, wherein one capsule portion of each said pair is of a color distinctly different from the other capsule portion of each said pair.

49. An encapsulated product comprising:

a solid caplet;

a first gelatin capsule part having an open end and a hollow interior of cross-section substantially equal to the cross-section of said caplet;

a second gelatin capsule part having an open end and a hollow interior of cross-section equal to the first;

said hollow interior of said first and second capsule parts having a combined length substantially equal to the length of said caplet; and

said capsule parts being fitted over said caplet and having said open ends in abutting relationship with each other.

50. An encapsulated product according to claim 40, wherein said capsule parts are substantially cylindrical and have substantially identical outer diameters.

51. An encapsulated product according to claim 50, wherein said capsule parts are of colors distinctly different from each other.

52. An encapsulated product according to claim 51, wherein said capsule parts are shrink fitted onto said caplet.

53. An encapsulated product according to claim 2, wherein said capsule parts have a moisture content in excess of about 18% when fitted over said caplet and a final moisture content of about 10% when stored and being characterized by about a 10% decrease in internal cross-sectional dimension at the lower moisture content, the capsule halves being substantially incapable of removal from the caplet when the encapsulated product is stored at the lower moisture content.

54. An encapsulated product according to claim 52, wherein said capsule parts are of substantially identical lengths.

55. An encapsulated product according to claim 54, wherein said product is a medicinal product.

56. A medicament comprising:

(a) a solid, generally cylindrical caplet with a longitudinal axis and having a first and a second end at opposite ends of said longitudinal axis;

(b) a first hard-shell gelatin capsule half shrink-wrapped on said second end of said caplet;

(c) a second hard-shell gelatin capsule half shrink-wrapped on said first end of said caplet and abutting, but not overlapping, said shrink-wrapped first hard-shell gelatin capsule half wherein said first and second hard-shell gelatin capsule halves have substantially the same diameter.

57. The medicament of claim 56, wherein said first and second shrink-wrapped capsule halves abut at about a midway point of said longitudinal axis of said medicament.

58. A medicament comprising:

(a) a solid caplet having a first and a second end, said caplet comprising a generally cylindrical shape;

(b) a first hard-shell gelatin capsule half of a first color shrink-wrapped on said second end of said caplet;

(c) a second hard-shell gelatin capsule half, of a color different from said first color, shrink-wrapped on said first end of said caplet and abutting, but not overlapping, said shrink-wrapped first hard-shell gelatin capsule half at about a midway point of a longitudinal axis of said medicament wherein said first and second hard-shell gelatin capsule halves have substantially the same diameter.

59. The medicament as defined in claim 58, wherein said first hard-shell gelatin capsule half has a first color and

said second hard-shell gelatin capsule half has a color different than said first color.

60. An encapsulated product comprising:

a solid, generally cylindrically shaped caplet with a longitudinal axis and having a first and a second end at opposite ends of said longitudinal axis;

first and second hard-shell gelatin capsule halves shrink-fitted on said first and second capsule ends; and

said shrink-fitted first and second gelatin capsule halves having substantially the same diameter and abutting but not overlapping each other.

61. The medicament as defined in claim 60, wherein said first hard-shell capsule half has a first color and said second hard-shell gelatin capsule half has a color different than said first color.

SMART & BIGGAR
OTTAWA, CANADA

PATENT AGENTS

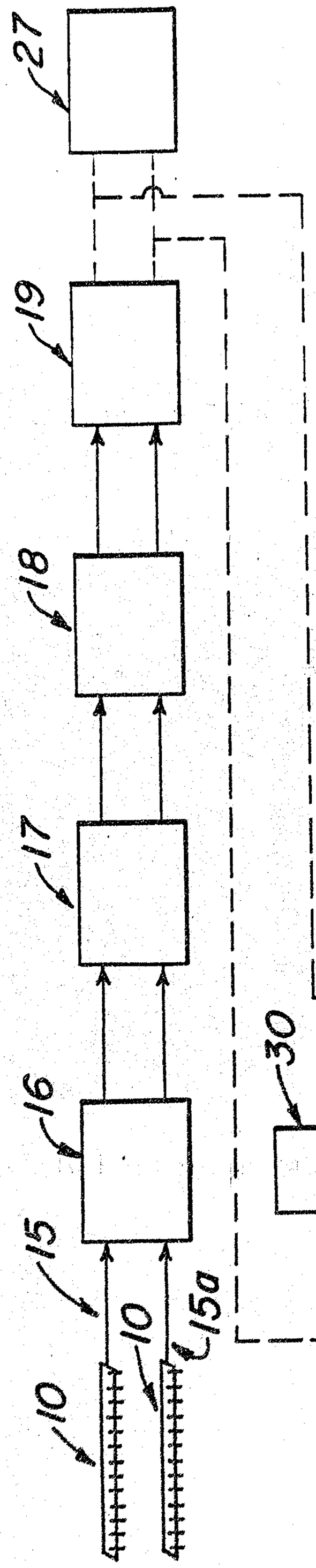
27
19
18
17
16
15
15a
10
10
42
+
20
43
30
28
20
42a
+

FIG. 1

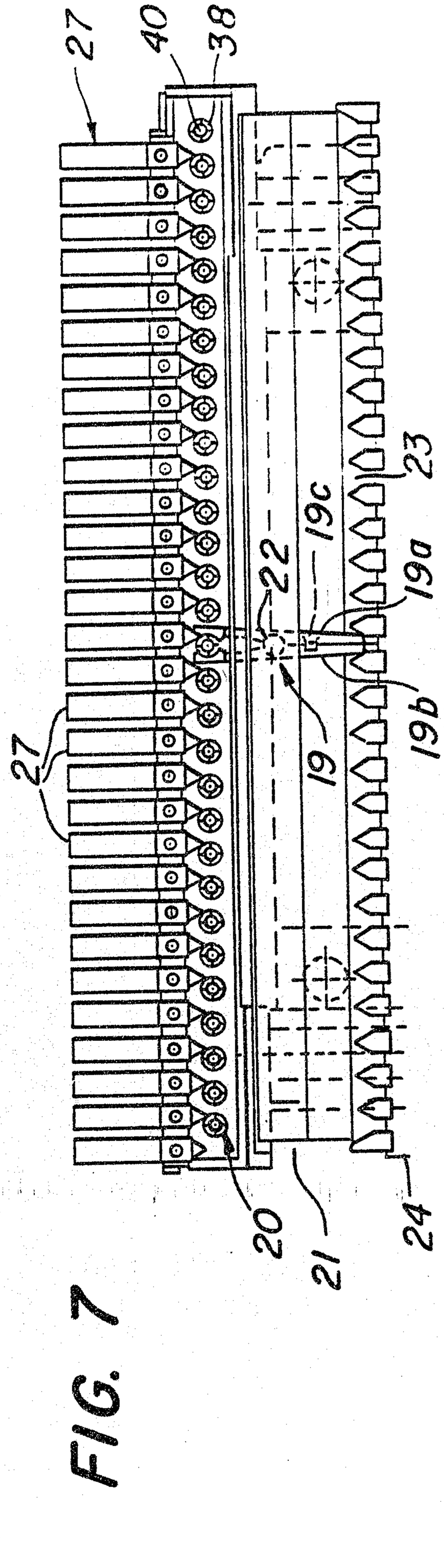
27
40
38
23
19c
22
19a
19b
19
27
20
21
24

FIG. 7

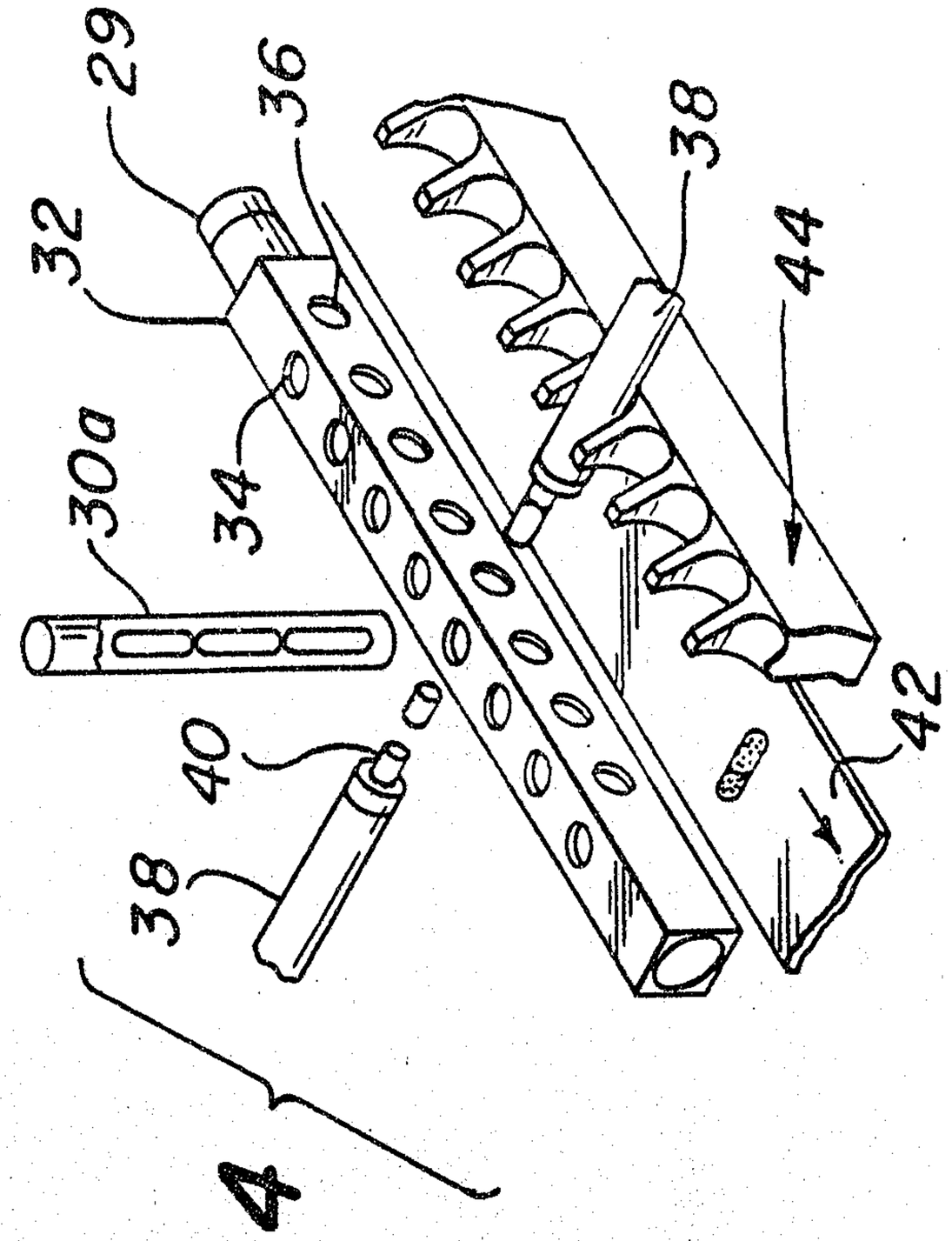
29
36
38
32
44
30a
34
42
40
38
4

FIG. 4

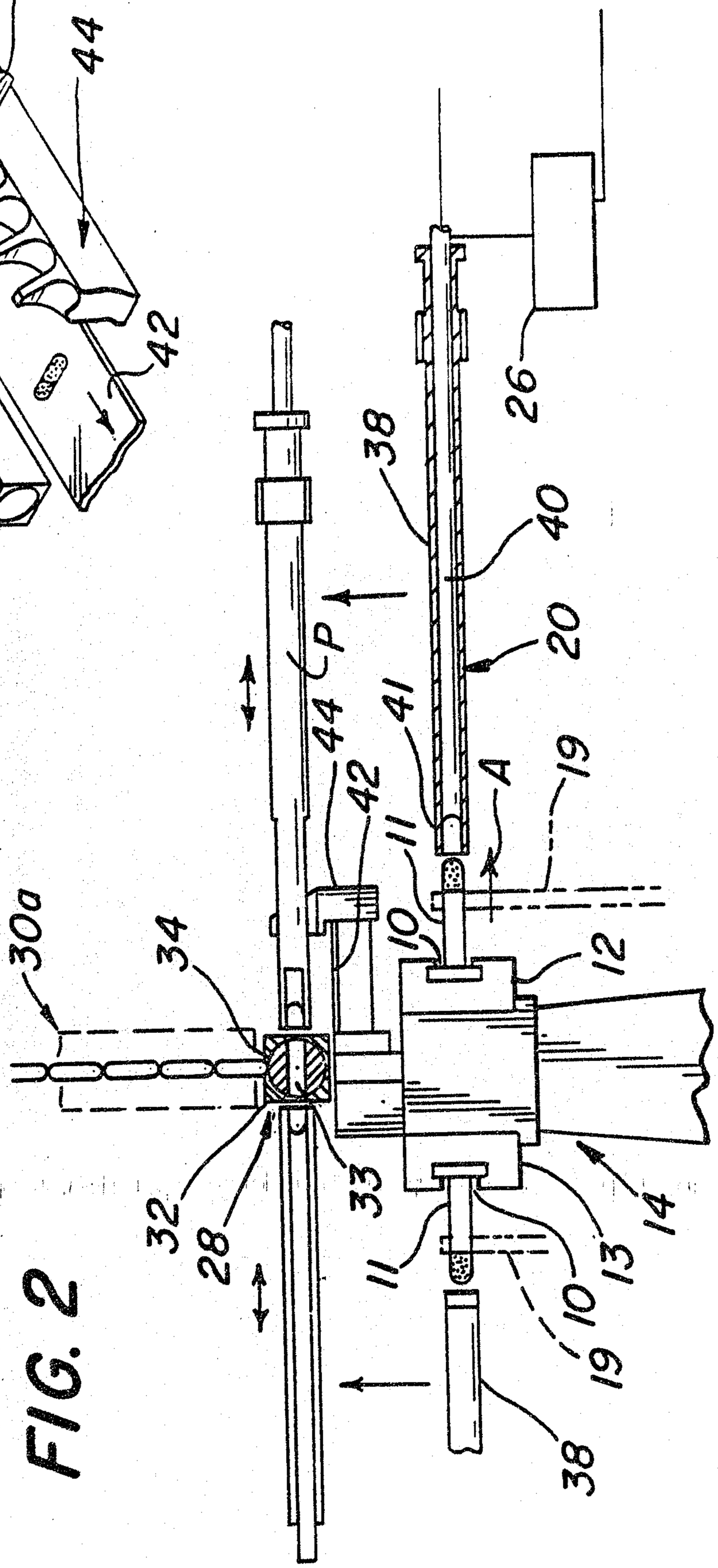
26
38
40
20
P
44
41
42
A
19
11
30a
34
10
12
32
28
33
13
14
38

FIG. 2

FIG. 3

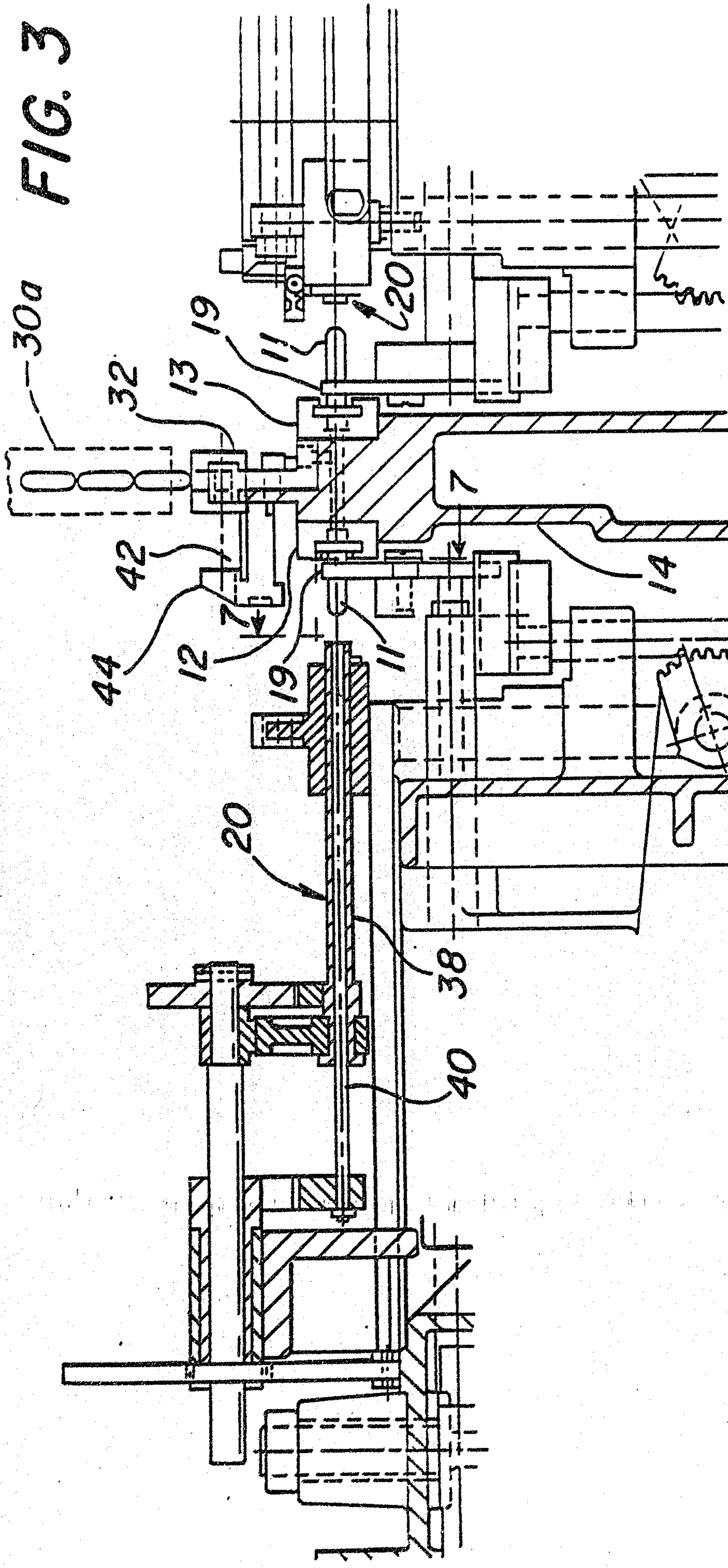

FIG. 5

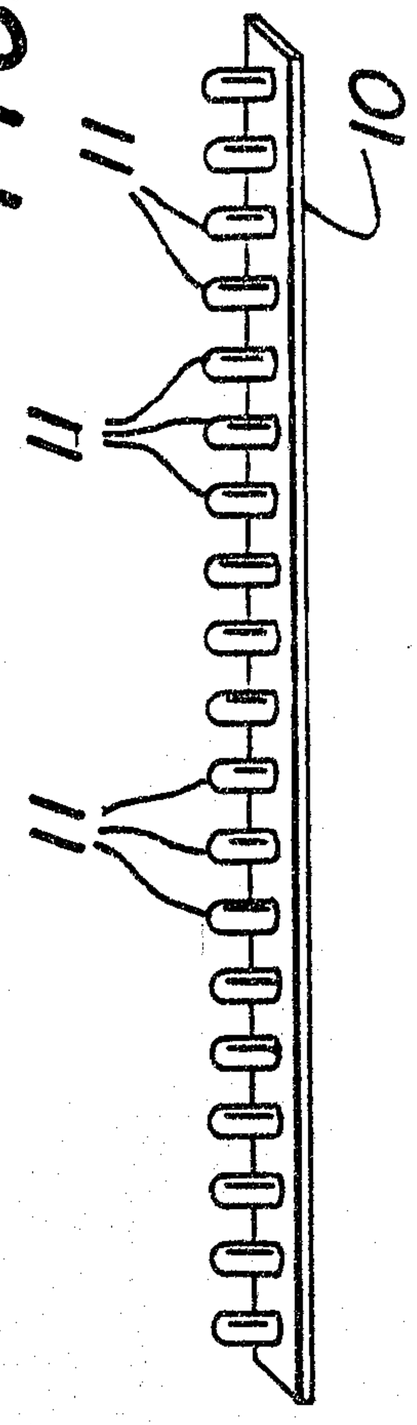

FIG. 6

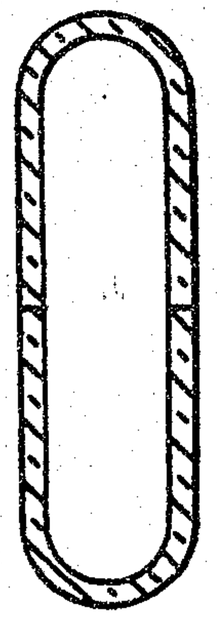

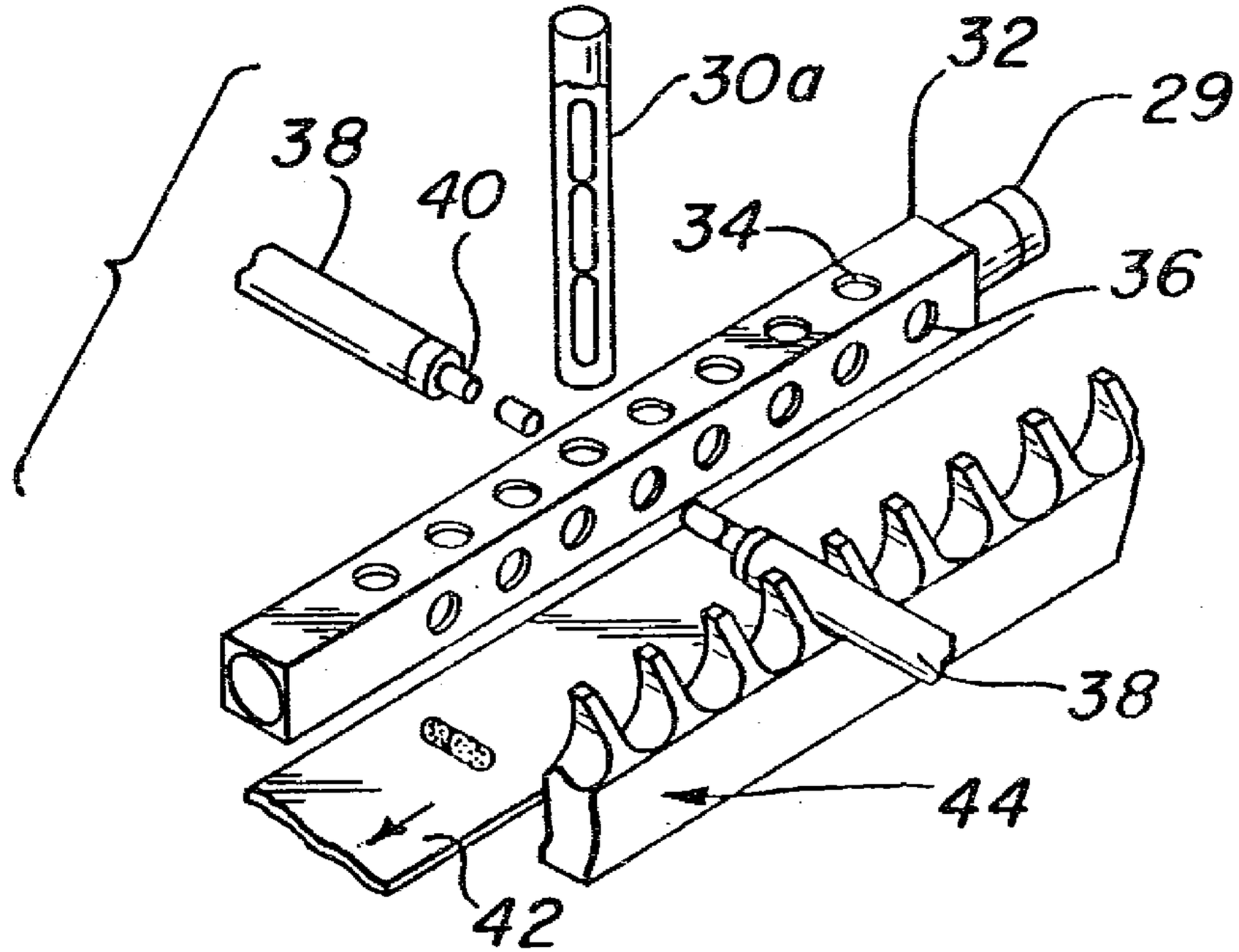
30a
32
29
38
40
34
36
38
44
42