(No Model.)

J. G. RITZ.

DEVICE FOR RAISING AND LOWERING BUGGY TOPS.

No. 564,393. Patented July 21, 1896.

Fig. 1.

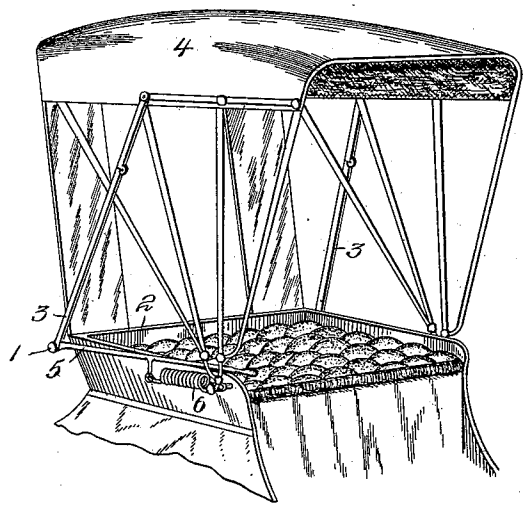

Fig. 2.

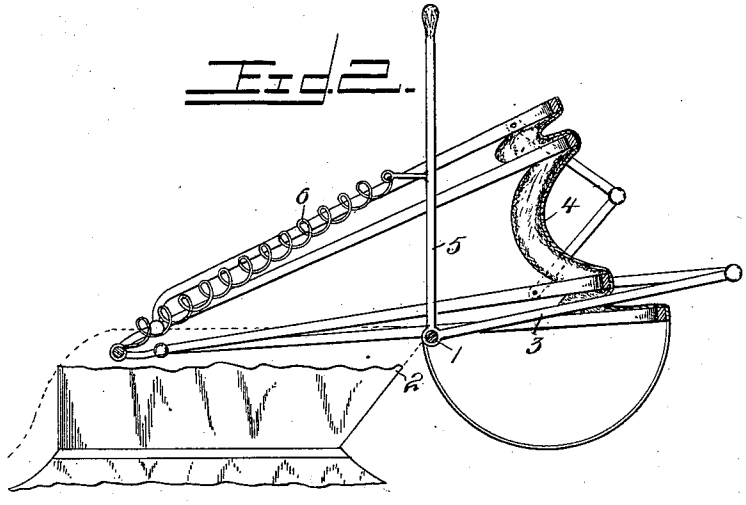

Inventor

James G. Ritz.

Witnesses

W. J. LaVarre,

H. F. Riley

By his Attorneys,

C. A. Snow & Co.

THE NORRIS PETERS CO., PHOTO-LITHO., WASHINGTON, D. C.

UNITED STATES PATENT OFFICE.

JAMES GEORGE RITZ, OF NEWBERG, OREGON.

DEVICE FOR RAISING OR LOWERING BUGGY-TOPS.

SPECIFICATION forming part of Letters Patent No. 564,393, dated July 21, 1896.

Application filed May 9, 1896. Serial No. 590,941. (No model.)

To all whom it may concern:

Be it known that I, JAMES GEORGE RITZ, a citizen of the United States, residing at Newberg, in the county of Yamhill and State of Oregon, have invented a new and useful Device for Raising and Lowering Buggy-Tops, of which the following is a specification.

The invention relates to improvements in devices for raising and lowering buggy-tops.

The object of the present invention is to improve the construction of devices for raising and lowering buggy-tops, and to provide a simple, inexpensive, and efficient one which will enable a buggy-top to be readily raised and lowered without necessitating the occupant of the vehicle changing his position.

A further object of the invention is to provide such a device which will counterbalance the weight of the buggy-top, so that it will require but little force to raise and lower it.

The invention consists in the construction and novel combination and arrangement of parts, hereinafter fully described, illustrated in the accompanying drawings, and pointed out in the claim hereto appended.

In the drawings, Figure 1 is a perspective view of a portion of a buggy provided with a device for raising and lowering the buggy-top, constructed in accordance with this invention. Fig. 2 is a sectional view illustrating the position of the parts when the buggy-top is lowered.

Like numerals of reference designate corresponding parts in both figures of the drawings.

1 designates a transverse rock-shaft journaled in suitable bearings at the back of a buggy-seat 2, and connected at its terminals with the lower sections of the rear or main braces 3 of a folding buggy-top 4, constructed in any suitable manner. The rock-shaft, which is provided with an operating-arm 5, is adapted to be partially rotated to swing the lower sections of the main or rear braces 3 to break the joints to lower the buggy-top, or to swing the lower sections of the braces upward to raise the top of the buggy.

The operating-arm of the rock-shaft is located at one end of the seat, in convenient reach of the occupant or operator, and in order to enable the buggy-top to be raised and lowered with but little force it is counterbalanced by a spiral spring 6. The spiral spring 6 is connected at one end to the operating arm at a point intermediate of the ends thereof, and its other end is connected with the buggy-seat, preferably at the joint or pivotal connection of the buggy-top, and as the top is lowered the spring is distended to support the weight of the same; and in raising the buggy-top the spring assists the operator. When the buggy-top is raised and is supported by the rear braces, the spring is relaxed and is subjected to no strain.

It will be seen that the device for raising and lowering buggy-tops is exceedingly simple and inexpensive in construction, and that it counterbalances the weight of the buggy-top and enables it to be easily and conveniently raised and lowered, and prevents the buggy-top from folding suddenly and injuring it or the buggy.

Changes in the form, proportion, and minor details of construction may be resorted to without departing from the principle or sacrificing any of the advantages of this invention.

What I claim is—

The combination with a buggy-top provided with a folding top, of a rock-shaft journaled in suitable bearings at the back of the seat and secured to and supporting the lower sections of the rear or main braces of the buggy-top, an operating-arm extending forward from the rock-shaft and rotated at one end of the seat, and a spiral spring secured at one end to the operating-arm, connected at its other end with the buggy-seat and adapted to counterbalance the weight of the buggy-top and assist in raising the same, substantially as described.

In testimony that I claim the foregoing as my own I have hereto affixed my signature in the presence of two witnesses.

JAMES GEORGE RITZ.

Witnesses:

W. T. MACY,

F. C. MILLS.