(12) INTERNATIONAL APPLICATION PUBLISHED UNDER THE PATENT COOPERATION TREATY (PCT)

(19) World Intellectual Property Organization
International Bureau

(43) International Publication Date
20 March 2014 (20.03.2014)

WIPO | PCT

(10) International Publication Number
WO 2014/040648 A1

(51) International Patent Classification:
E21B 21/06 (2006.01) *F28D 7/16* (2006.01)
F28F 19/00 (2006.01) *F28D 7/10* (2006.01)
F28G 13/00 (2006.01)

(21) International Application Number:
PCT/EP2012/068170

(22) International Filing Date:
14 September 2012 (14.09.2012)

(25) Filing Language: English

(26) Publication Language: English

(71) Applicant *(for all designated States except US)*: **STATOIL PETROLEUM AS** [NO/NO]; N-4035 Stavanger (NO).

(72) Inventors; and

(75) Inventors/Applicants *(for US only)*: **NES, Hroar Andreas** [NO/NO]; Lokes veg 14, N-7033 Trondheim (NO). **HOFFMANN, Rainer** [DE/NO]; Hans-Kleppensveg 24, N-3711 Skien (NO). **MARÅK, Knut Arild** [NO/NO]; Henrik Mathiesens vei 15, N-7015 Trondheim (NO). **GOPLEN, Stig** [NO/NO]; Veståsen 7, N-1362 Hosle (NO).

(74) Agent: **WEAVER, Richard**; Marks & Clerk LLP, Fletcher House (2nd Floor), Heatley Road, Oxford Science Park, Oxford Oxfordshire OX4 4GE (GB).

(81) Designated States *(unless otherwise indicated, for every kind of national protection available)*: AE, AG, AL, AM, AO, AT, AU, AZ, BA, BB, BG, BH, BN, BR, BW, BY, BZ, CA, CH, CL, CN, CO, CR, CU, CZ, DE, DK, DM, DO, DZ, EC, EE, EG, ES, FI, GB, GD, GE, GH, GM, GT, HN, HR, HU, ID, IL, IN, IS, JP, KE, KG, KM, KN, KP, KR, KZ, LA, LC, LK, LR, LS, LT, LU, LY, MA, MD, ME, MG, MK, MN, MW, MX, MY, MZ, NA, NG, NI, NO, NZ, OM, PA, PE, PG, PH, PL, PT, QA, RO, RS, RU, RW, SC, SD, SE, SG, SK, SL, SM, ST, SV, SY, TH, TJ, TM, TN, TR, TT, TZ, UA, UG, US, UZ, VC, VN, ZA, ZM, ZW.

(84) Designated States *(unless otherwise indicated, for every kind of regional protection available)*: ARIPO (BW, GH, GM, KE, LR, LS, MW, MZ, NA, RW, SD, SL, SZ, TZ, UG, ZM, ZW), Eurasian (AM, AZ, BY, KG, KZ, RU, TJ, TM), European (AL, AT, BE, BG, CH, CY, CZ, DE, DK, EE, ES, FI, FR, GB, GR, HR, HU, IE, IS, IT, LT, LU, LV, MC, MK, MT, NL, NO, PL, PT, RO, RS, SE, SI, SK, SM, TR), OAPI (BF, BJ, CF, CG, CI, CM, GA, GN, GQ, GW, ML, MR, NE, SN, TD, TG).

Published:

— *with international search report (Art. 21(3))*

(54) Title: PROCESSING FLUID FROM A WELL

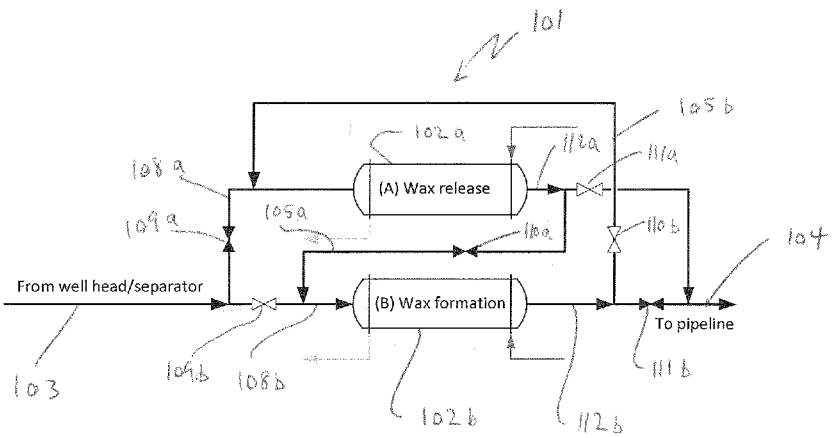

Fig. 2

(57) Abstract: Methods and apparatus for processing fluid from a well are described. A first wall portion may define a first region and a second wall portion may define a second region, fluid from said well being let through those regions. Heating of said first wall portion may be performed to release wax from said first wall portion into said fluid at said first flow region. During said heating, cooling of said fluid at said second flow region may be performed to cause wax from said fluid to deposit on said second wall portion.

WO 2014/040648 A1

Processing fluid from a well

Technical field

The present invention relates to methods and apparatus in particular for processing fluid from a well, in particular to prepare the fluid for long distance pipeline transport.

Background

Equipment carrying fluid from one location to another can be susceptible to fouling by wax. A layer of wax may deposit on walls facing the space inside the equipment in which such fluid is carried. Deposition of wax can be a particular problem in the oil and gas production industry, where wax may precipitate from a fluid from a well as it is carried through a pipeline away from the well and is cooled. In a subsea location, for example, the fluid from the well may have a temperature near the well head of around 80 to 120 degrees Celsius and may cool by transfer of heat via the walls of the pipe to the surrounding seawater to a temperature close to the temperature of the seawater, as the fluid is conveyed through the pipe.

This can be a particular issue where the fluid from the well needs to be transported long distances to a downstream processing facility or where significant cooling may otherwise occur between the well head and such a facility.

Deposits of wax can cause pipeline blockage which is undesirable.

In order to avoid or reduce wax deposits on the inner surface of pipes, techniques have been developed that seek to keep the temperature of the fluid above the threshold temperature at which wax precipitates from the particular fluid concerned i.e. the "Wax Appearance Temperature" of the fluid, all the way to the processing facility. Such techniques involve applying insulation and/or electrical heating to sections of the pipeline to keep the fluid sufficiently warm. However, techniques of applying insulation and/or heating may have drawbacks in terms of logistics and/or cost particularly where a pipeline is to extend large distances.

Solutions have been proposed in which the flow of fluid from the well is conditioned near the well head by deliberately generating wax which is then released from the wall and carried in the fluid in the form of wax particles, in a so-called “cold flow”, to a downstream facility. Once the wax is produced and then released into the fluid to form the cold flow, the wax is stabilized and tends not to deposit on the walls of the pipeline.

One such cold flow technique is described in the PCT patent publication WO2009/051495. In this technique, oil from a well may be cooled to a low temperature close to the ambient sea temperature (Tlow > Tsea) in a designated conditioner section of the pipeline and wax is allowed to form on the pipeline inner wall. Once in a while, the pipeline wall may be heated by application of a pulse of heat to the wall of the pipe. The heat pulse will melt a very thin layer of the wax at the wax/wall interface. The flow of oil in the pipeline will then tear the layer of wax off the wall, releasing it in solid form into the fluid. In this way, the wax, at least to the extent it is not melted by heating the wall, is stabilized and does not turn back to its original form after release from the heated wall so that it can travel in the oil over a long distance without re-depositing.

Summary of the invention

The inventors have noted potential improvements to the cold flow technique as described in for example WO2009/051495. For example, some of the deposited wax at the interface of the wax deposit with the pipe wall, may melt upon applying heat to the wall of the pipe. Any such melted wax may re-mix with the oil, and may eventually deposit at a location of the pipeline further downstream upon cooling.

Further, the heating period required to release wax into the flow may last for several hours and may be required to be applied at a frequency of around once per week, depending on the oil. During the heating period, the pipeline fluid will not be subjected to cooling (i.e. deliberate wax formation) in the designated conditioner section, and the oil will simply pass through that section without cooling and into the pipeline. Eventually, at some point along the pipeline downstream, the oil may cool and wax may deposit on a wall inside the pipeline. The pipeline may then require a removal operation such as pigging to remove the deposit at the relevant location.

Furthermore, the length of pipe section in which the flow is conditioned by cooling and application of heat pulses may depend on the fluid temperature, the wax appearance temperature of the fluid, pipe diameter and the heat transfer conditions in the pipe section. The length of this section can be significant, for example of the order of a few kilometres.

According to a first aspect of the invention there is provided apparatus for processing fluid from a well as set out in the claims appended hereto.

According to a second aspect of the invention there is provided a method of processing fluid from a well as set out in the claims appended hereto.

Each and any of the above aspects may include further features, as set out in the claims appended hereto or in the present description.

It will be appreciated that features mentioned in relation to any of the above aspects, whether in the claims or in the description, may be combined with each other, between the different aspects.

Description of the invention

There will now be described, by way of example only, embodiments of the invention with reference to the accompanying drawings, in which:

Figure 1 is a representation of apparatus for conditioning fluid from a well in accordance with an embodiment of the invention.

Figure 2 is a representation of apparatus for conditioning fluid from a well according to another embodiment of the invention;

Figure 3 is a representation of apparatus for conditioning fluid from a well according to another embodiment of the invention;

Figure 4 is a representation of apparatus for conditioning fluid from a well according to yet another embodiment of the invention;

Figure 5 is a representation of a layout of the apparatus with heat exchange devices as pipe-in-pipe segments in accordance with another embodiment of the invention; and

Figure 6 is a representation of a section of one of the pipe-in-pipe segments for Figure 5.

With reference firstly to Figure 1, the apparatus for conditioning fluid from the well is generally depicted at reference numeral 1. The fluid may comprise hydrocarbons such as oil and gas. The apparatus 1 in this example has four conditioners in the form of heat exchange devices 2a-2d, arranged in series. The apparatus 1 may be arranged subsea near a well head, so as to receive a flow of fluid from a well through an upstream pipe section 3. The fluid passes through the apparatus 1 and into a downstream pipe section 4. The apparatus 1 acts to condition the fluid contained in the flow, producing conditioned fluid. The downstream pipe section 4 is connected to a transport pipeline for transporting the conditioned fluid downstream to a processing facility (not shown).

The fluid from the well passes through each of the heat exchange devices 2a-2d between the upstream and downstream pipe sections 3, 4. Thus, each device has an outlet and inlet for fluid and a flow region defined therein and extending between the inlet and outlet, for the fluid to pass through the device. Typically, the device comprises a pipe having a pipe wall which defines the flow region therein. As can be seen in Figure 1, the outlet and inlet of successive devices are connected to each other by pipe sections 5a-5c. For example, the heat exchange device 2a is located upstream of device 2b, and the outlet of device 2a is fluidly connected via pipe section 5a to the inlet of heat exchange device 2b. Thus, the apparatus is arranged such that fluid from the well flows first into heat exchange device 2a, then out of the outlet of device 2a, through pipe section 5a and into the inlet of exchange device 2b.

In this way, the whole flow in the upstream pipe section 3 may be directed serially through each of the heat exchange devices into the downstream pipe section 4.

Each heat exchange device 2a-2d can be used for cooling the fluid contained in the flow region inside the device, in order to cause wax to precipitate from the fluid and be

deposited on the wall surface adjacent the flow region. The heat exchange device may comprise a pipe for carrying the fluid from the well and may have a heat exchange chamber surrounding the pipe for receiving a cooling fluid in order to cool the fluid from the well. More specifically, the chamber may be provided with a cold, cooling fluid which is passed through the chamber such that heat from the fluid contained inside the pipe is transferred across the wall of the pipe into the cooling fluid, resulting in cooling of the fluid from the well and production of wax onto the surface. The chamber may have an inlet and outlet for fluid, such that fluid can be circulated therethrough. For example, the first device 2a shown in Figure 1 has an inlet 6a and an outlet 7a for fluid to enter and exit the heat exchange chamber. Each of the other devices 2b to 2d may have a like inlet and outlet.

Each heat exchange device 2a-2d may also be used for heating the surface on which wax is deposited, in order to release previously deposited wax from that surface. The heat exchange devices are typically configured to operate alternately to perform cooling or heating. The heating may be performed by circulating a hot or heated fluid (having a temperature higher than the fluid in the flow region) through the heat exchange chamber to heat the wall of the pipe. Alternatively, an electrical heating means could be provided to supply heat to the pipe wall.

Each heat exchange device 2a-2d may take the form of a tube-and-shell heat exchanger which may comprise straight tubes or tubes with sections bent back on each other or coiled, though which fluid from the well may be passed through the device between an inlet and outlet of the tube. The tube may be located within an outer shell defining the heat exchange chamber between the shell and the wall of the tube for receiving cooling or heating fluid. This arrangement helps to provide a high surface area for heat transfer between the well fluid inside the tube and the cooling or heating fluid surrounding the tube.

Alternatively, the device may comprise a pipe-in-pipe arrangement where fluid from the well is conveyed through an inner pipe defining the flow region therein, and an outer pipe is provided around the inner pipe defining in effect a heat exchange chamber in the region between the inner and outer pipes. The outer pipe may have open ends, and the device may be arranged to direct seawater into one end, through the region

defined between the pipes, and out of the other end, such that the seawater provides cooling of the fluid contained inside the inner pipe.

In practice, the apparatus is used to produce wax and cause wax to be deposited on an inside wall between the upstream and downstream pipe sections. The apparatus is further used to release the deposited wax intermittently into the fluid to form a stabilised flow, i.e. containing stabilised wax, which enters into the downstream pipe section 4.

The heat exchange devices are configured to cooperate so that when wax is being released at one of the devices, cooling is provided by another. This is done to ensure that the fluid is properly conditioned with wax put into solid, stabilized form before entering the downstream section 4. Thus, it reduces the possibility of fluid entering the downstream section 4 without stabilising wax, and of fouling the pipeline further downstream during periods of heating.

Typically, each device is operated periodically in heating or cooling mode. In Figure 1, the apparatus 1 is shown during operation with the devices 2a, 2c and 2d in cooling mode in order to stabilise and produce wax, whilst device 2b is in heating mode to release stabilised wax from the wall.

The fluid received in device 2b from the upstream device 2a comprises treated fluid from which wax has been stabilised and deposited (at device 2a). At device 2b, during the period of heating, wax is released into the treated fluid from device 2a. Devices 2c and 2d provide further cooling of the fluid to help remove and stabilise wax.

Once wax has been released into the fluid at device 2b, this device may be switched to cooling mode to generate a fresh deposit of wax therein, whilst another device for example device 2c, is switched to heating mode to release deposited wax in that device.

The sequence and operation of the devices in heating or cooling modes may be controlled according to a computer program, or according to the level of wax build up in different devices.

In certain embodiments, the heat exchange devices may be piggable in order to remove any wax deposited inside those devices. The apparatus could have a pigging device for launching pigs into the devices and/or pipeline to inspect and clean the apparatus internally during operation and remove wax.

In Figure 2, a second apparatus 101 is shown. Reference numerals as those of Figure 1 but incremented by one hundred are used in Figure 2 to denote like features to those of the apparatus of Figure 1. In Figure 2, two conditioners 102a, 102b are used where one of the devices performs cooling to deposit stabilized wax whilst the other device releases deposited wax. Here, the apparatus is shown during operation with the conditioner 102b in cooling mode and the conditioner 102a in heating mode.

The flow of fluid in the upstream section 103 can be directed in whole to either of the devices 102a and 102b via inlet pipe sections 108a, 108b by use of controllable flow valves 109a, 109b on the respective inlet pipe sections 108a, 108b. Note that the non-solid flow valve symbol (c.f. valve 109b) denotes an open valve through which fluid may flow, whilst the solid valve symbol (c.f. valve 109a) denotes a closed valve through which fluid may not flow.

The devices 102a and 102b are also connected to each other so that the outlet of either device is connected through connecting sections 105a, 105b to the inlet of the other. Flow of fluid out of each of the devices 102a, 102b can be directed through either of the connecting sections by use of controllable valves 110a, 110b on the respective connecting sections 105a, 105b, and controllable flow valves 111a, 111b on outlet pipe sections 112a, 112b which lead out of the respective devices 102, 102b.

During a first phase of operation of the apparatus as shown in Figure 2, valve 109a is closed and valve 109b is open such that fluid from the well enters into the heat exchange device 102b in which the fluid is cooled. Wax is deposited on the wall portion defining the flow region inside the device 102b. Treated fluid exits the device 102b through outlet pipe section 112b. The valve 111b is closed and valve 110b is open, to direct fluid through connecting section 105b and into the inlet of the device 102a. The wall portion defining the flow region for fluid inside the device 102a is heated to release deposited wax from the wall into the treated fluid from device 102b. It will be noted that the deposited wax may have deposited from an earlier operational

phase of the apparatus during which the device 102a was operated in cooling mode. The fluid exits the device 102a through outlet pipe section 112a. The flow valve 111a is open and 110a is closed such that fluid is directed onwards into the downstream pipe section 104.

It will be appreciated that once wax has been removed from 102a and it is desired to release wax from 102b, the device 102a may be switched to cooling mode, and device 102b switched to heating mode. The apparatus may then enter a second phase of operation (not shown), where the valves are switched to their opposite state (open or closed). In the second phase, the apparatus may operate in the same way as in the first phase, but with the heating or cooling role of the devices 102a and 102b swapped. In outline, the fluid from the well will enter in whole into the device 102a and progress through connecting section 105a into the inlet of device 102b and through outlet section 112b and valve 111b to the downstream pipeline 104.

In this way, the fluid that is used to tear off wax from the wall portion inside the relevant device 102a, 102b, previously has been treated and cooled to Tlow and wax stabilized.

Turning now to Figure 3, there is shown apparatus 201 for conditioning a flow of fluid from a well. The same reference numerals to those of Figure 2 but incremented by one hundred are used in Figure 3 to denote like features to those of the apparatus of Figure 2. In this example, three conditioners 202a, 202b and 202c are used. Fluid from the well is split into selected devices. In the operational phase shown in Figure 3, fluid from the well enters into the heat exchange devices 202b and 202c. Valves 209a-209c provided on inlet pipe sections 208a, 208c are used to direct the fluid into the appropriate conditioners. As indicated, the valve 209a is closed, and valves 209b and 209c are open.

The devices 202a, 202b and 202c are connected to each other so that:

1) the outlet of device 202a is connected through connecting pipe section 205a, to the inlet of the device 202c;
2) the outlet of device 202b is connected through connecting pipe section 205b, to the inlet of device 202a; and
3) the outlet of device 202c is connected through connecting pipe section 205c to the inlet of device 202b.

Flow of fluid out of each of the devices 202a, 202b and 202c can be selectively directed through the connecting sections 205a-205c by use of controllable valves 210a-210c on the respective connecting sections 205a-205c and controllable flow valves 211a-211c on outlet pipe sections 212a-212c which lead out of the respective devices 202a-202c.

The heat exchange devices 202b and 202c act to cool the fluid received in the flow regions thereof. This generates wax and causes deposition of the wax on the wall adjacent to the fluid received therein. Treated fluid is produced from each of these devices. The treated fluid from the heat exchange device 202c flows along a first flow path through valve 211a directly into the transport pipeline 204, valve 210c being closed and valve 211a being open. The treated fluid from the heat exchange device 202b flows along a second, different flow path through valve 210b and connecting section 205b into the exchange device 202a, valve 210b being open and valve 211b being closed. The heat exchange device 202a acts to heat a wall therein on which wax is deposited, to release the deposited wax from the wall. Such wax may have been deposited in an earlier operational phase. The wax is released in solid and stabilised form into the treated fluid. The treated fluid with released wax flows out of the device 202a continuing along the second flow path through the valve 211a and pipe section 212a into the downstream pipe section 204, with valve 211a open and valve 210a closed.

It will again be appreciated that once wax has been removed from the device 202a, the apparatus may move to second and/or third phases of operation (not shown), where one of the devices 202b and 202c is used to perform heating to release wax, whilst the others are used to perform cooling.

In a second phase for example, the device 202b may perform heating, and fluid from the well enters into the devices 202a and 202c. Fluid from 202a is directed through valve 211a directly into the downstream pipe section 204 (valves 211a open and valve 210a closed). Treated fluid from device 202c is directed into the device 202b (valve 210c open, valve 211c closed) where it receives released wax, and the treated fluid and released wax flows out of the device 202b (valve 210b closed, valve 211b open) into the downstream pipe section 204.

In a third phase of operation of the apparatus, the device 202c may perform heating, and fluid from the well enters into the devices 202a and 202b (valve 209a and 20b open, valve 209c closed). Fluid from 202b is directed through valve 211b directly into the downstream pipe section 204 (valves 211b open and valve 210b closed). Treated fluid from device 202a is directed into the device 202c (valve 210a open, valve 211a closed) where it receives released wax, and the treated fluid and released wax flows out of the device 202c (valve 210c closed, valve 211c open) into the downstream pipe section 204.

Turning now to Figure 4 there is shown a yet further example apparatus 301 for conditioning a flow of fluid from a well. The same reference numerals to those of Figure 3 but incremented by one hundred are used in Figure 4 to denote like features to those of the apparatus of Figure 3.

In this example, three conditioners 302a, 302b and 302c are used and are interconnected in the same way as the heat exchange devices 202a-202c of Figure 3. However, in the first operational phase as shown in Figure 4, a portion of the fluid from device used for heating flows through valve 310a and connecting pipe section 305a into the device 302c (valves 310a and valve 311a are open). This helps to solidify/stabilise and remove, by cooling in device 302c, any wax which may have melted and re-entered the fluid upon heating in the device 302a.

Similarly in the second operational phase (not shown) in which the heating is performed by device 302b (and the others cool), the valves 310b and 311b are open to direct a portion of fluid from the device 302b into the device 302a. In the third operational phase (not shown) in which the heating is performed by device 302c (and the others cool), the valves 310c and 310c are open to direct a portion of fluid from the device 302c into the device 302b.

In a variant, valves 310b and valve 311b are open or part open in the first operational phase so that a portion of the fluid from the device 302b used for cooling flows through valve 310b and connecting pipe section 305b into the device 302a, whilst the rest of the fluid from device 302b goes directly to the pipeline 304. In the other operational phases, the cooling device upstream of the heating device may be configured

equivalently by opening valves 310a, 311a or valves 310c, 311c to direct part of the flow from its outlet to the heating device and the rest directly to the pipeline.

In another embodiment using three heat exchange devices, the devices may be operated to direct fluid consecutively through the devices, along one flow path. In such an embodiment, using the reference numerals of Figure 4, in a first operational phase, fluid is received in the device 302c from the well, valve 309c being open and valves 308a and 308b being closed. The device 302c is operated to perform cooling of the fluid. The device 302b receives fluid from the device 302c via connecting pipe 305c, valve 310c being open and valve 311c being closed. The device 302b is operated to heat the wall section adjacent to the fluid to release previously deposited wax into the fluid. The third device 302a in this example receives fluid from the device 302b via connecting pipe 305b, valves 310b being open and 311b being closed. The device 302a is operated to cool the fluid received therein. Fluid from the device 302a is directed via pipe 312a to an outlet of the apparatus, e.g. at the downstream pipe section 304 near the entrance to the transport pipeline, the valve 311a being open and valve 310a being closed.

The wall section in device 302c is cooled and does the bulk wax precipitation. The temperature of the fluid output from the device 302c does not need to be very close to the sea temperature (when the sea is providing the cooling). At the same time as releasing stabilized wax from the wall section in 302b into the fluid, the fluid will inevitably be modestly heated. In the device 302a which provides further cooling, only the non-stabilized wax will precipitate here and deposit on the wall section, whilst the rest (stabilized wax) will go to the pipeline.

In this example, the fluid from the well is subjected to devices operating in the sequence of cooling-heating-cooling. It will be appreciated that in other phases of operation, the heating can be performed by the device 302a or 302c with the others providing cooling. The valves can be operated accordingly to direct fluid firstly into one of the devices performing cooling, then into the device performing heating, and therefrom to another device performing cooling, in order to maintain the sequence. This sequence ensures that the fluid is always is released to the pipeline at the coldest

achievable temperature. It can also help to reduce the equipment size, as the overall cooling is provided in two wall sections.

In the various embodiments described herein, the apparatus may operate in different operational phases, wherein in each such phase the heating and wax release is provided in a different device (heating phases). In practice, there may be a further operational phase in which all devices provide cooling (cooling phase). The apparatus may therefore be operable to change between any heating phase, as described above, and the cooling phase. Once all stabilized wax is removed in the device which is performing heating, it goes into cooling mode where all devices perform cooling. This cooling phase may in fact represent the usual mode of operation, in which the apparatus most of the time operates. After a period of time in the cooling phase, a heating phase is entered, in which heating is performed by one of the devices, typically a different device to that used for heating in the previous heating phase, where there may be a greater need for wax release. It may only be necessary to perform a heating for a short period of time (few hours) once or twice every month.

In the embodiments described, it will be appreciated that the fluid from the well may be conveyed along one or several flow paths between the upstream pipe section (inlet to apparatus) and the downstream pipe section (outlet). Such flow paths may be defined by the regions in which fluid is contained inside the devices. For example, in Figures 1 and 2, the heat exchange devices are arranged to receive fluid from the well at different locations along the same flow path; fluid passes successively from one device to the next. In Figures 3 and 4, a first portion of the fluid from the well is conveyed through the device 202c, 302c along one path, whilst a second portion of the fluid is conveyed through devices 202a, 302a and 202b, 302b along another path to the downstream pipe section. Thus, the devices may in certain embodiments be arranged at different locations and/or on different flow paths. Figure 4 also provides an example of the fluid output from one device being divided and carried onward on two paths (e.g. through open valves 310a and 311a).

It may be noted that the precise distance of the apparatus from the well may be varied. However, if well stream temperature is high, there can be greater freedom to place the apparatus in a location at which the fluid temperature approaches the wax appearance temperature.

A practical layout example is shown in Figures 5 and 6 for a pipe-based wax control unit. The apparatus 402 comprises heat exchange devices 402a-c, for cooling and heating each in the form of pipe-in-pipe segments, each of length 1-2 km. Each pipe-in-pipe segment comprises an outer pipe 414a-c, which surrounds an inner pipe 415a-c defining an annular chamber therebetween. An electrical heating cable 416a-c for heating the wall of the inner pipe for releasing wax is provided along the wall of the inner pipe. Cooling is provided by pumping seawater, which may have a temperature of between 0 and 6 degrees Celsius at the seabed, through the annular chamber of the segment (surrounding the inner pipe). The cooling provided through these sections may stabilize the wax and fluid fully prior to the flow entering into the pipeline from the downstream pipe section 404, at which point the fluid temperature may be close to the seawater temperature. The apparatus has a power supply 420 for supplying power to each of the heating cables 416a-c via supply cabels 421a-c, and pumps 423a-c to take in and pump seawater via spools 422a-c through the annular chambers of the respective segments. As indicated in Figure 6, each segment may also have a corrosion protective external cladding 417a-c applied around the outside of the inner pipe and a corrosion protective internal cladding 418a-c applied on the inside of the outer pipe. These claddings line the respective inner and outer pipes, to provide corrosion protection from fluid in the annular space between the inner and outer pipes. A protection and external corrosion coating 419a-c is applied to the outside of the outer pipes 414a-c.

In other variants, cooling and heating may be based on using conventional heat exchangers as heat exchange devices.

Pipe-in-pipe arrangements may typically be less complex compared to those using conventional heat exchangers and can be self-supporting. As can be seen in Figures 5 and 6, the pipe-in-pipe variant may use electrical cables (direct heating, induction heating, heat tracers) for providing the heat pulse. The pipe-in-pipe layout allows for pigging of the wax control unit itself.

Conventional heat exchangers may give a compact layout that can be installed on a supporting structure/template, and installation may be easier than for pipe-in-pipe

segments. Application of a heat pulse by means of hot water circulation may be preferable in conventional heat exchangers.

Direct seawater cooling could be used for a pipe-in-pipe arrangement, as shown in Figure 5, and is in general an efficient way to provide cooling. Indirect seawater cooling of a closed fresh water loop which in turn is in a heat exchange relationship with the hydrocarbon flow line is also a possibility and may reduce corrosion/material concerns which may be associated with direct cooling, particularly in the case of conventional heat exchangers.

There are a number of advantages to the present invention. The arrangements shown using a plurality of heat exchanger devices to provide cooling in one unit while heating to release wax is performed in another. This significantly reduces the non-stabilised wax content of the fluid entering into a transport pipeline. This provides maintenance and cost benefits. By operating heat exchange devices to perform both heating and cooling and doing so in parallel configurations, a significant reduction in non-stabilised wax content can be obtained over a limited distance from a well.

In arrangements using more than two devices less wax will enter the pipeline downstream. Such arrangements also provide useful operational redundancy, allow for smaller heat exchangers, and a reduced power demand and need for intervention and maintenance during operation.

Various modifications and improvements may be made without departing from the scope of the invention which is described herein. It can be noted for example that the apparatus may include more than three heat exchange devices, as many as desired, to provide good wax removal prior to said fluid entering a pipeline downstream for long distance transport.

CLAIMS

1. Apparatus for processing fluid from a well, the apparatus comprising:

a first wall portion adjacent a first region;

a second wall portion adjacent a second region;

said first and second regions arranged to let fluid pass therethrough;

the apparatus being arranged to heat said first wall portion to release wax from said first wall portion into said fluid at said first region; and being further arranged to cool said fluid at said second region, during said heating of the first wall portion, to cause wax from said fluid to deposit on said second wall portion; and

an outlet arranged to receive therein said fluid from said first and second regions.

2. Apparatus as claimed in claim 1, wherein said second region is arranged to receive said fluid from the first region.

3. Apparatus as claimed in claim 1, wherein said first region is arranged to receive said fluid from the second region.

4. Apparatus as claimed in claim 1 arranged to switch between a first mode of operation in which said second region is arranged to receive said fluid from the first region and a second mode of operation in which said first region is arranged to receive fluid from said second region.

5. Apparatus as claimed in any preceding claim further comprising a third wall portion adjacent a third region, the first, second and third regions being arranged to let said fluid pass therethrough, said outlet being arranged to receive said fluid from said first, second and third regions.

6. Apparatus as claimed in claim 5, wherein said second region is arranged to receive said fluid from the first region, and said third region is arranged to receive said fluid from said second region.

7. Apparatus as claimed in claim 5, wherein said first region is arranged to receive said fluid from said second region, and said third region is arranged to receive said fluid from said first region.

8. Apparatus as claimed in any preceding claim having a first heat exchanger which includes said first wall portion, said first heat exchanger being configured to heat the first wall portion.

9. Apparatus as claimed in claim 8, wherein said first heat exchanger is operable in one configuration to perform said heating and in another configuration to cool said fluid to cause wax to deposit on said first wall portion.

10. Apparatus as claimed in claim 8 or claim 9 having a second heat exchanger which includes said second wall portion, said second heat exchanger being configured to cool the well fluid at the second wall portion during said heating of the first wall portion.

11. Apparatus as claimed in claim 10, wherein said second heat exchanger is operable in one configuration to perform said cooling and in another configuration to heat said second wall portion to release wax from the second wall portion into said fluid.

12. Apparatus as claimed in any of claims 8 to 11 when dependent on any of claims 5 to 7, having a third heat exchanger which includes said third wall portion, said third heat exchanger being configured to cool the well fluid at the third wall portion during heating of the first wall portion.

13. Apparatus as claimed in claim 12, wherein the third heat exchanger is operable in one configuration to perform said cooling at the third wall portion and in another configuration to heat said third wall portion to release wax from the third wall portion into the fluid.

14. Apparatus as claimed in any of claims 8 to 13 wherein:

in a first mode of operation of the apparatus, said first heat exchanger is arranged to heat said first wall portion to release wax from the first wall portion into said

fluid; and said second heat exchanger is arranged to cool said fluid to cause wax to deposit on said second wall portion.

15. Apparatus as claimed in claim 14, wherein:

in a second mode of operation of the apparatus, said first heat exchanger is arranged to cool said fluid to cause wax to deposit on said first wall portion; and said second heat exchanger is arranged to heat said second wall portion to release pre-deposited wax from the second wall portion into said fluid.

16. Apparatus as claimed in claim 14 or 15, when dependent on claims 12 or 13, wherein in both the first and second modes, the third heat exchanger is arranged to cool said fluid to cause wax to deposit on said third wall portion.

17. Apparatus as claimed in claim 15 or 16, wherein:

in a third mode of operation of the apparatus, said first and second heat exchangers are each arranged to cool said fluid to cause wax to deposit in respective first and second wall portions, and said third heat exchanger is arranged to heat said third wall portion to release wax into said fluid.

18. Apparatus as claimed in any of claims 14 to 17, wherein:

in a fourth mode of operation of the apparatus, each heat exchanger is arranged to cool the fluid to cause wax to deposit on the respective wall portions.

19. Apparatus as claimed in any of claims 15 to 18 arranged to be switched between any of:

i. the first and second modes of operation;
ii. the first and third modes of operation;
iii. the second and third modes; or
iv. the fourth mode and any of the first to third modes.

20. Apparatus as claimed in any of claims 14 to 19, wherein in the first mode of operation, a first amount of said fluid is supplied from the first region to the third region, and a second amount of said fluid is supplied from the first region to the outlet.

21. Apparatus as claimed in any of claims 8 to 20, wherein the first, second and/or third heat exchangers comprises a first, second and/or third pipe which comprises said first, second and/or third wall portion, and wherein said first, second and/or third region is defined within said pipe.

22. Apparatus as claimed in claim 21, wherein said heat exchanger comprises a heat exchange chamber surrounding said pipe, said heat exchange chamber arranged to receive heat exchange fluid, for transferring heat across said wall portion between said fluid and the heat exchange fluid.

23. Apparatus as claimed in claim 22, comprising a shell surrounding said pipe to define said chamber.

24. Apparatus as claimed in claim 22 or claim 23, wherein in a cooling configuration, said heat exchange fluid comprises a coolant.

25. Apparatus as claimed in any of claims 22 to 24, wherein in a heating configuration, said heat exchange fluid comprises a heated fluid.

26. Apparatus as claimed in claim 24, wherein said coolant comprises seawater.

27. Apparatus as claimed in any preceding claim arranged subsea.

28. Apparatus as claimed in any preceding claim, said cooling performed to cool said fluid to a temperature below a wax appearance temperature for said fluid.

29. Apparatus as claimed in any preceding claim, arranged to supply said fluid from the outlet into a subsea pipeline connecting the apparatus to a downstream facility.

30. A method of processing fluid from a well, the method comprising:

a. providing a first wall portion defining a first region, and a second wall portion defining a second region;

b. supplying said fluid through said first and second regions;

c. heating said first wall portion to release wax from said first wall portion into said fluid at said first region;

d. during the process of step c, cooling said fluid at said second region to cause wax from said fluid to deposit on said second wall portion;

e. receiving said fluid from said first and second regions in an outlet.

31. A method of processing fluid from a well performed using the apparatus as claimed in any of claims 1 to 29.

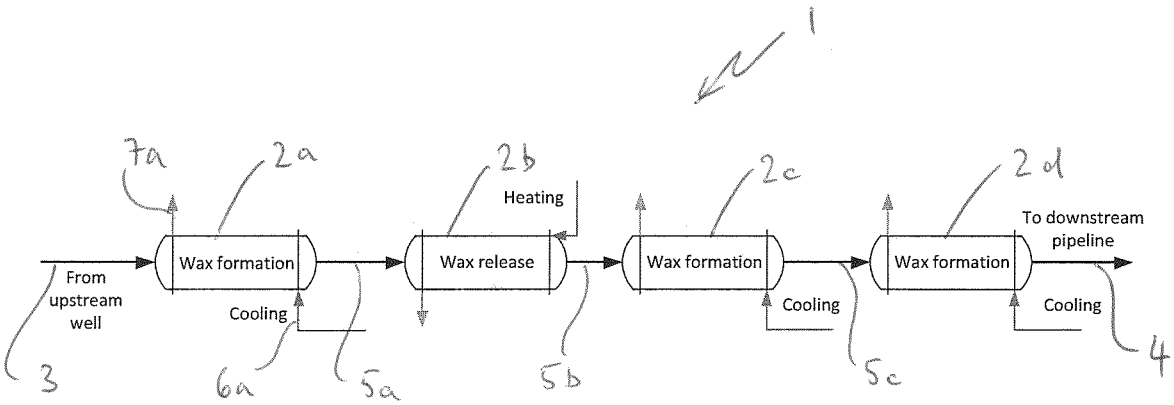
1
7a
2a
2b
Heating
2c
2d
To downstream pipeline
Wax formation
Wax release
Wax formation
Wax formation
From upstream well
Cooling
Cooling
Cooling
3
6a
5a
5b
5c
4

Fig. 1

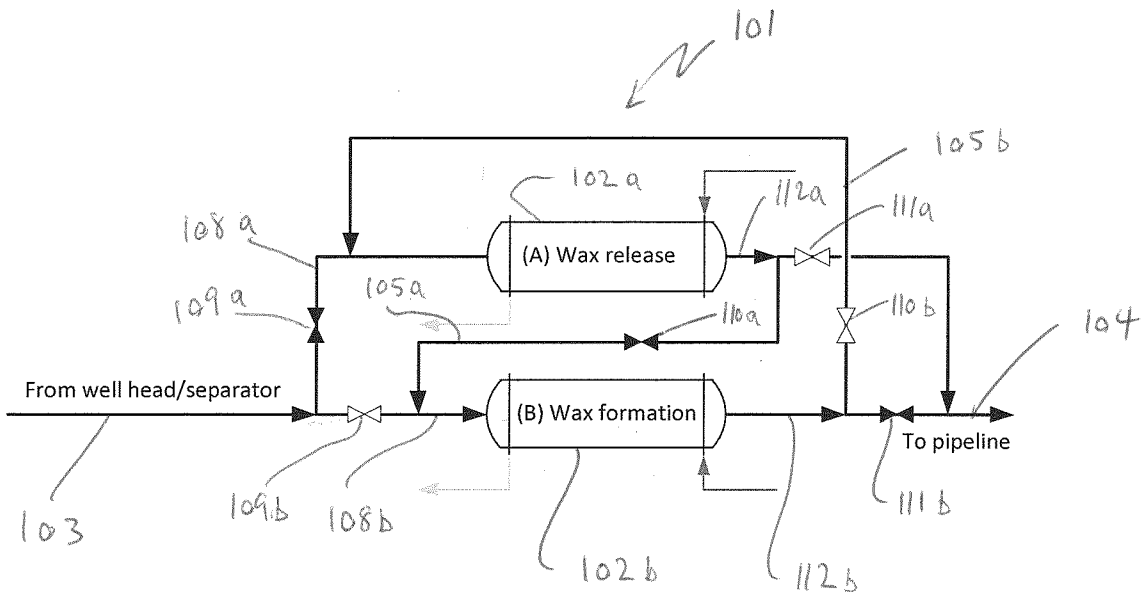
101
105b
102a
112a
111a
108a
(A) Wax release
109a
105a
110a
110b
104
From well head/separator
(B) Wax formation
To pipeline
103
109b
108b
102b
112b
111b

Fig. 2

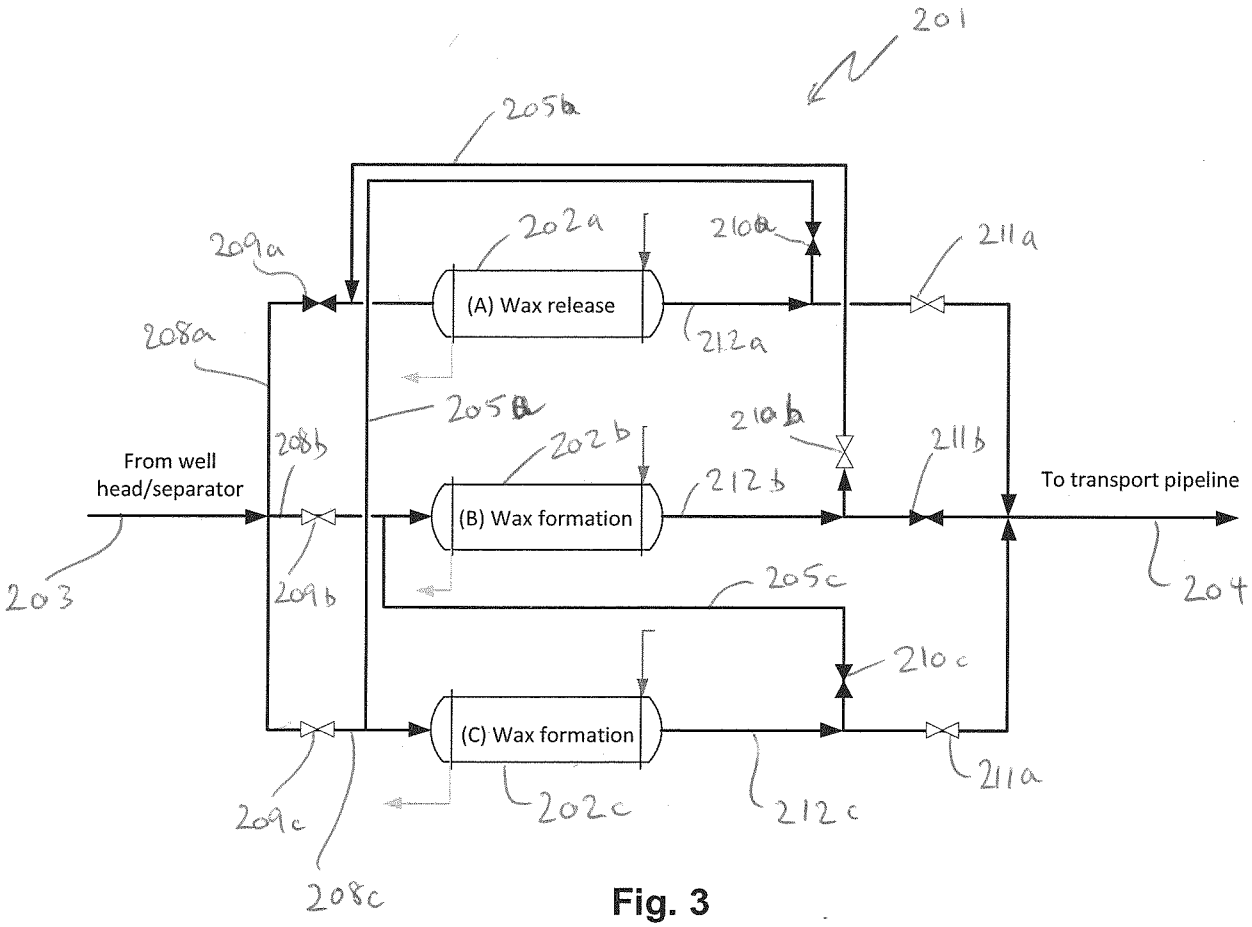
201
205a
209a
202a
210a
211a
208a
(A) Wax release
212a
205b
210b
208b
202b
211b
From well head/separator
(B) Wax formation
212b
To transport pipeline
203
209b
205c
204
210c
(C) Wax formation
211a
209c
202c
212c
208c

Fig. 3

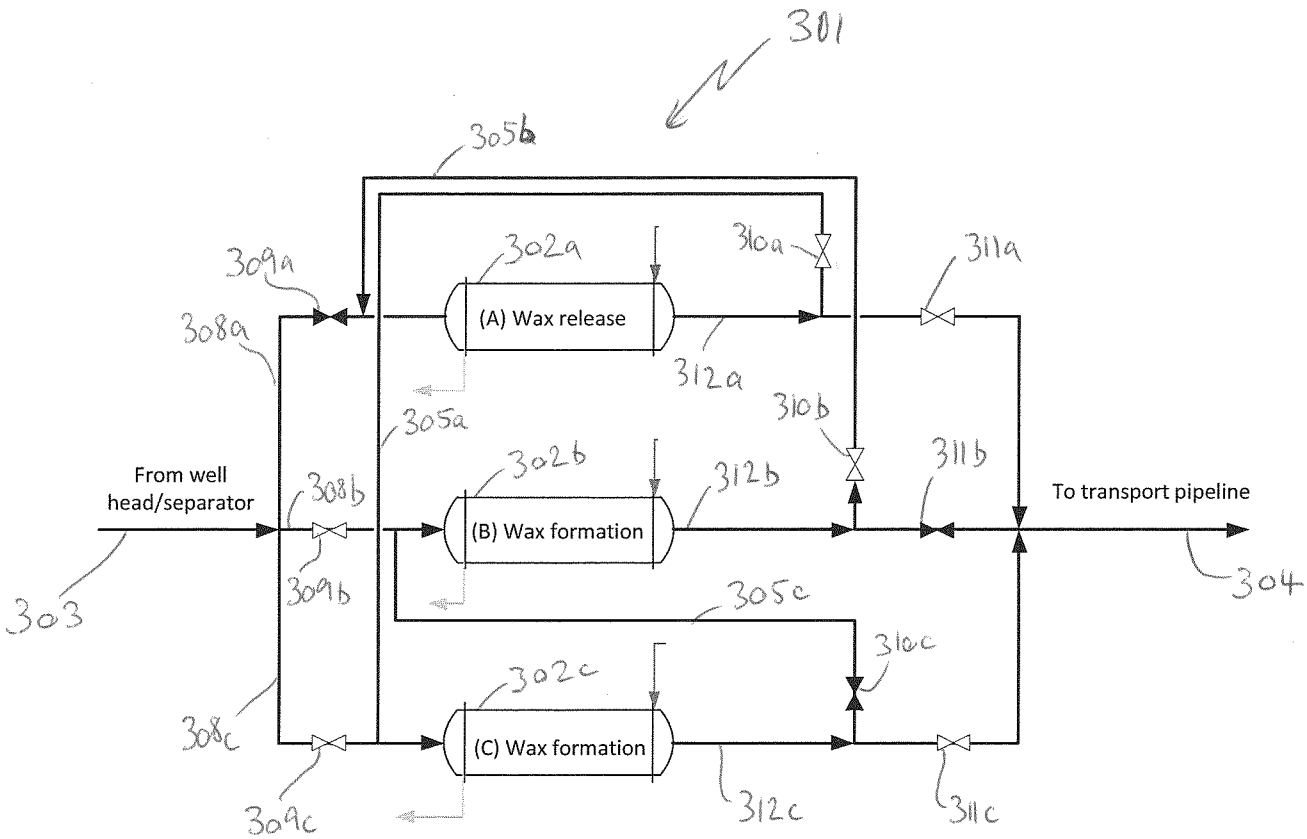
301
305b
309a
302a
310a
311a
308a
(A) Wax release
312a
305a
310b
From well
head/separator
308b
302b
312b
311b
To transport pipeline
303
309b
(B) Wax formation
304
305c
310c
302c
308c
(C) Wax formation
309c
312c
311c

Fig. 4

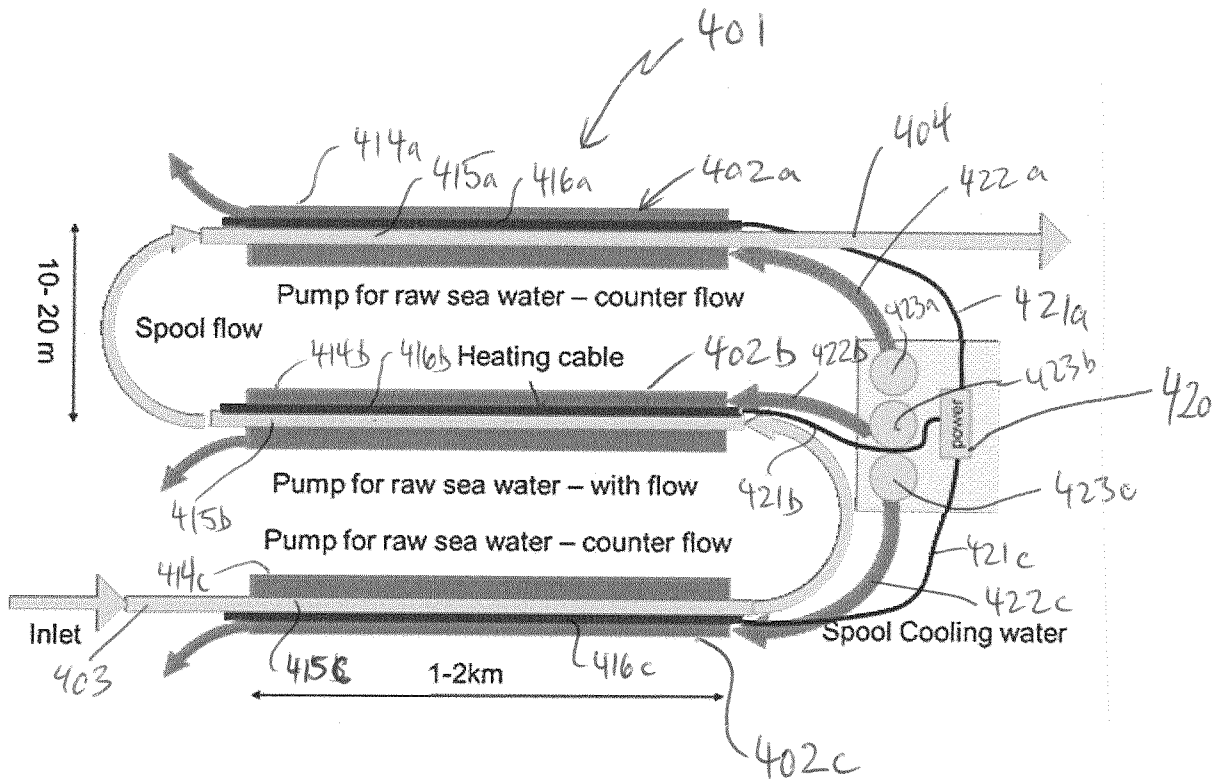
401
414a
415a
416a
402a
404
422a
10- 20 m
Spool flow
Pump for raw sea water – counter flow
423a
421a
414b
416b
Heating cable
402b
422b
423b
420
Pump for raw sea water – with flow
421b
423c
415b
Pump for raw sea water – counter flow
421c
414c
422c
Inlet
Spool Cooling water
403
415c
1-2km
416c
402c

FIG. 5

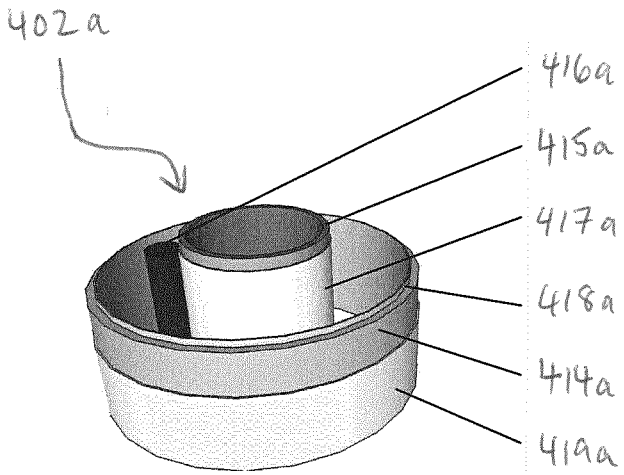
402a
416a
415a
417a
418a
414a
419a

FIG. 6

INTERNATIONAL SEARCH REPORT

International application No
PCT/EP2012/068170

A. CLASSIFICATION OF SUBJECT MATTER
INV. E21B21/06 F28F19/00 F28G13/00 F28D7/16 F28D7/10
ADD.

According to International Patent Classification (IPC) or to both national classification and IPC

B. FIELDS SEARCHED

Minimum documentation searched (classification system followed by classification symbols)
F28F F28G E21B B08B C02F C10G F03G

Documentation searched other than minimum documentation to the extent that such documents are included in the fields searched

Electronic data base consulted during the international search (name of data base and, where practicable, search terms used)
EPO-Internal

C. DOCUMENTS CONSIDERED TO BE RELEVANT

Category*	Citation of document, with indication, where appropriate, of the relevant passages	Relevant to claim No.
A	WO 2009/051495 A1 (STATOILHYDRO ASA [NO]; HOFFMAN RAINER [NO]; AMUNDSEN LENE [NO]) 23 April 2009 (2009-04-23) cited in the application page 5, line 20 - page 6, line 12; claim 1; figures 1-6	1,2,8,9, 21-31
A	US 3 454 464 A (TUGGLE RAY ET AL) 8 July 1969 (1969-07-08) the whole document	1,30
A	US 2 303 823 A (COBERLY CLARENCE J) 1 December 1942 (1942-12-01) the whole document	1,30
A	US 4 577 677 A (EZZELL ROBERT C [GB]) 25 March 1986 (1986-03-25) the whole document	1-31

-/--

[X] Further documents are listed in the continuation of Box C.

[X] See patent family annex.

* Special categories of cited documents :

"A" document defining the general state of the art which is not considered to be of particular relevance

"E" earlier application or patent but published on or after the international filing date

"L" document which may throw doubts on priority claim(s) or which is cited to establish the publication date of another citation or other special reason (as specified)

"O" document referring to an oral disclosure, use, exhibition or other means

"P" document published prior to the international filing date but later than the priority date claimed

"T" later document published after the international filing date or priority date and not in conflict with the application but cited to understand the principle or theory underlying the invention

"X" document of particular relevance; the claimed invention cannot be considered novel or cannot be considered to involve an inventive step when the document is taken alone

"Y" document of particular relevance; the claimed invention cannot be considered to involve an inventive step when the document is combined with one or more other such documents, such combination being obvious to a person skilled in the art

"&" document member of the same patent family

Date of the actual completion of the international search	Date of mailing of the international search report
15 May 2013	29/05/2013

Name and mailing address of the ISA/	Authorized officer
European Patent Office, P.B. 5818 Patentlaan 2 NL - 2280 HV Rijswijk Tel. (+31-70) 340-2040, Fax: (+31-70) 340-3016	Leclaire, Thomas

1

Form PCT/ISA/210 (second sheet) (April 2005)

INTERNATIONAL SEARCH REPORT

International application No
PCT/EP2012/068170

C(Continuation). DOCUMENTS CONSIDERED TO BE RELEVANT

Category*	Citation of document, with indication, where appropriate, of the relevant passages	Relevant to claim No.
A	DE 33 28 311 A1 (SCHMIDT JOHANN DIPL ING) 14 February 1985 (1985-02-14) the whole document	1-25
A	US 3 213 834 A (JOHN HEATHCOTE ET AL) 26 October 1965 (1965-10-26) the whole document	1-8,14, 15, 21-23,25
A	US 4 143 702 A (BARR JR JAMES W) 13 March 1979 (1979-03-13) the whole document	1-8,14, 15, 21-23,25
A	JP H02 136573 A (JAPAN METALS & CHEM CO LTD) 25 May 1990 (1990-05-25) abstract; figures 1-3	1,30

1

INTERNATIONAL SEARCH REPORT

Information on patent family members

International application No
PCT/EP2012/068170

Patent document cited in search report	Publication date	Patent family member(s)	Publication date
WO 2009051495 A1	23-04-2009	CA 2703407 A1	23-04-2009
		CN 101896688 A	24-11-2010
		EA 201070493 A1	29-10-2010
		EA 201200956 A1	28-12-2012
		GB 2468220 A	01-09-2010
		GB 2490394 A	31-10-2012
		US 2010300486 A1	02-12-2010
		WO 2009051495 A1	23-04-2009
US 3454464 A	08-07-1969	NONE	
US 2303823 A	01-12-1942	NONE	
US 4577677 A	25-03-1986	GB 2169393 A	09-07-1986
		US 4577677 A	25-03-1986
DE 3328311 A1	14-02-1985	NONE	
US 3213834 A	26-10-1965	NONE	
US 4143702 A	13-03-1979	CA 1055479 A1	29-05-1979
		CH 606963 A5	30-11-1978
		DE 2638468 A1	03-03-1977
		FR 2322349 A1	25-03-1977
		GB 1536897 A	29-12-1978
		JP S5228753 A	03-03-1977
		JP S6037400 B2	26-08-1985
		NL 7609412 A	01-03-1977
		SE 7609433 A	28-02-1977
		US 4143702 A	13-03-1979
		ZA 7605053 A	31-08-1977
JP H02136573 A	25-05-1990	JP 2726684 B2	11-03-1998
		JP H02136573 A	25-05-1990