(19) Europäisches Patentamt
European Patent Office
Office européen des brevets

(11) EP 0 520 802 B1

(12) EUROPEAN PATENT SPECIFICATION

(45) Date of publication and mention of the grant of the patent:
22.05.1996 Bulletin 1996/21

(51) Int Cl.6: **G03G 15/00**

(21) Application number: **92305876.2**

(22) Date of filing: **25.06.1992**

(54) Process cartridge and image forming apparatus usable with this process cartridge

Arbeitseinheit und Bilderzeugungsgerät mit einer solchen Einheit

Unité de traitement et appareil de formation d'images utilisant une telle unité

(84) Designated Contracting States:
DE FR GB IT

(30) Priority: **28.06.1991 JP 183933/91**
28.02.1992 JP 79243/92
04.06.1992 JP 144484/92

(43) Date of publication of application:
30.12.1992 Bulletin 1992/53

(73) Proprietor: **CANON KABUSHIKI KAISHA**
Tokyo (JP)

(72) Inventors:
- **Goto, Shinji, c/o Canon Kabushiki Kaisha**
  Ohta-ku, Tokyo (JP)
- **Saito, Jun, c/o Canon Kabushiki Kaisha**
  Ohta-ku, Tokyo (JP)
- **Ishi, Hiroyuki, c/o Canon Kabushiki Kaisha**
  Ohta-ku, Tokyo (JP)
- **Ando, Masao, c/o Canon Kabushiki Kaisha**
  Ohta-ku, Tokyo (JP)
- **Watanabe, Yoshiaki,**
  c/o Canon Kabushiki Kaisha
  Ohta-ku, Tokyo (JP)
- **Isoda, Yuzo, c/o Canon Kabushiki Kaisha**
  Ohta-ku, Tokyo (JP)

(74) Representative:
Beresford, Keith Denis Lewis et al
BERESFORD & Co.
2-5 Warwick Court
High Holborn
London WC1R 5DJ (GB)

(56) References cited:

EP-A- 0 276 910	EP-A- 0 285 139
EP-A- 0 397 465	EP-A- 0 405 514
EP-A- 0 407 183	DE-A- 3 236 854
JP-A- 3 252 665	JP-A- 3 252 667
JP-A- 3 252 669	JP-A- 3 352 668
JP-A- 4 070 767	JP-A- 4 090 561
US-A- 4 873 548	US-A- 4 912 563

- **PATENT ABSTRACTS OF JAPAN vol. 15, no. 287 (P-1229)22 July 1991 & JP-A-03 098 061**
- **PATENT ABSTRACTS OF JAPAN vol. 12, no. 34 (P-662)(2881) 2 February 1988 & JP-A-62 186 274**
- **PATENT ABSTRACTS OF JAPAN vol. 13, no. 550 (P-972)8 December 1989 & JP-A-01 229 270**

Note: Within nine months from the publication of the mention of the grant of the European patent, any person may give notice to the European Patent Office of opposition to the European patent granted. Notice of opposition shall be filed in a written reasoned statement. It shall not be deemed to have been filed until the opposition fee has been paid. (Art. 99(1) European Patent Convention).

EP 0 520 802 B1

Printed by Jouve, 75001 PARIS (FR)

Description

This invention relates to electrophotographic process cartridges for use with an electrophotographic image forming apparatus (such as copying machines, laser beam printers and facsimile receivers), to electrophotographic image forming apparatus for use with such a cartridge, and to a combination of such a cartridge and apparatus.

Process cartridges are well known and typically contain a rotatable photosensitive drum on which a latent image can be formed, a supply of toner and a developing device for developing the image so that it can be transferred to a recording medium, a cleaning device for cleaning unused toner from the drum, and a charging device for charging the drum ready for formation of another latent image. When the supply of toner runs out, or if a part of the cartridge fails to function properly, the cartridge can be exchanged for a fresh cartridge. Thus, process cartridges have considerably improved the ease of maintenance of electrophotographic printers and the like.

Conventional printers and the like are of the so-called "clam-shell" type, and examples are shown in patent applications EP-A-0407183 and EP-A-0405514. A clam-shell printer is formed in two substantial parts which are hinged together, and each of which contains operating parts of the printer. When a cartridge is in need of replacement, the two parts are hinged open, the cartridge is removed and a fresh cartridge is located in one of the parts, and the two parts are then hinged closed to place the printer in an operative condition with the cartridge in its operative position inside the printer. A problem with clam-shell printers is that, because the upper part contains operational parts of the printer, it is heavy, and consequently heavy-duty hinges need to be employed, together with counter-balancing springs, and this adds to the cost.

The invention avoids these problems by providing a novel process cartridge and novel image forming apparatus, whose features are respectively defined in claims 1 and 18. As will be seen from a consideration of these claims and of the following description with reference to the drawings, the cartridge and apparatus of the invention are provided with interacting guiding and supporting arrangements such that, when the cartridge is pushed into a cavity in the apparatus, it is firstly guided towards its operative position within the apparatus and is thereafter supported for a rotational movement, under the action of spring-biased pressing means in the apparatus, to bring rearwardly directed latching portions on the cartridge into engagement with abutments provided in the apparatus. In this way, the operative position of the cartridge in the apparatus is precisely defined and the cartridge is held in that position during operation of the apparatus.

Specific embodiments of the invention will now be described by way of example with reference to the drawings in which:-

Figure 1 is a sectional view of an image forming apparatus in accordance with a preferred embodiment of the present invention.

Figures 2 to 7 are explanatory views of the operation for loading or unloading the process cartridge into or out of the image forming apparatus.

Figure 8 is an explanatory view of the guide member and its related members of a preferred embodiment of image forming apparatus in accordance with the present invention.

Figures 9 to 13 are explanatory views of the operation for loading or unloading the process cartridge into or out of the image forming apparatus.

Figure 14 is a sectional side view of an image forming apparatus in accordance with a preferred embodiment of the present invention.

Figure 15 is a perspective view of a process cartridge in accordance with a preferred embodiment of the present invention.

Figure 16 is a side view of the process cartridge shown in Figure 15.

Figure 17 is a side view of a pressing member.

Figure 18 is a side view of the guide member on the side of the apparatus main assembly.

Figure 19 is a perspective view of the loading/unloading mechanism of an image forming apparatus in accordance with a preferred embodiment of the present invention.

Figure 20 is a plan view showing the engagement relation between the positioning rail member and the protrusive section, in accordance with an preferred embodiment of the present invention.

Figures 21A to 21D are explanatory views showing the operation for loading or unloading the process cartridge into or out of the image forming apparatus.

Figure 22 is a perspective view showing the engagement relation between the thrust rail member and the thrust guide member in accordance with a preferred embodiment of the present invention.

Figure 23 is a side view of the loading/unloading mechanism in accordance with a preferred embodiment of the present invention.

To begin with, first preferred embodiment in accordance with the present invention is explained, referring to Figure 1 to Figure 7.

Figure 1 shows a sectional side view of an image forming apparatus. In the figure, 1 is a process cartridge in which process devices for image forming, such as a photosensitive drum, developing device, cleaning device, and charging device, are provided as an integrated unit, and which can be freely loaded into or unloaded out of an apparatus main assembly 100. This process cartridge 1 is positioned in the proper loading location by being guided and pressed by a guide member 10, pressing member 20, and the like, which are provided in the apparatus main assembly 100. Incidentally, the process cartridge 1 in the state shown in Figure 1 is yet

to be loaded into the apparatus main assembly 100. Further, the location of the photosensitive drum 1a contained in the process cartridge 1 in its proper loading location is outlined in the middle section of the apparatus main assembly 100 by the two-dot chain line. There are provided on the feeding side of the above mentioned photosensitive drum 1a feed cassette 2, feed roller 3, resist roller 4, transfer guide 5, and transfer roller 6. Further, there are provided on the paper delivery side fixing device 7, guide 7a, conveying roller 8a, delivery roller 8b, delivery tray 9, and the like. The electrostatic latent image is formed on the photosensitive drum 1a by the image forming beam irradiated corresponding to the image signal from the host apparatus, and is developed by the developing device, appearing as a toner image. This toner image moves to the transfer roller 6 as the photosensitive drum 1a rotates, and is transferred onto transfer paper P by this transfer roller 6. At this time, the transfer paper P in feed cassette 2 is sent out piece by piece in the rotational direction (arrow mark direction) of the feed roller 3, is delivered to the resist roller 4, and then, is fed between the photosensitive drum 1a and the transfer roller 6 after its timing is adjusted by this resist roller 4. Then, the toner image on the photosensitive drum 1a is transferred onto the transfer paper P and the transfer paper P is sent to the fixing device 7 after the completion of transfer process. After the toner image is fixed as a permanent image by this fixing device 7, the paper is delivered by the delivery roller 8 to delivery tray 9 where it accumulates. Incidentally, 47, 48 and 49 in the figure are paper guides.

Next, the mechanism for loading or unloading the process cartridge 1 into or out of the apparatus main assembly 100 is explained.

The loading/unloading mechanism is provided below the main assembly cover 101 which can be freely opened or closed around hinge 101a in the vertical direction. This loading/unloading mechanism comprises guide members 10 which are diagonally arranged, pressing members 20, stopper members 22, and the like, which are provided on the upper end side of this guide members 10. This loading/unloading mechanism allows the process cartridge 1 in the state of being pressed onto the guide member 10 by the pressing member 20 to be loaded or unloaded along this guide member 10. These guide members 10 and pressing members 20 are provided on both side surfaces of the apparatus main assembly 100, one on each side surface, and support the process cartridge 1, thereby properly positioning both of its side sections. However, only one side is explained below for brevity. The other side has the same configuration.

Further, at the upper right of the guide member 10 in Figure 1, a bridge member 102 which bridges between both side walls of the apparatus main assembly 10, and a diagonal exterior plate 103 which extends from this bridge member 102, are diagonally arranged in parallel to the guide members 10, and constitute the section for guiding the process cartridge 1 into the loading/unloading mechanism.

Further, the guide member 10 is formed of resin, and its upper, middle, lower, and under sections, except the upper section which is the loading opening of the process cartridge 1, are formed to protrude perpendicularly toward this side of the page of the figure. On the upper side section, a cam section 11 for opening the drum shutter of the process cartridge 1 is provided, and on the upper surface of the protrusion in the middle section, first guide surface 12 is provided, which positions by pressure this process cartridge 1 in the loading/unloading direction of the process cartridge 1. Further, since a downward step is provided on the middle section of the protrusion, it results in that step section 12a is also formed on the first guide surface 12.

Also one the upper surface of the protrusion of the lower side section of the guide member 10, second guide surface 13, which is similar to the above, is provided in parallel to the first guide surface 12, for positioning the process cartridge 1 by pressure, and at its lower end section, drum shaft bearing section 14 which is circularly concaved downward is provided. Further, a support surface 15 for unloading the process cartridge 1 is provided on the under side and the inner surface of the protrusion, on the upper side of the drum shaft bearing section 14. In addition, guide holder section 16 for supporting and positioning the molded resin transfer guide 5 is provided below the drum shaft bearing section 14, and precise positioning of the transfer guide 5 relative to the photosensitive drum 1a, exchanging of the transfer guide 5, and such, can be easily performed by the presence of this guide holder section 16.

Further, the pressing member 20 is provided above the cam section 11 in line with this guide member 10, and its tip section, pressing section 20a, is pressed downward by a guide pressing spring 21. Also, stopper member 22 for positioning the process cartridge 1 is provided at the lower end side of the guide member 10.

In the figure, the process cartridge 1 is outlined by the chain line, and on both of its side surfaces, first protrusive section 30, which is thin and long, and which moves following the first guide surface 12 of the above mentioned guide member 10, is provided. In addition, second protrusive section 31 (which is a protruding extension of the drum shaft of the photosensitive drum 1a) which moves following the second guide surface 13 of the guide member 10 is provided below this first protrusive section 31. Further, on the upper surface of the process cartridge 1, a positioning groove 32, which engages with stopper member 22, is provided, and on the upstream side of this positioning groove 32 in the loading direction of the process cartridge 1, a pressure bearing surface 33 which moves while bearing the pressure from the pressing section 20a of the pressing member 20 is provided.

Additionally, a drum shutter for protecting the photosensitive drum 1a is provided on the process cartridge

1, and the linking mechanism section of this drum shutter, which is interlocked with the loading or unloading operation of the process cartridge 1, is engaged with or discharged from the cam section 11 of the guide member 10, thereby opening or closing the drum shutter. Further, a driven gear for rotating the internal members is provided on the process cartridge, coaxially with the second protrusive section 31 which is the drum shaft, and when this process cartridge 1 is properly positioned in its loading location within the apparatus main assembly 100, this driven gear and the driving gear on the apparatus main assembly 100 side mesh with each other.

Next, the operation for loading this process cartridge 1 into the apparatus main assembly 100 and for unloading it from the apparatus main assembly 100 are explained, referring to Figure 1 to Figure 7.

First, the main assembly cover 101 is opened as is shown in Figure 1. Then, the end section of the first protrusive section 30 of the process cartridge 1 is placed on the first guide surface 12 of the guide member 10, and the bottom section of the process cartridge 1 is placed on the guide section which comprises the bridging member 102 and the diagonal exterior plate 103. Next, as this process cartridge 1 is pushed inward of the apparatus main assembly 100, with the first protrusive section 30 of the process cartridge 1 being slid along the first guide surface 12, as is shown in Figure 2, the pressure bearing surface 33 of the process cartridge 1 is pressed by the pressing section 20a of pressing member 20, whereby this process cartridge 1 is pressed at the first protrusive section 30 onto the first guide surface 12 of the guide member 10 and is moved inward of the apparatus main assembly 100, with its attitude being held steady.

Further, in this case, the second protrusive section 31 is located slightly above the second guide surface 13 of the guide member 10, and the process cartridge 1 is virtually supported by the first protrusive section 30 on the first guide surface 12.

As the process cartridge 1 is further pushed inward, as is shown in Figure 3, the cam section 11 of the guide member 10 engages with the linking mechanism of the drum shutter of the process cartridge 1, whereby the drum shutter opens, as well as the first protrusive section 30 moves beyond the step section 12a of the first guide surface 12. Then, as the major portion of the first protrusive section 30 moves beyond the step section 12a of the first guide surface 12, the process cartridge 1 is slightly rotated counterclockwise in the figure by the pressure from the pressing member 20, and at this time, begins to be supported by the second protrusive section 31 on the second guide surface 13.

As the process cartridge 1 is further pushed inward, the process cartridge 1 is further rotated slightly in the counterclockwise direction, as is shown in Figure 4, and its upper section and the stopper member 22 come in contact with each other. Then, as the operator lets go of the process cartridge 1, the second protrusive section 31 of the process cartridge 1 is dropped into the drum shaft bearing section 14 of the guide member 10, and finally, the positioning groove 32 of the process cartridge 1 engages with the stopper member 22, whereby the process cartridge 1 is properly positioned in its loading location within the apparatus main assembly 100, while it remains under the pressure from the pressing member 20 (refer to Figure 5). Also, in this case, the contact between the first protrusion section 30 and the first guide surface 12, and the contact between the second protrusive section 31 and the second guide surface 13 are completely broken.

Also in this case, the pressure from the pressing member 20 imparted on this process cartridge 1 is eased as the process cartridge 1 drops in. Therefore, the operator can sense a clicking feel, thereby recognizing easily that this process cartridge 1 is properly positioned at its loading location. Further, when the process cartridge 1 drops in, the driven gear of this process cartridge and the driving gear on the apparatus main assembly 100 side smoothly engage with each other.

Next, the case in which the process cartridge 1 is unloaded from the apparatus main assembly 100 is explained.

When this process cartridge 1 is to be taken out of the apparatus main assembly 100, the operator slightly rotates the exposed upper section of the process cartridge 1 in the counterclockwise direction as is shown in Figure 6, making the lower end section of the first protrusive section 30 come in contact with the support surface 15 of the guide member 10, and then, rotates the process cartridge 1 further in the counterclockwise direction, with this point of contact as the center of rotation, as is shown in Figure 7. By this operation, the second protrusive section 31 of the process cartridge 1 is moved upward (3 to 6 mm) from the drum shaft bearing section 14, and simultaneously, the driven gear of the process cartridge 1 and the driving gear of the apparatus main assembly 100 are made to disengage from each other. Then, if this process cartridge 1 is pulled out in the direction following the first guide surface 12 and the second guide surface 13 of the guide member 10, this process cartridge 1 can be easily taken out of the apparatus main assembly 100. Further, in this case, the linking mechanism of the drum shutter is disengaged from the cam section 11 of the guide member 10, whereby the drum shutter is closed by the function of the spring member or the like.

Now then, when the process cartridge 1 is in the proper loading location within the apparatus main assembly 100, the driven gear of the process cartridge 1 receives a driving force with an approximately horizontal pressure angle, from the driving gear of the apparatus main assembly 100. Therefore, the engagement between two gears can be smoothly broken, as was described above, at the point where the second projection 31 of the process cartridge 1 has risen slightly above the drum shaft bearing section 14.

As was described above, when the process cartridge 1 is loaded, the process cartridge 1 can be inserted into the apparatus main assembly 100, with its attitude being held steady, just by pressing the first protrusive section 30 and the like of the process cartridge 1 onto the first guide surface 12 and the like formed on the side walls of the guide member 10. Therefore, the loading operation of the process cartridge 1 becomes easy, which increases the operational efficiency for loading or unloading this process cartridge 1. Also, when the process cartridge 1 is loaded, it must be inserted into the apparatus main assembly 1 against the pressure from the pressing member 20, but since the direction of the pressure imparted on this process cartridge 1 and the direction of the process cartridge 1 insertion are approximately perpendicular to each other, the pressure does not amount to be too much of a resistance.

Further, when the process cartridge 1 is to be positioned at its loading location within the apparatus main assembly 100, the process cartridge 1 displaces slightly downward, which reduces the pressure from the pressing member 20. Therefore, the operation generates a clicking feel, which helps the operator easily recognize that the process cartridge 1 has been accurately positioned at its loading location. Also, when the operator lifts up the process cartridge 1 in order to take it out, since the rotational fulcrum can be established at the contact point, which is further inward of the drum shaft bearing section 14, between the lower end section of the protrusive section 30 and the support surface 15 of the guide member 10, and the point of lift can be established sufficiently outward from the pressure bearing point in the inserting direction, the force for lifting the process cartridge 1 may be small.

Moreover, according to this preferred embodiment, the locus of the process cartridge 1 during loading or unloading comprises the diagonal first locus along the first and the second guide surfaces 12 and 13 of the guide member 10, and the vertical second locus resulting from the movement of the second protrusive section 31 which drops into or is lifted from the drum shaft bearing section 14. Therefore, the engagement between the driven gear of the process cartridge 1 and the driving gear on the apparatus main assembly 100 side is naturally made by the pressure from the pressing member 20, regardless of the manner of inserting the process cartridge 1, easing the fear of damaging the gear surfaces when the process cartridge 1 is loaded.

Further, when the process cartridge 1 is loaded or unloaded, it is not necessary to interlock the functions of the guide member 10 or the pressing member 20 with the opening or closing movement of the main assembly cover 101. Therefore, not only may the structures of the main assembly cover 101 and its hinge sections be simple, but also, it is unnecessary for protrusive sections and the like to be provided on the under side of the main assembly cover 100.

Next, the second preferred embodiment in accordance with the present invention is explained, referring to Figure 8 to Figure 13. Incidentally, components with the same functions as those in the first embodiment are assigned the same reference codes in order to make use of their previous explanations.

In this preferred embodiment, the middle protrusive section (first guide surface 12) of the guide member 10 of the loading/unloading mechanism is eliminated, so that the process cartridge 1 is pressed onto this guide member 10 only at the second guide surface 13 (downward step 13a is formed in the middle). Also, a support section 17 for lifting the process cartridge 1 is provided at the lower end of the guide member 10. Also, on both side surfaces of the process cartridge 1, third protrusive section 34 of a small diameter is provided in addition to the second protrusive section 31 which is the extension of the drum shaft. This third protrusive section 34 is provided on the upstream side of the second protrusive section 31 in the direction of inserting the process cartridge 1.

Since the operation for loading or unloading the process cartridge 1 into or out of the apparatus main assembly 100 is approximately the same as that of the first embodiment, only essential points are explained. The process cartridge 1 is pushed in by the operator, as is shown in Figure 8, while its second protrusive section 31 and third protrusive section 34 are pressed onto the second guide surface 13 of the guide member 10 by the pressing member 20. After the second protrusive section 31 moves beyond the step section 13a of the second guide surface 13 and the process cartridge 1 is slightly rotated in the counterclockwise direction in Figure 9, as is show in Figure 9, the process cartridge 1 is further pushed in. Then, as is shown in Figure 10, the protrusive section 34 also moves beyond the step section 13a of the second guide surface 13, and finally, the upper surface of the process cartridge 1 comes in contact with the stopper member 22. As the operator lets go of the cartridge in this state, the second protrusive section 31 is dropped into the drum shaft bearing section 14 of the guide member 10, as is shown in Figure 11, and the positioning groove 32 of the process cartridge 1 engages with the stopper member 22, whereby the process cartridge 1 is properly positioned in its loading location within the apparatus main assembly 100 while it remains under the pressure from the pressing member 22.

When the process cartridge 1 is to be removed from the apparatus main assembly 100, the exposed upper section of the process cartridge 1 is rotated slightly upward by the operator, as is shown in Figure 12, whereby the lower section of the process cartridge 1 comes in contact with the support section 17 of the guide member 10. Then, the process cartridge 1 is further rotated in a manner so as to be lifted to the point shown in Figure 13, using this support section 17 as the fulcrum, whereby this process cartridge 1 can be easily pulled out, di-

agonally upward, along the guide member 10.

As was stated above, it also becomes possible in this embodiment to load or unload the process cartridge 1, with the same effectiveness as the first preferred embodiment. Further, since, specifically in this case, the size and the number of protrusive sections of the process cartridge 1 and the guide member 10 are made so as to be as small as possible, the hindrance by the protrusive sections can be suppressed to a minimum when the process cartridge 1 is loaded or unloaded, whereby the loading/unloading operation becomes substantially easier. Also in this case, since the first protrusive section 30, such as that in the first embodiment, does not need to be provided on the process cartridge 1, the area where the linking mechanism for opening or closing the drum shutter is provided can be made wider on the process cartridge 1, which affords increased freedom in designing the process cartridge 1.

Next, the third preferred embodiment in accordance with the present invention is explained, referring to Figure 14. Incidentally, components with the same functions as those in the first and the second embodiments are assigned the same reference codes in order to make use of their previous explanations.

Now then, in this preferred embodiment, the process cartridge 1 is properly positioned in its loading location within the apparatus main assembly 100 just by being inserted in the diagonal direction along the guide member 10 of the loading/unloading mechanism, and its dropping movement explained in the first preferred embodiment is not needed.

In other words, the process cartridge 1 is inserted into the apparatus main assembly 100 following the second guide surface 13 (this is not the step section 13a explained in the second preferred embodiment) while its second protrusive section 31 and protrusive section 34 (as is evident from the figure, these are connected by reinforcement member 35) are pressed onto the second guide surface 13 of the guide member 10 by the pressing member 20. Then, as the second protrusive section 31 comes close to the drum shaft bearing section 14 of the guide member 10, the pressing member 20 moves over and beyond bend section 33a of the upper pressure bearing surface 33 and presses the downward surface 33b, which declines rightward. Finally, the second protrusive section 31 of the process cartridge 1 is positioned in the drum shaft bearing section 14, whereby the process cartridge 1 is properly positioned in its loading location within the apparatus main assembly 100, while remaining under pressure.

At this point, as the pressing member 20 moves over and beyond the bend section 33a of the upper pressure bearing section 33 of the process cartridge 1 and presses the downward surface 33b, the pressure imparted on the process cartridge 1 by the pressing member 20 changes its pressing direction, thereby functioning to force this process cartridge 1 inward of the apparatus main assembly 100. Therefore, not only the operation for inserting the process cartridge 1 becomes easier but also the operator can sense, through a clicking feel obtained at this time, that the positioning of the process cartridge 1 in its loading location within the apparatus main assembly 100 is about to be completed.

Now then, in the event a positioning method of inserting the process cartridge 1 in a straight line is used, there is a fear that the teeth of the driven gear of the process cartridge 1 and those of the driving gear of the apparatus main assembly 100 side will crash into each other and the gear tooth surfaces may be damaged, but according to this preferred embodiment, since the pressure from the pressing member 20 works as a resistance for halving the thrust of inserting the process cartridge 1 into the apparatus main assembly 100, gear tooth surface damage can be prevented. Incidentally, when the process cartridge 1 is in its proper loading location, the driving gear and the driven gear are positioned in such a manner that the driving force is transferred in the direction approximately perpendicular to the inserting direction of process cartridge 1.

As was described above, the same effectiveness can be also accomplished in this preferred embodiment as the first preferred embodiment. Further, in this preferred embodiment, since the process cartridge 1 need only be moved in a straight line specifically when the process cartridge 1 is to be loaded, and the guide surface of the guide member 10 comprises only the guide surface 13, in other words, because its structure is simple, the operation for loading or unloading the process cartridge 1 becomes far easier, which affords additional operational efficiency in loading and unloading.

In the above first to third preferred embodiments, the protrusive sections 30, 31 and 34 are provided on both side of the process cartridge 1, and these are pressed onto the guide surfaces 12 and 13 of the guide member 10, but certain sections of the external surface of the process cartridge 1 may be used to be pressed onto the guide surfaces. Also, it is needless to say that the loading/unloading direction of the process cartridge 1 may be the same as that of the drum shaft of the photosensitive drum 1a. Further, the pressing member 22 may comprise components which directly press the protrusive sections 30, 31 and 34 of the process cartridge 1, which is needless to say.

Next, the fourth preferred embodiment in accordance with the present invention is explained, referring to Figure 15 to Figure 18. Incidentally, Figure 15 is a perspective view of the process cartridge and the pressing members on the apparatus main assembly side, in the preferred embodiment in accordance with the present invention; Figure 16 is a left side view of the process cartridge shown in Figure 15; Figure 17 is a side view of the pressing member; and Figure 18 is a side view of the guide member on the apparatus main assembly side.

In this preferred embodiment, a rib 36 is provided on the right side surface of the process cartridge 1, in

addition to the protrusive sections in the above mentioned first preferred embodiment. This rib 36 is provided upward of the above mentioned first protrusive section 30, approximately parallel to this. Further, the shape of the guide rib 38 provided on the left side surface is made different from the shape of the protrusive section 30 provided on the right side surface, and the shape of the guide rib 38 is made to be wider than the shape of the first protrusive section 30. Now then, according to this preferred embodiment, the locus of the process cartridge 1 is substantially more regulated by the above mentioned rib 36 when it is inserted into the apparatus main assembly. Moreover, the process cartridge 1 is regulated by this rib 36 so as not to rotate in the counterclockwise direction when the cam 35 on the process cartridge 1 side comes in contact with the cam surface 11 of the guide member 10 on the apparatus main assembly side for opening or closing the drum shutter while the process cartridge 1 is being inserted. The cam 35 rotates in the counterclockwise direction (arrow direction in Figure 15) by coming in contact with the cam surface 11, and opens the drum shutter 37 supported by the arm 37a (Figure 16). On the other hand, the guide rib 38 regulates the process cartridge 1 so as not to be rotated in the counterclockwise direction by the rib 41 provided on the guide member 10 on the apparatus main assembly. With the above arrangement, according to this preferred embodiment, the locus of the process cartridge 1 is rigidly regulated while the process cartridge 1 is loaded into or unloaded from the apparatus main assembly, whereby the opening or closing of the drum shutter 37 is made reliable. Also, even if the opening of the main assembly cover 101 is small, or the process cartridge 1 is rotated a large angle while it is being pulled out, the process cartridge 1 can be smoothly unloaded.

As has been stated above, in this preferred embodiment, the cartridge frame structures 1b are provided on both sides, in the axial direction of the photosensitive drum 1a, of the process cartridge 1, and the first protrusive section 30, which protrudes outward from the frame structure 1b, is provided on one of the cartridge frame structure 1b, and the guide rib 38, which protrudes outward from the frame structure 1b, is provided on the other of the cartridge frame structure 1b. In addition, the rib 36, which also protrudes outward, is provided upward of the above mentioned first protrusive section 30. The above mentioned first protrusive section 30 and the guide rib 38 are provided in a manner so as to extend approximately from the cleaning means 53 location to the developing device location, and is long and narrow. The rib 36 is provided in a manner so as to extend approximately from the location of the above mentioned photosensitive drum 1a to the above mentioned cleaning means 53 location, and is also long and narrow. The above mentioned rib 36 is arranged to be approximately parallel to the above mentioned first protrusive section 30, and the above mentioned rib 36 is located towards the developing device compared to the above mentioned first protrusive section 30. On one side of the frame structure 1b on which these first protrusive section 30 and rib 36 are provided, the cam 35 is provided, which comes in contact with the cam section 11 formed on the apparatus main assembly 100 side and opens the drum shutter 37 which covers the transfer region of the photosensitive drum 1a when the process cartridge 1 is loaded into the apparatus main assembly 100.

Next, examples of the dimensions of the above mentioned first protrusive section 30, rib 36, and guide rib 38 are presented.

First, the first protrusive section 30 is approximately 5 mm in width (l_1) and 50 mm in length (l_2). The rib 36 is approximately 2 mm in width (l_3) and 35 mm in length (l_4). The guide rib 38 is approximately 8.5 mm at the widest point (l_5) and 5 mm at the narrowest point (l_6), and 50 mm in length (l_7). As for the height of protrusions from the frame structure 1b, it is approximately 5 mm for the first protrusive section 30, 3 mm for the rib 36, and 8 mm for the guide rib 8.

Next, the pressing member 20 of this preferred embodiment is explained, referring to Figure 17.

In this preferred embodiment, a roller 20b is provided on the pressing member 20 provided on the apparatus main assembly side, at its sliding contact point with the process cartridge 1. This roller 20b can rotate around the shaft 20c. According to this preferred embodiment, the sliding resistance between the pressing member 20 and the process cartridge 1 becomes much smaller, improving the operational efficiency in loading or unloading the process cartridge 1.

Also, the side surface 20d of the pressing member 20 may be used to regulate the side surface of the rib 39 which protrudes from the upper surface of the process cartridge 1, at its side edge, so that the process cartridge 1 is impelled to the right relative to the inserting direction of the process cartridge 1 when the process cartridge 1 is inserted, whereby the process cartridge 1 is properly positioned in its width direction during its insertion. Also, if the pressure bearing section 33 of the process cartridge 1 is formed as a rib instead of a surface, its contact surface with the pressing member 20 becomes smaller, and therefore, the sliding resistance becomes smaller, in addition to the above improvement.

Incidentally, 50 is an exposure opening, 51 a photosensitive drum, 52 a developing means (52a is a developing sleeve), and 53 is a cleaning means.

Next, the fifth preferred embodiment of the present invention is explained, referring to Figure 19 and Figure 20. Figure 19 is a perspective view showing the state of engagement between the process cartridge 120 and the positioning rail member 125, and

Figure 20 is a plan view showing the loading process of the process cartridge 120.

On the upper wall section of the process cartridge 120, a protrusive section (second engaging member) 120c is formed in the sliding direction of the process car-

tridge 120, and a positioning rail member (second engaged member) 125 is provided on the apparatus main assembly side, which has a U-shaped sectional profile in order to be engaged with this protrusive section 120c. This positioning rail member 125 is supported so as to rotate freely, and is also pressed by a pressuring means (not illustrated) which presses the process cartridge 120 downward. As is shown in Figure 20 the positioning of the process cartridge 120 in its thrust direction is regulated by the engagement between the process cartridge 120 and the positioning rail member 125 during its sliding movement, but this engagement is not present at the time when the loading is completed. Further, the protrusions formed on both side wall sections of the process cartridge 120 are placed on the rail sections of the apparatus main assembly side, thereby sliding this process cartridge 120. Such a configuration is the same as that in the above mentioned preferred embodiments.

On the positioning rail member 125, an entry section 125a, a positioning section 125b, and the end section 125c are formed in this order, and the width L11 of the positioning section 125b is set up to be slightly wider than the width L12 of the protrusive section 120c. Both the width L13 of the entry section 125a and the width L14 of the end section 125c are set up to be wider than the width L12.

With the above arrangement, the positioning of the process cartridge 120 in the thrust direction is carried out based on the engagement between the protrusive section 120c and the positioning rail member 125.

Such positioning is carried out as the protrusive section 120c slides following the tapered surface of the entry section 125a of the rail member 125 due to the self weight of the process cartridge 120. When this sliding ends, the positioning of the process cartridge 120 in the thrust direction is completed.

Moreover, at the final stage when the loading of the process cartridge 120 is completed, the positioning rail member 125 and the elongated protrusive section 120c are not in the engaged state, and a force in the thrust direction such as is constantly imparted on the process cartridge 120 in the case of the prior technology is not present, whereby it is not necessary to increase the rigidity of the process cartridge 120 more than usual. Further, since such simultaneous bidirectional pressure as that in the case of the prior technology is not imparted on the process cartridge 120, the vertical positioning by the positioning rail member 125 can be accurately carried out.

Next, the sixth preferred embodiment in accordance with the present invention is explained, referring to Figure 21 and Figure 22.

Figure 21 shows the structure of the copying apparatus, and the steps for loading the process cartridge 112 into the apparatus main assembly 1, and Figure 22 is a perspective view showing the state of engagement between the thrust guide section (second engaging member) 112b and the thrust rail member (second engaged member) 126. In this preferred embodiment, the sliding passage of the process cartridge 112 is not linear, and the rail section (first engaged member) 130a is bent as is shown in the figure.

When the projection (first engaging member) 112a of the process cartridge 112 to be loaded into the apparatus main assembly 100 is placed on the rail section 130a on the apparatus main assembly 1 side (Figure 21 (a)), this process cartridge 112 slides following the rail section 130a. Then, during its sliding process, the thrust guide section 112b which protrudes from the protrusive section 112a (shown in detail in Figure 22) engages with the thrust rail member 126, whereby the positioning of the process cartridge 112 in the thrust direction is carried out (Figure21 (b)). As the process cartridge 112 linearly slides further, the positioning member 22 is fitted in the concave section 112c formed on the upper wall section of the process cartridge 112 (Figure 21(c)). At this time, the engagement between the thrust guide section 112b and the thrust rail member 126 has been broken, and the positioning member 20 is pressed upon the upper wall section of the process cartridge 112. Therefore, the process cartridge 112 rotates clockwise around is contact point with the positioning member 22, coming into the state shown in Figure 21(d). The rotative shaft 114a, which comes sliding following the rail section formed below the rail section 130a, is finally fitted in the bearing section 130b, whereby the position of this rotative shaft 114a is also regulated.

The above mentioned thrust rail member 126 is provided with the entry section 126a which forms the tapered surface, and the positioning section 126b which regulates the position of the process cartridge 112 in the thrust direction, and the width L21 of the positioning section 126b and the width L22 of the thrust guide section 112b have a relation for fitting properly to each other (Figure 22).

With the above arrangement, the positioning of the process cartridge 112 in the thrust direction is carried out based on the engagement between the thrust guide section 112b and the thrust rail member 126.

At the final stage, when the loading of the process cartridge 112 is completed, the thrust rail member 126 and the thrust guide section 112b are not in the engaged state, and a force in the thrust direction is not imparted on the process cartridge. Therefore, it is not necessary to increase the rigidity of the process cartridge 112 more than usual, and also, the positioning by the positioning member 20 is accurately carried out.

Next, the seventh preferred embodiment in accordance with the present invention is explained, referring to Figure 23.

In the figure, the positioning member (second engaged member) 126 is supported by the apparatus main assembly, so that it can freely rotate around the rotative shaft 126a, and the thrust rail section 126b is formed at one end of this positioning member 126. This thrust rail section 126b engages with the thrust guide section 112b

provided on the process cartridge 112 which comes sliding into the apparatus main assembly 100, thereby regulating the position of the process cartridge 112 in the thrust direction. Also, on the other end of the positioning member 126, the positioning section 126c which fits into the concave section 112c formed on the upper wall section of the process cartridge 112 is provided. As the process cartridge 112 slides along, the positioning member 126 rotates in the counterclockwise direction, whereby the engagement between the thrust rail section 126b and the thrust guide section 112b is broken.

With the above arrangement, the positioning of the process cartridge 112 in the thrust direction is carried out based on the engagement between the thrust guide section 112b and the thrust rail section 126b.

Moreover, at the final stage when the loading of the process cartridge 112 is completed, the thrust rail section 126b and the thrust guide section 112b are not in the engaged state, and the force in the thrust direction is not imparted on the process cartridge. Therefore, it is not necessary to increase the rigidity of the process cartridge 112 more than usual, and also, the positioning by the positioning section 115 is accurately carried out.

Incidentally, the so-called process cartridge in each of the above mentioned preferred embodiments is a cartridge which is realized by integrating a charging device, developing device, cleaning device, and photosensitive drum into a single unit which can be loaded into or unloaded from the main assembly of an image forming apparatus (for example, developing apparatus, laser beam printer, and the like); a cartridge which is realized by integrating at least one of the charging device, developing device, and cleaning device, and the photosensitive drum into a single unit which can be loaded into and unloaded from the main assembly of the image forming apparatus (for example, copying apparatus, laser beam printer, and the like); or a cartridge which is realized by integrating at least the developing device and the photosensitive drum into a single unit which can be loaded into or unloaded from the apparatus main assembly (for example, copying apparatus, laser beam printer, and the like).

As was described above, according to the above mentioned fifth to seventh preferred embodiments, since a sliding passage regulating means regulates the positioning of the process cartridge in the perpendicular direction to its sliding direction, the above mentioned process cartridge is loaded in its proper location within the main assembly of the image forming apparatus. Therefore, a satisfactory image is formed by these image forming apparatus.

Further, the self weight of the process cartridge is used in order for the sliding passage regulating means to regulate the positioning of the process cartridge in the direction perpendicular to its sliding direction during the process in which this process cartridge slides within the main assembly of the image forming apparatus, and at the time when this sliding movement ends, the above mentioned positioning regulation is completed.

In addition, the positioning in the sliding direction of the above mentioned process cartridge and the positioning in the direction regulated by the above mentioned sliding passage regulating means are regulated by the loaded state of this process cartridge. Therefore, in order to carry out the three-dimensional positioning of this process cartridge in the loaded state and obtain the optimum process cartridge positioning result, only one remaining positioning direction has to be taken care of. Because of this reason, the positioning in this remaining direction can be accurately carried out.

As was explained above, according to the present invention, only a simple operation is needed to load reliably the process cartridge into the main assembly of image forming apparatus, without losing the proper attitude of the process cartridge.

Claims

1. An electrophotographic process cartridge (1) for use with an electrophotographic image forming apparatus (100) having a cavity to removably receive the cartridge in an operative position; the cartridge comprising: a casing having a front and a rear and containing a rotatable photosensitive drum (1a; 51; 114) mounted towards the front of the casing and extending transversely of the casing, a driven gear coaxial with the drum, and charging, developing and cleaning means (52, 53) cooperating with the drum; the casing having a first opening (50) for passing light to the drum for forming a latent image thereon, and a second opening for transferring developed images from the drum to transfer material; the cartridge being adapted to be removably inserted into the cavity of the apparatus in a general insertion direction extending from the rear to the front of the casing and transverse to the axis of the drum; a rear portion of the casing being constructed so that it may be gripped by an operator for inserting the cartridge into and removing it from the apparatus; the cartridge having a pair of supports (31; 114a) at opposite ends of the drum for engaging a corresponding pair of supports (14; 130b) of the apparatus when the cartridge is in the operative position to support the cartridge in that position but permit the cartridge to pivot about the supports of the apparatus; the casing having a first guide projection (30; 34; 36; 38; 112a) at one side of the casing and spaced forwardly from the rear of the casing for engaging the apparatus to guide the cartridge during insertion into the apparatus but to permit the pivoting of the cartridge when in the operative position; the casing having a pair of rearwardly directed latching portions (32) at the top of the casing and towards the front of the casing and spaced apart transversely of the casing for engaging a corre-

sponding pair of abutments (22) of the apparatus when the cartridge is in the operative position to limit pivoting of the cartridge about the supports of the apparatus; and the top of the casing having a pair of ramped portions (33) adjacent opposite sides of the casing and rearwardly of the latching portions for engaging spring-loaded pressing means (20) of the apparatus as the cartridge is inserted into the cavity so that, when the cartridge is in the operative position with the supports of the cartridge on the supports of the apparatus, forces applied to the ramped portions produce a moment about the supports to urge the rearwardly directed latching portions of the cartridge against the abutments of the apparatus so as to define the operative position of the cartridge and hold the cartridge in the operative position.

2. A cartridge as claimed in claim 1, wherein the first guide projection (30,112a) is above one of the supports (31,114a) of the cartridge.

3. A cartridge as claimed in claim 1 or 2, wherein the first guide projection is elongate in the general insertion direction.

4. A cartridge as claimed in claim 3, wherein the first guide projection (30) has a length (l_2) of about 50mm and a width (l_1) of about 5mm.

5. A cartridge as claimed in any preceding claim, wherein the first guide projection (30) projects by about 5mm from a surface of the casing.

6. A cartridge as claimed in any preceding claim, wherein the casing has a second guide projection (38) at the opposite side thereof to the side having the first guide projection (30), the second guide projection being above a respective one of the supports (31).

7. A cartridge as claimed in claim 6, wherein the second guide projection is elongate in the general insertion direction.

8. A cartridge as claimed in claim 7, wherein the second guide projection has a length (l_7) of about 50m and a width (l_6, l_5) of about 5 to 8.5mm.

9. A cartridge as claimed in any of claims 6 to 8, wherein the second guide projection projects by about 8mm from a surface of the casing.

10. A cartridge as claimed in any preceding claim, wherein the casing has a third guide projection (36) on the same side thereof as the side having the first guide projection (30), the third guide projection being above and rearward of the first guide projection.

11. A cartridge as claimed in claim 10, wherein the third guide projection is elongate in the general insertion direction.

12. A cartridge as claimed in claim 11, wherein the third guide projection has a length (l_4) of about 35mm and a width (l_3) of about 2mm.

13. A cartridge as claimed in any of claims 10 to 12, wherein the third guide projection projects by about 3mm from a surface of the casing.

14. A cartridge as claimed in any preceding claim, further comprising a drum shutter (37) moveable between a closed position in which the drum shutter closes the second opening to protect the drum and an open position in which the drum is accessible through the second opening, and a mechanism (35, 37a) for moving the shutter between the closed and open positions, the mechanism including an actuator (35) member arranged to be engaged by the apparatus as the cartridge is inserted into the apparatus.

15. A cartridge as claimed in claim 14 when dependent on any of claims 10 to 13, wherein the actuator is disposed adjacent the third guide projection.

16. A cartridge as claimed in any preceding claim, wherein the latching portions (32) are formed by notches in a top surface of the casing.

17. A cartridge as claimed in any preceding claim, wherein the casing has a front portion containing the drum, charging means and cleaning means, and a rear portion containing the developing means, the front and rear casing portions being connected to each other for rocking movement about an axis extending transversely of the cartridge, and the latching portions (32) and ramped portions (33) being provided on the front portion.

18. An electrophotographic image forming apparatus (100) for use with a cartridge (1) as claimed in any preceding claim, the apparatus having a cavity to removably receive the cartridge in an operative position; a drive gear for engaging and driving the driven gear of the drum when the cartridge is in the operative position; means for passing light through the first opening (50) of the cartridge when in the operative position to form a latent image on the drum; means for transporting transfer material past the second opening of the cartridge when in the operative position; a pair of supports (14; 130b) at opposite sides of the cavity for engaging the supports (31; 114a) of the cartridge to support the car-

tridge in the operative position but permit the cartridge to pivot about the supports of the apparatus; a guide surface (12; 13) at one side of the cavity for engaging the first guide projection of the cartridge to guide the cartridge during insertion into the apparatus but to permit the pivoting of the cartridge when in the operative position; a pair of abutments (22) for engaging the latching portions (32) of the cartridge when in the operative position to limit pivoting of the cartridge about the supports of the apparatus; and spring-loaded pressing means (20) for engaging adjacent opposite sides of the cavity the pair of ramped portions (33) of the cartridge as the cartridge is inserted into the cavity so that, when the cartridge is in the operative position with the supports of the cartridge on the supports (14,130b) of the apparatus, forces applied to the ramped portions produce a moment about the supports to urge the rearwardly directed latching portions of the cartridge against the abutments (22) of the apparatus so as to define the operative position of the cartridge and hold the cartridge in the operative position.

19. An apparatus as claimed in claim 18, wherein the pressing means comprises a pair of spring-loaded levers (20) each for engaging a respective one of the ramped portions.

20. An apparatus as claimed in claim 18 or 19, in the form of a copying machine, laser beam printer or facsimile receiver.

21. A combination of an apparatus as claimed in any of claims 1 to 17 and an apparatus as claimed in any of claims 18 to 20 for use with each other.

Patentansprüche

1. Eine elektrofotographische Verarbeitungs-Kartusche (1) zum Gebrauch bei einer elektrofotographischen Bilderzeugungsvorrichtung (100), die einen Hohlraum aufweist, um die Kartusche in einer Betriebsposition entfernbar aufzunehmen, wobei die Kartusche umfaßt: ein Gehäuse mit einer vorderen und mit einer hinteren Seite und welches eine drehbare lichtempfindliche Trommel (la; 51; 114) enthält, die in Richtung der vorderen Seite des Gehäuses montiert ist und die sich quer durch das Gehäuse erstreckt, sowie ein angetriebenes Zahnrad, welches koaxial zur Trommel liegt, sowie Ladungs-, Entwicklungs- und Reinigungsmittel (52, 53), die mit der Trommel zusammenwirken; das Gehäuse weist eine erste Öffnung (50) auf, um Licht zu der Trommel durchzulassen, um darauf ein latentes Bild auszubilden, sowie eine zweite Öffnung, um entwickelte Bilder von der Trommel auf Übertragungsmaterial zu übertragen; die Kartusche ist ausgelegt, um entfernbar in den Hohlraum der Vorrichtung eingesetzt zu werden, und zwar in einer allgemeinen Einsatzrichtung, die sich von der hinteren Seite zu der vorderen Seite des Gehäuses erstreckt und quer zu der Achse der Trommel; ein hinterer Abschnitt des Gehäuses ist so aufgebaut, daß er von einer Bedienperson genommen werden kann, um die Kartusche in die Vorrichtung einzusetzen und diese aus der Vorrichtung zu entfernen; die Kartusche weist ein Paar von Trägern (31; 114a) an entgegengesetzten Enden der Trommel auf, um mit einem entsprechenden Paar von Abstützungen (14; 130b) der Vorrichtung in Eingriff zu kommen, wenn sich die Kartusche in der Betriebsposition befindet, um die Kartusche in dieser Position zu stützen, wobei jedoch ermöglicht ist, daß sich die Kartusche um die Abstützungen der Vorrichtung herum drehen kann; das Gehäuse weist einen ersten Führungsvorsprung (30; 34; 36; 38; 112a) an einer Seite des Gehäuses auf, der von der Rückseite des Gehäuses nach vorne beabstandet ist, um mit der Vorrichtung in Eingriff zu kommen, um die Kartusche während des Einsetzens in die Vorrichtung zu führen, und um jedoch die Drehung der Kartusche in der Betriebsposition zu erlauben; das Gehäuse weist ein Paar von nach hinten gerichteten Klinkabschnitten (32) oben am Gehäuse und in Richtung zur Vorderseite des Gehäuses auf, die quer zum Gehäuse beabstandet sind, um mit einem entsprechenden Paar von Anlageabschnitten (22) der Vorrichtung in Eingriff zu kommen, wenn sich die Kartusche in der Betriebsposition befindet, um eine Drehung der Kartusche um die Abstützungen der Vorrichtung zu begrenzen; und das Obere des Gehäuses weist ein Paar von schiefen Abschnitten (33) auf, die gegenüberliegenden Seiten des Gehäuses und rückwärts den Klinkabschnitten benachbart sind, um mit federbelasteten Druckmitteln (20) der Vorrichtung in Eingriff zu kommen, wenn die Kartusche in den Hohlraum eingesetzt wird, so daß, wenn sich die Kartusche in der Betriebsposition befindet, wobei die Träger der Kartusche auf den Abstützungen der Vorrichtung aufliegen, Kräfte, die auf die schiefen Abschnitte aufgebracht werden, ein Moment um die Abstützungen erzeugen, um die nach rückwärts gerichteten Klinkabschnitte der Kartusche gegen die Anlageabschnitte der Vorrichtung zu drücken, um so die Betriebsposition der Kartusche festzulegen und um die Kartusche in der Betriebsposition zu halten.

2. Kartusche nach Anspruch 1, wobei der erste Führungsvorsprung (30, 112a) oberhalb eines der Träger (31, 114a) der Kartusche angeordnet ist.

3. Kartusche nach Anspruch 1 oder 2, wobei der erste Führungsvorsprung in Richtung der allgemeinen Einsatzrichtung länglich ausgebildet ist.

4. Kartusche nach Anspruch 3, wobei der erste Führungsvorsprung (30) eine Länge (1_2) von etwa 50 mm und eine Breite (l_l) von etwa 5 mm aufweist.

5. Kartusche nach einem der vorhergehenden Ansprüche, wobei der erste Führungsvorsprung (30) um etwa 5 mm über eine Oberfläche des Gehäuses vorsteht.

6. Kartusche nach einem der vorhergehenden Ansprüche, wobei das Gehäuse einen zweiten Führungsvorsprung (38) aufweist, und zwar an der gegenüberliegenden Seite davon, nämlich zur Seite, die den ersten Führungsvorsprung (30) aufweist, wobei sich der zweite Führungsvorsprung oberhalb eines entsprechenden Trägers (31) befindet.

7. Kartusche nach Anspruch 6, wobei der zweite Führungsvorsprung in Richtung der allgemeinen Einsatzrichtung länglich ausgebildet ist.

8. Kartusche nach Anspruch 7, wobei der zweite Führungsvorsprung eine Länge (l_7) von etwa 50 mm und eine Breite (l_6,l_5) von etwa 5 bis 8,5 mm aufweist.

9. Kartusche nach einem der vorhergehenden Ansprüche 6 bis 8, wobei der zweite Führungsvorsprung um etwa 8 mm über eine Oberfläche des Gehäuses vorsteht.

10. Kartusche nach einem der vorhergehenden Ansprüche, wobei das Gehäuse einen dritten Führungsvorsprung (36) auf der gleichen Seite davon aufweist, auf der der erste Führungsvorsprung (30) liegt, wobei sich der dritte Führungsvorsprung oberhalb und rückwärts des ersten Führungsvorsprungs befindet.

11. Kartusche nach Anspruch 10, wobei der dritte Führungsvorsprung in Richtung der allgemeinen Einsatzrichtung länglich ausgebildet ist.

12. Kartusche nach Anspruch 11, wobei der dritte Führungsvorsprung eine Länge (l_4) von etwa 35 mm und eine Breite (l_3) von etwa 2 mm aufweist.

13. Kartusche nach einem der vorhergehenden Ansprüche 10 bis 12, wobei der dritte Führungsvorsprung um etwa 3 mm über eine Oberfläche des Gehäuses vorsteht.

14. Kartusche nach einem der vorhergehenden Ansprüche, weiterhin mit einem Verschluß (37) für die Trommel, der zwischen einer geschlossenen Position, in der der Verschluß für die Trommel die zweite Öffnung verschließt, um die Trommel zu schützen und einer offenen Position verschiebbar ist, in der die Trommel durch die zweite Öffnung erreichbar ist, sowie mit einem Mechanismus (35, 37a) zur Bewegung des Verschlußes zwischen der geschlossenen und der offenen Position, wobei der Mechanismus ein Stellglied (35) umfaßt, welches angeordnet ist, um mit der Vorrichtung in Eingriff zu kommen, wenn die Kartusche in die Vorrichtung eingesetzt wird.

15. Kartusche nach Anspruch 14, wenn abhängig von einem der Ansprüche 10 bis 13, wobei das Stellglied benachbart dem dritten Führungsvorsprung angeordnet ist.

16. Kartusche nach einem der vorhergehenden Ansprüche, wobei die Klinkabschnitte (32) durch Kerben in einer oberen Oberfläche des Gehäuses ausgebildet sind.

17. Kartusche nach einem der vorhergehenden Ansprüche, wobei das Gehäuse einen vorderen Abschnitt aufweist, der die Trommel, die Lademittel und die Reinigungsmittel enthält, sowie einen hinteren Abschnitt, der die Entwicklungseinrichtung enthält, wobei der vordere Abschnitt und der hintere Abschnitt miteinander verbunden ist, um eine Kippbewegung um eine Achse auszuführen, die sich quer zur Kartusche erstreckt, sowie die Klinkabschnitte (32) und die schiefen Abschnitte (33) an dem vorderen Abschnitt vorgesehen sind.

18. Elektrofotographische Bilderzeugungsvorrichtung (100) zum Gebrauch mit einer Kartusche (1) nach einem der vorhergehenden Ansprüche, wobei die Vorrichtung aufweist: einen Hohlraum, um die Kartusche in einer Betriebsposition entfernbar aufzunehmen; ein Antriebs-Zahnrad zum Eingreifen und Antreiben des angetriebenen Zahnrads der Trommel, wenn sich die Kartusche in der Betriebsposition befindet; Mittel zur Führung von Licht durch die erste Öffnung (50) der Kartusche, wenn sich diese in der Betriebsposition befindet, um auf der Trommel ein latentes Bild auszubilden; Mittel zum Transport von Übertragungsmaterial über die zweite Öffnung der Kartusche, wenn sich diese in der Betriebsposition befindet; ein Paar von Abstützungen (14; 130b) auf gegenüberliegenden Seiten des Hohlraums, um mit den Trägern (31; 114a) der Kartusche in Eingriff zu gelangen, um die Kartusche in der Betriebsposition zu stützen, um jedoch zu ermöglichen, daß sich die Kartusche um die Abstützungen der Vorrichtung dreht; eine Führungsfläche (12; 13) auf einer Seite des Hohlraums, um mit dem ersten Führungsvorsprung der Kartusche in Eingriff zu kommen, um die Kartusche während des Einsetzens in die Vorrichtung zu führen, um jedoch zu erlauben, daß sich die Kartusche in der Betriebspo-

sition dreht; einem Paar von Anlageabschnitten (22), um mit den Klinkabschnitten (32) der Kartusche in Eingriff zu gelangen, wenn sich diese in der Betriebsposition befindet, um die Drehung der Kartusche um die Abstützungen der Vorrichtung herum zu begrenzen; sowie federbelastete Druckmittel (20), um benachbarte gegenüberliegende Seiten des Hohlraums mit dem Paar von schiefen Abschnitten (33) der Kartusche in Eingriff zu bringen, wenn die Kartusche in den Hohlraum eingesetzt wird, so daß, wenn sich die Kartusche in der Betriebsposition befindet, wobei die Träger der Kartusche auf den Abstützungen (14, 130b) der Vorrichtung liegen, Kräfte, die auf die schiefen Abschnitte aufgebracht werden, ein Moment um die Abstützungen herum erzeugen, um die nach rückwärts gerichteten Klinkabschnitte der Kartusche gegen die Anlageabschnitte (22) der Vorrichtung zu drücken, um so die Betriebsposition der Kartusche festzulegen und um so die Kartusche in der Betriebsposition zu halten.

19. Vorrichtung nach Anspruch 18, wobei die Druckmittel ein Paar von federbelasteten Hebeln (20) umfassen, wobei jeder Hebel mit einem entsprechenden schiefen Abschnitt in Eingriff kommt.

20. Vorrichtung nach Anspruch 18 oder 19, in Gestalt eines Kopierers, Laserstrahldruckers oder eines Faxempfängers.

21. Kombination einer Vorrichtung nach einem der Ansprüche 1 bis 17 und einer Vorrichtung nach einem der Ansprüche 18 bis 20, zum gemeinsamen Einsatz.

Revendications

1. Cartouche de traitement électrophotographique (1) à utiliser avec un appareil électrophotographique (100) de formation d'images ayant une cavité pour recevoir de façon amovible la cartouche en position de fonctionnement ; la cartouche comportant : un boîtier ayant une partie avant et une partie arrière et contenant un tambour photosensible rotatif (1a ; 51 ; 114) monté vers la partie avant du boîtier et s'étendant transversalement au boîtier, une roue dentée menée coaxiale au tambour, et des moyens (52, 53) de chargement, de développement et de nettoyage coopérant avec le tambour ; le boîtier ayant une première ouverture (50) pour le passage de la lumière vers le tambour afin de former une image latente sur celui-ci, et une seconde ouverture pour reporter les images développées du tambour sur un support de report ; la cartouche étant conçue pour être insérée de façon amovible dans la cavité de l'appareil dans une direction d'insertion générale s'étendant de l'arrière vers l'avant du boîtier et transversale à l'axe du tambour ; une partie arrière du boîtier étant construite de façon à pouvoir être saisie par un opérateur pour l'insertion de la cartouche dans l'appareil et son enlèvement de l'appareil ; la cartouche ayant deux supports (31 ; 114a) à des extrémités opposées du tambour pour engager deux supports correspondants (14, 130b) de l'appareil lorsque la cartouche est dans la position de fonctionnement afin de supporter la cartouche dans cette position, mais de permettre à la cartouche de pivoter autour des supports de l'appareil ; le boîtier ayant une première saillie de guidage (30 ; 34 ; 36 ; 38 ; 112a) située sur un côté du boîtier et espacée vers l'avant de l'arrière du boîtier pour engager l'appareil afin de guider la cartouche pendant l'insertion dans l'appareil, mais de permettre le pivotement de la cartouche lorsqu'elle est dans la position de fonctionnement ; le boîtier comportant deux parties de verrouillage (32) dirigées vers l'arrière, sur le dessus du boîtier et vers l'avant du boîtier, et espacées transversalement du boîtier pour engager deux butées correspondantes (22) de l'appareil lorsque la cartouche est dans la position de fonctionnement afin de limiter le pivotement de la cartouche autour des supports de l'appareil ; et le dessus du boîtier ayant deux parties en rampe (33) adjacentes à des côtés opposés du boîtier situées en arrière des parties de verrouillage pour engager des moyens de pression (20), chargés par ressort, de l'appareil pendant que la cartouche est insérée dans la cavité afin que, lorsque la cartouche est dans la position de fonctionnement avec les supports de la cartouche situés sur les supports de l'appareil, des forces appliquées aux parties en rampe produisent un moment autour des supports pour solliciter les parties de verrouillage, dirigées vers l'arrière, de la cartouche contre les butées de l'appareil afin de définir la position de fonctionnement de la cartouche et de maintenir la cartouche dans la position de fonctionnement.

2. Cartouche selon la revendication 1, dans laquelle la première saillie de guidage (30, 112a) est au-dessus de l'un des supports (31, 114a) de la cartouche.

3. Cartouche selon la revendication 1 ou 2, dans laquelle la première saillie de guidage est allongée dans la direction d'insertion générale.

4. Cartouche selon la revendication 3, dans laquelle la première saillie de guidage (30) a une longueur (l_2) d'environ 50 mm et une largeur (l_1) d'environ 5 mm.

5. Cartouche selon l'une quelconque des revendications précédentes, dans laquelle la première saillie de guidage (30) fait saillie d'environ 5 mm d'une sur-

face du boîtier.

6. Cartouche selon l'une quelconque des revendications précédentes, dans laquelle le boîtier comporte une seconde saillie de guidage (38) à son côté opposé au côté ayant la première saillie de guidage (30), la seconde saillie de guidage étant au-dessus de l'un, respectif, des supports (31).

7. Cartouche selon la revendication 6, dans laquelle la seconde saillie de guidage est allongée dans la direction d'insertion générale.

8. Cartouche selon la revendication 7, dans laquelle la seconde saillie de guidage a une longueur (l_7) d'environ 50 mm et une largeur (l_6, l_5) d'environ 5 à 8,5 mm.

9. Cartouche selon l'une quelconque des revendications 6 à 8, dans laquelle la seconde saillie de guidage fait saillie d'environ 8 mm d'une surface du boîtier.

10. Cartouche selon l'une quelconque des revendications précédentes, dans laquelle le boîtier comporte une troisième saillie de guidage (36) sur le même côté que celui ayant la première saillie de guidage (30), la troisième saillie de guidage étant au-dessus et en arrière de la première saillie de guidage.

11. Cartouche selon la revendication 10, dans laquelle la troisième saillie de guidage est allongée dans la direction d'insertion générale.

12. Cartouche selon la revendication 11, dans laquelle la troisième saillie de guidage a une longueur (l_4) d'environ 35 mm et une largeur (l_3) d'environ 2 mm.

13. Cartouche selon l'une quelconque des revendications 10 à 12, dans laquelle la troisième saillie de guidage fait saillie d'environ 3 mm à une surface du boîtier.

14. Cartouche selon l'une quelconque des revendications précédentes, comportant en outre un obturateur (37) de tambour mobile entre une position fermée dans laquelle l'obturateur de tambour ferme la seconde ouverture pour protéger le tambour et une position ouverte dans laquelle le tambour est accessible à travers la seconde ouverture, et un mécanisme (35, 37a) pour déplacer l'obturateur entre les positions fermée et ouverte, le mécanisme comprenant un élément actionneur (35) disposé de façon à être engagé par l'appareil lorsque la cartouche est insérée dans l'appareil.

15. Cartouche selon la revendication 14 lorsqu'elle dépend de l'une quelconque des revendications 10 à 13, dans laquelle l'actionneur est disposé de façon à être adjacent à la troisième saillie de guidage.

16. Cartouche selon l'une quelconque des revendications précédentes, dans laquelle les parties de verrouillage (32) sont formées par des encoches dans une surface supérieure du boîtier.

17. Cartouche selon l'une quelconque des revendications précédentes, dans laquelle le boîtier comporte une partie avant contenant le tambour, des moyens de charge et des moyens de nettoyage, et une partie arrière contenant des moyens de développement, les parties avant et arrière du boîtier étant reliées entre elles pour basculer autour d'un axe s'étendant transversalement à la cartouche, et les parties de verrouillage (32) et les parties en rampe (33) étant situées sur la partie avant.

18. Appareil électrophotographique (100) de formation d'images à utiliser avec une cartouche (1) selon l'une quelconque des revendications précédentes, l'appareil ayant une cavité pour recevoir de façon amovible la cartouche en position de fonctionnement ; une roue dentée menante destinée à entrer en prise avec la roue dentée menée du tambour et l'entraîner lorsque la cartouche est dans la position de fonctionnement ; des moyens destinés à faire passer de la lumière à travers la première ouverture (50) de la cartouche lorsqu'elle est en position de fonctionnement pour former une image latente sur le tambour ; des moyens destinés à transporter un support de report au-delà de la seconde ouverture de la cartouche lorsqu'elle est dans la position de fonctionnement ; deux supports (14 130b) sur des côtés opposés de la cavité, destinés à engager les supports (31 ; 114a) de la cartouche afin de supporter la cartouche dans la position de fonctionnement, mais de permettre à la cartouche de pivoter autour des supports de l'appareil ; une surface de guidage (12 ; 13) sur un côté de la cavité, destinée à engager la première saillie de guidage de la cartouche pour guider la cartouche pendant l'insertion dans l'appareil, mais permettre le pivotement de la cartouche lorsqu'elle est dans la position de fonctionnement ; deux butées (22) destinées à engager les parties de verrouillage (32) de la cartouche lorsqu'elle est dans la position de fonctionnement pour limiter le pivotement de la cartouche autour des supports de l'appareil, et des moyens de pression (20) chargés par ressort destinés à engager, à proximité immédiate de côtés opposés de la cavité, les deux parties en rampe (33) de la cartouche lorsque la cartouche est insérée dans la cavité afin que, lorsque la cartouche est en position de fonctionnement avec les supports de la cartouche situés sur les supports (14, 130b) de

l'appareil, des forces appliquées aux parties en rampe produisent un moment autour des supports pour solliciter les parties de verrouillage, dirigées vers l'arrière de la cartouche contre les butées (22) de l'appareil afin de définir la position de fonctionnement de la cartouche et de maintenir la cartouche dans la position de fonctionnement.

19. Appareil selon la revendication 18, dans lequel les moyens de pression comprennent deux leviers (20) chargés par ressort destinés à porter chacun contre l'une, respective, des parties en rampe.

20. Appareil selon la revendication 18 ou 19, sous la forme d'une machine de copie, d'une imprimante à faisceau laser ou d'un récepteur de télécopie.

21. Combinaison d'un appareil selon l'une quelconque des revendications 1 à 17 et d'un appareil selon l'une quelconque des revendications 18 à 20 pour les utiliser l'un avec l'autre.

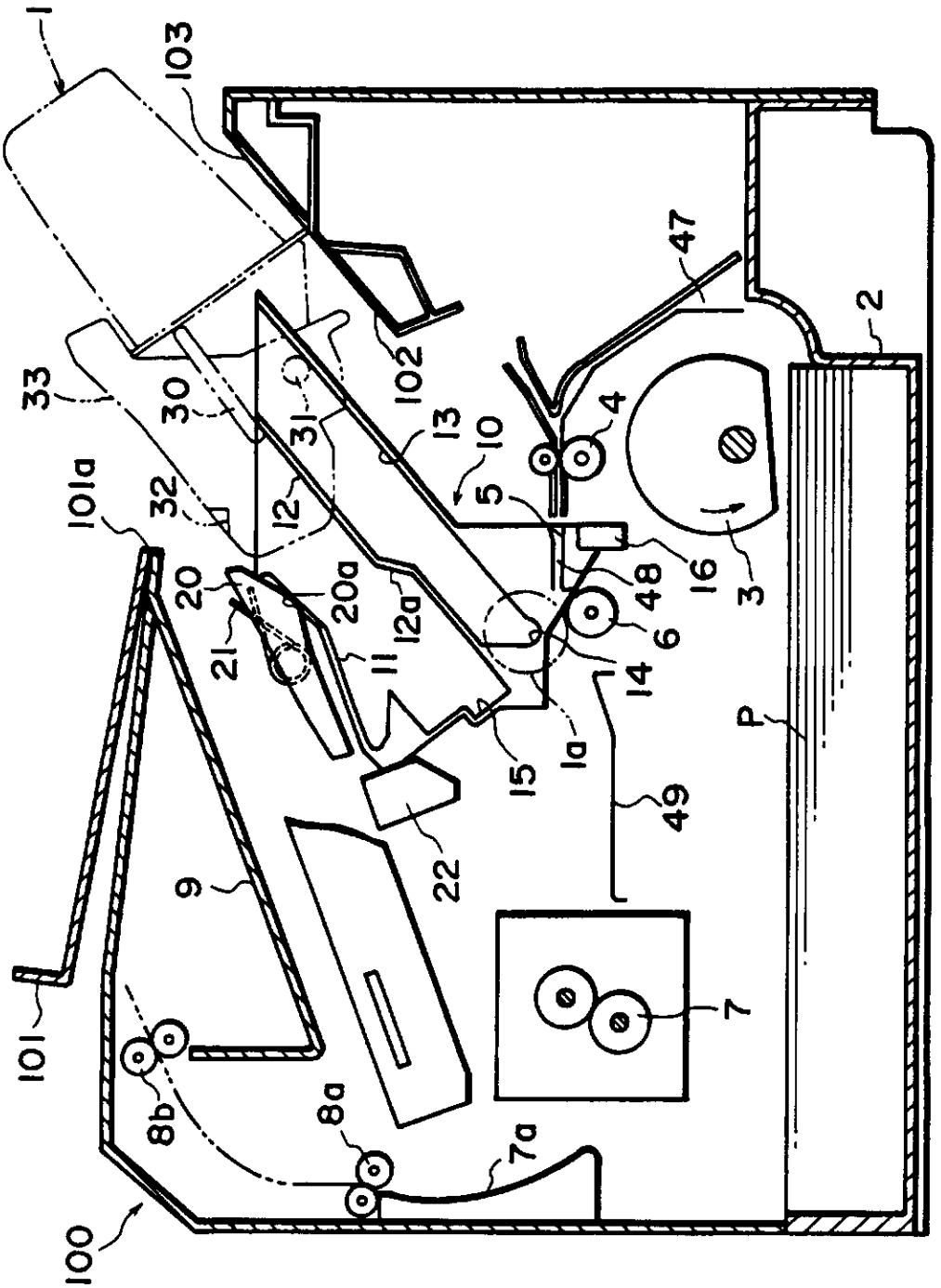
1
103
102
47
2
33
30
31
13
10
4
5
101a
32
12
48
16
3
20
20a
12a
6
21
11
14
P
15
1a
49
22
9
7
101
8b
8a
7a
100

FIG. 1

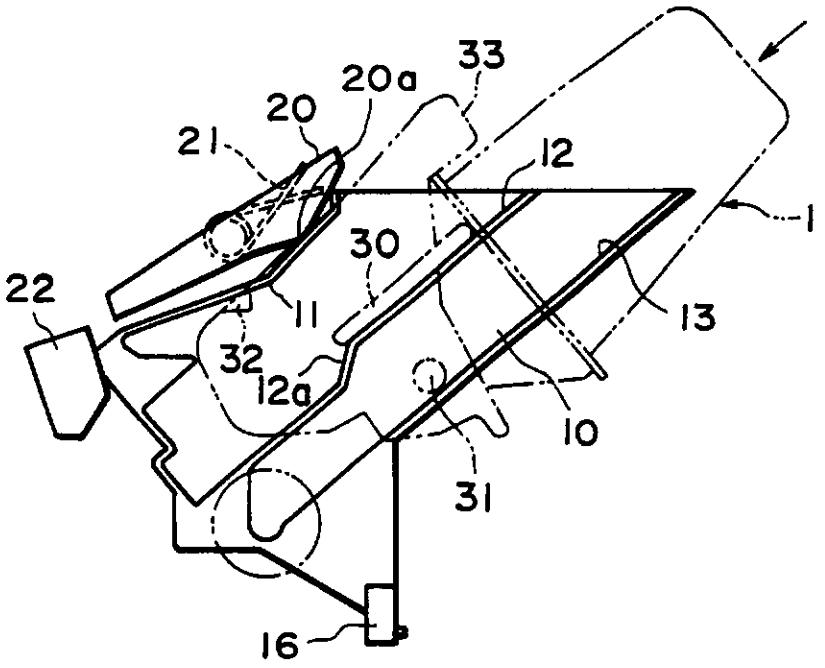
33
20a
20
21
12
1
30
22
11
13
32
12a
10
31
16

FIG. 2

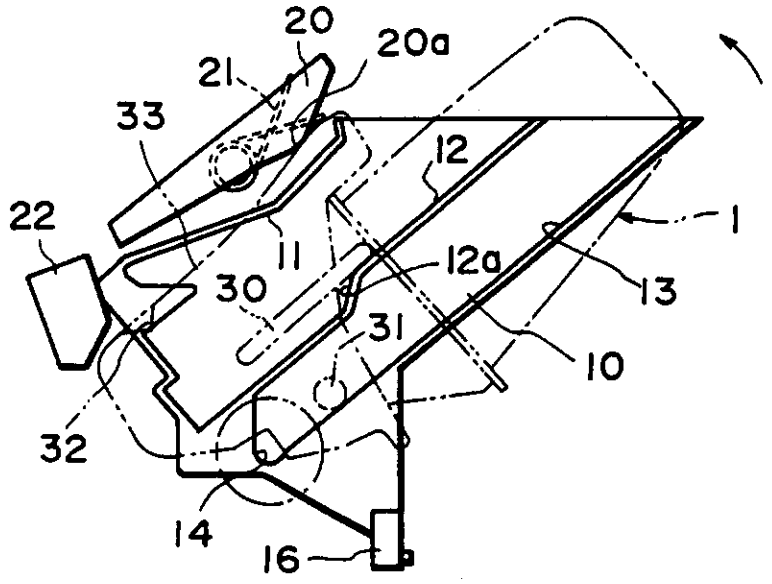
20
20a
21
33
12
22
1
11
12a
13
30
31
10
32
14
16

FIG. 3

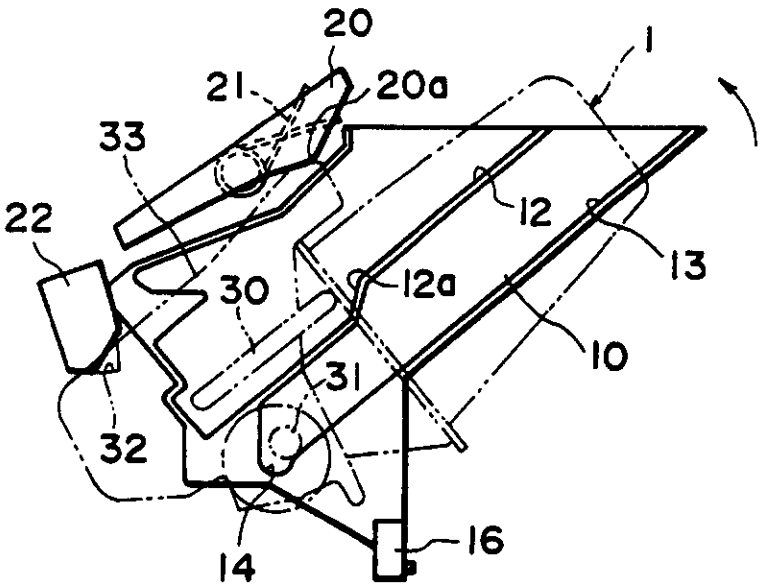
20
21
20a
1
33
12
22
13
30
12a
10
31
32
14
16

FIG. 4

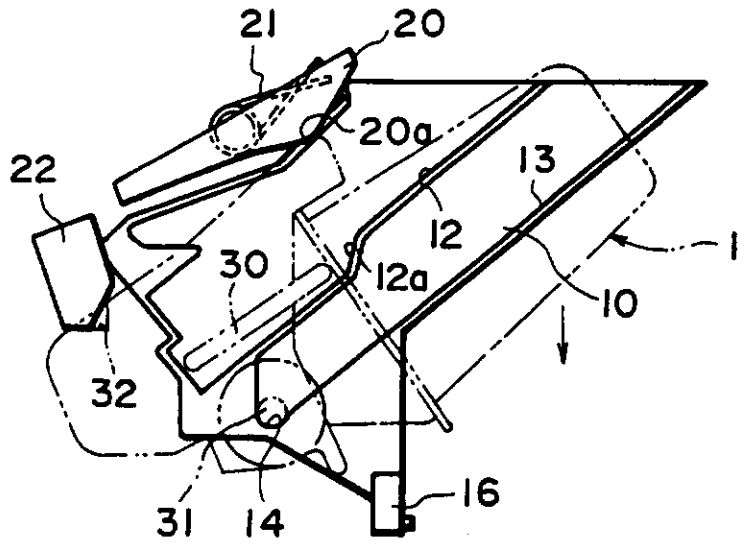
21
20
20a
22
13
12
1
30
12a
10
32
31
14
16

FIG. 5

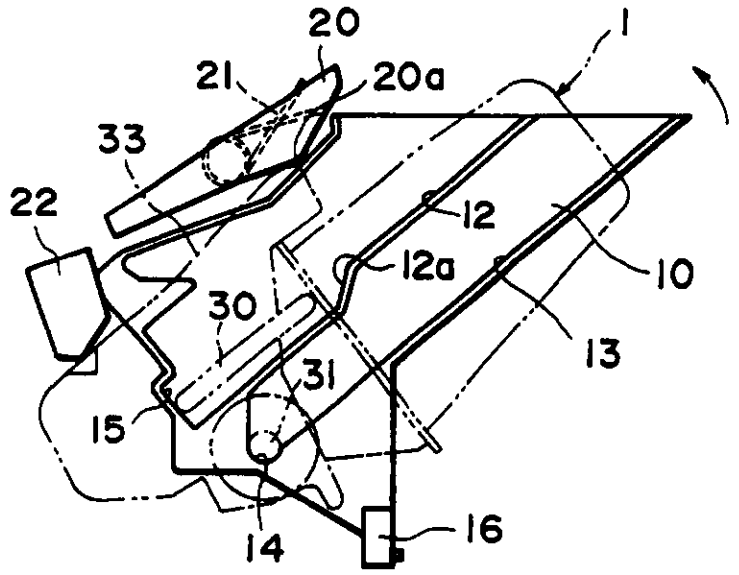
20
21
20a
1
33
22
12
12a
10
30
13
31
15
14
16

FIG. 6

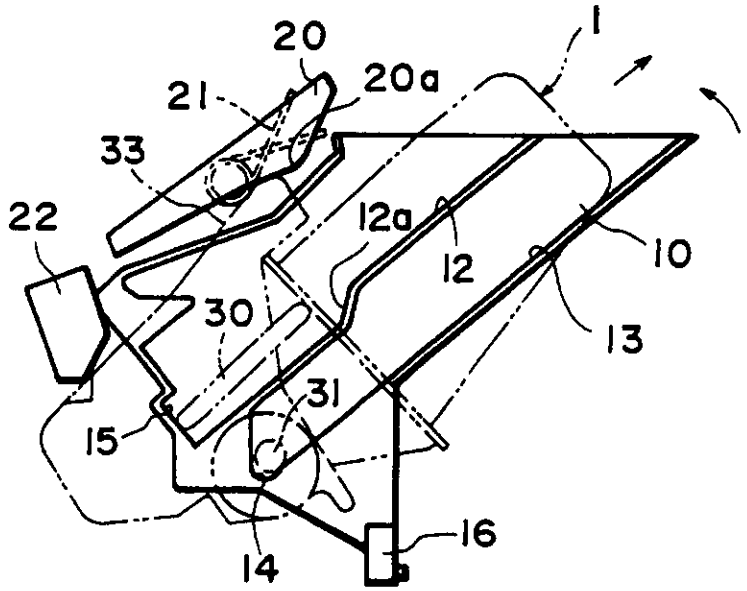
20
1
21
20a
33
22
12a
12
10
30
13
31
15
14
16

FIG. 7

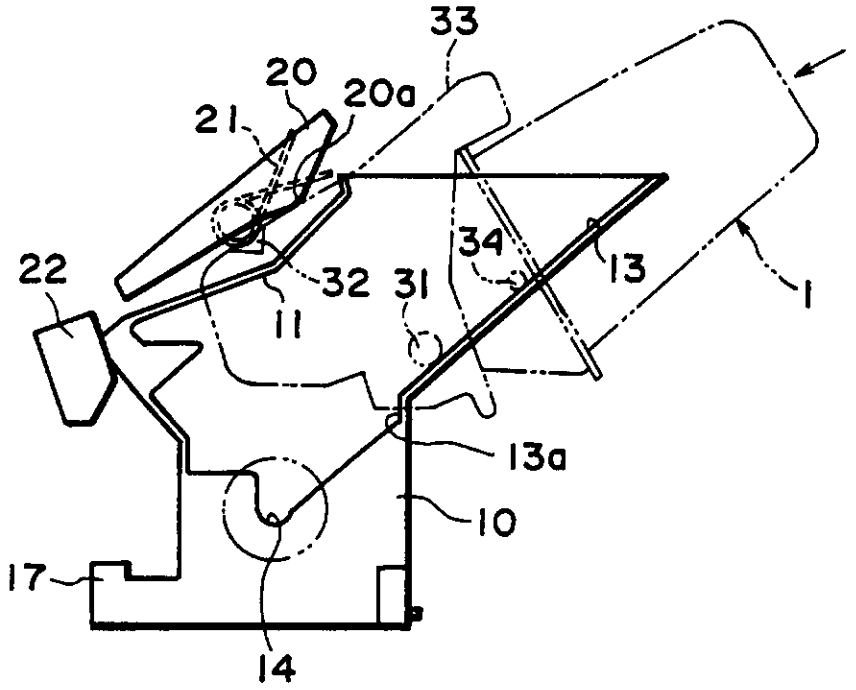
33
20
20a
21
34
22
32
31
13
1
11
13a
10
17
14

FIG. 8

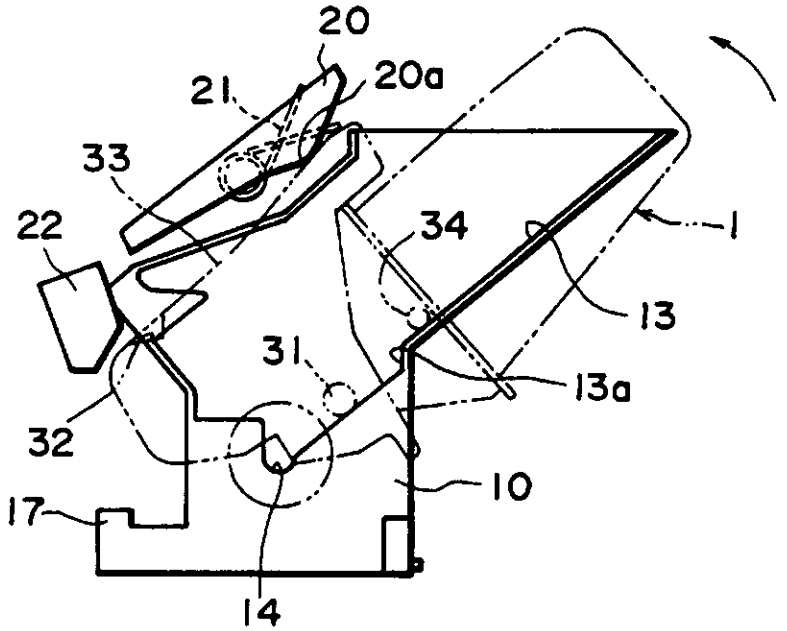
20
21
20a
33
22
34
1
13
31
13a
32
10
17
14

FIG. 9

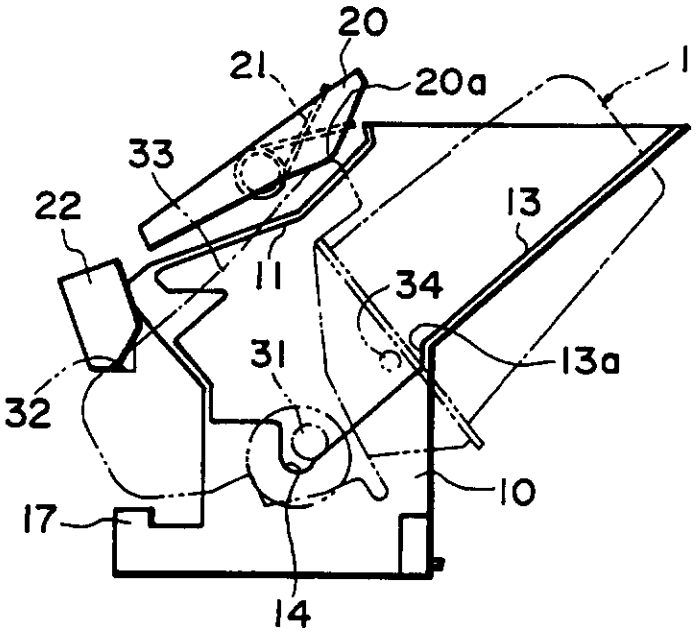
20
21
20a
1
33
22
13
11
34
31
13a
32
10
17
14

FIG. 10

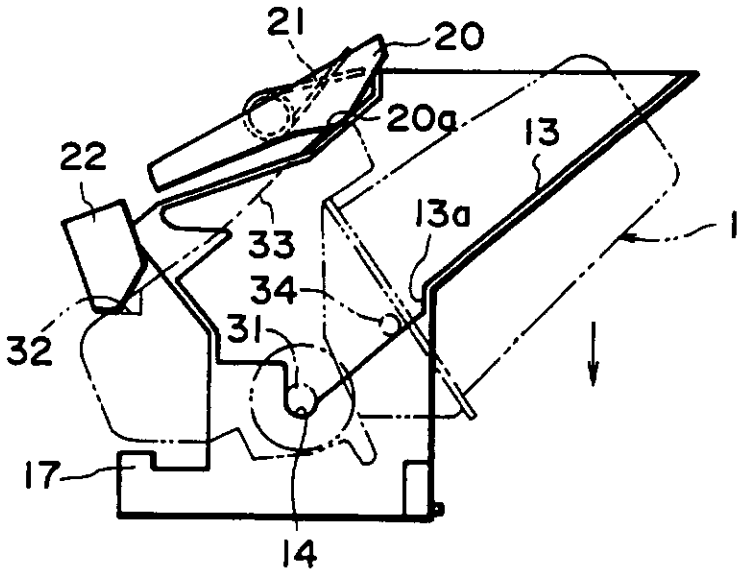
21
20
20a
13
22
13a
1
33
34
31
32
17
14

FIG. 11

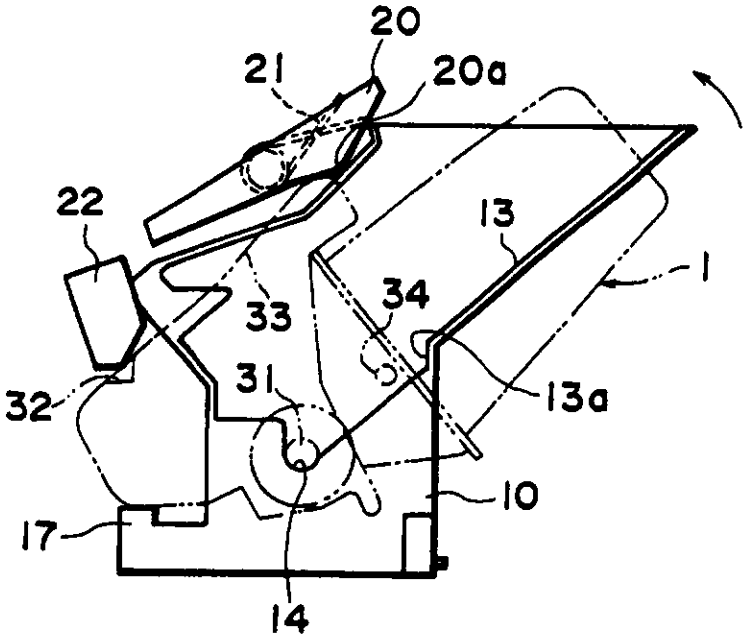
20
21
20a
22
13
1
33
34
31
13a
32
10
17
14

FIG. 12

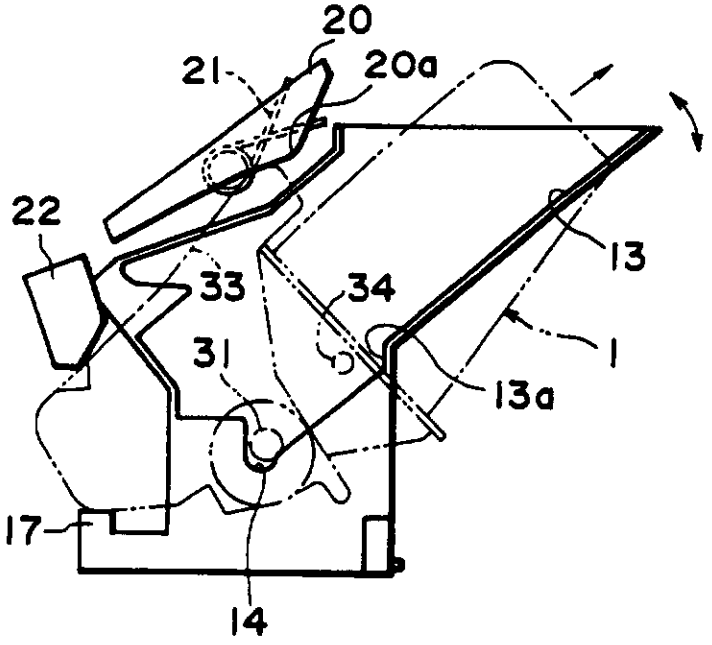
20
21
20a
22
13
33
34
1
31
13a
17
14

FIG. 13

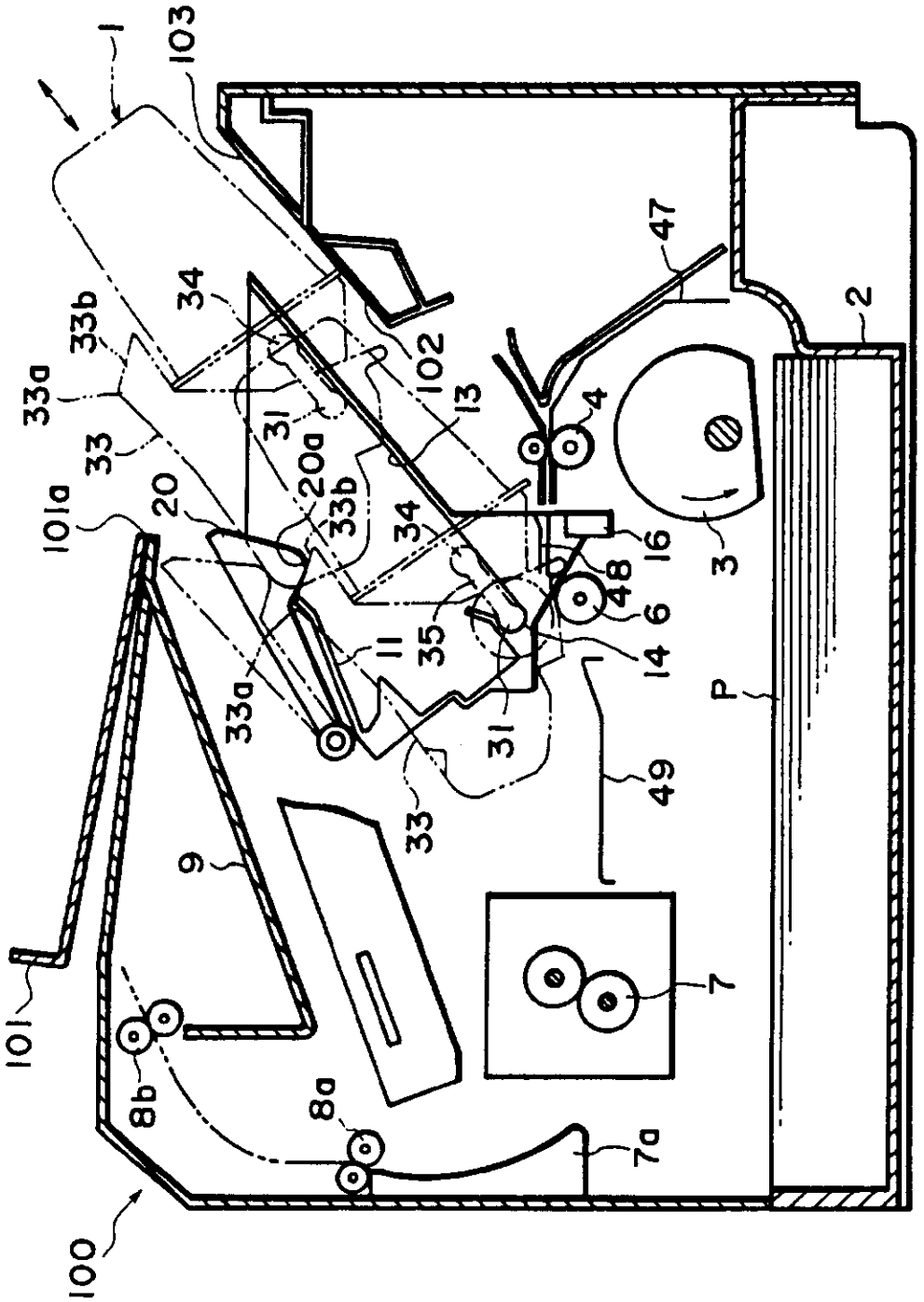
1
103
47
2
34
33b
33a
102
13
4
33
31
20a
33b
101a
20
34
16
3
48
6
35
11
14
33a
31
P
49
33
9
7
101
8b
8a
7a
100

FIG. 14

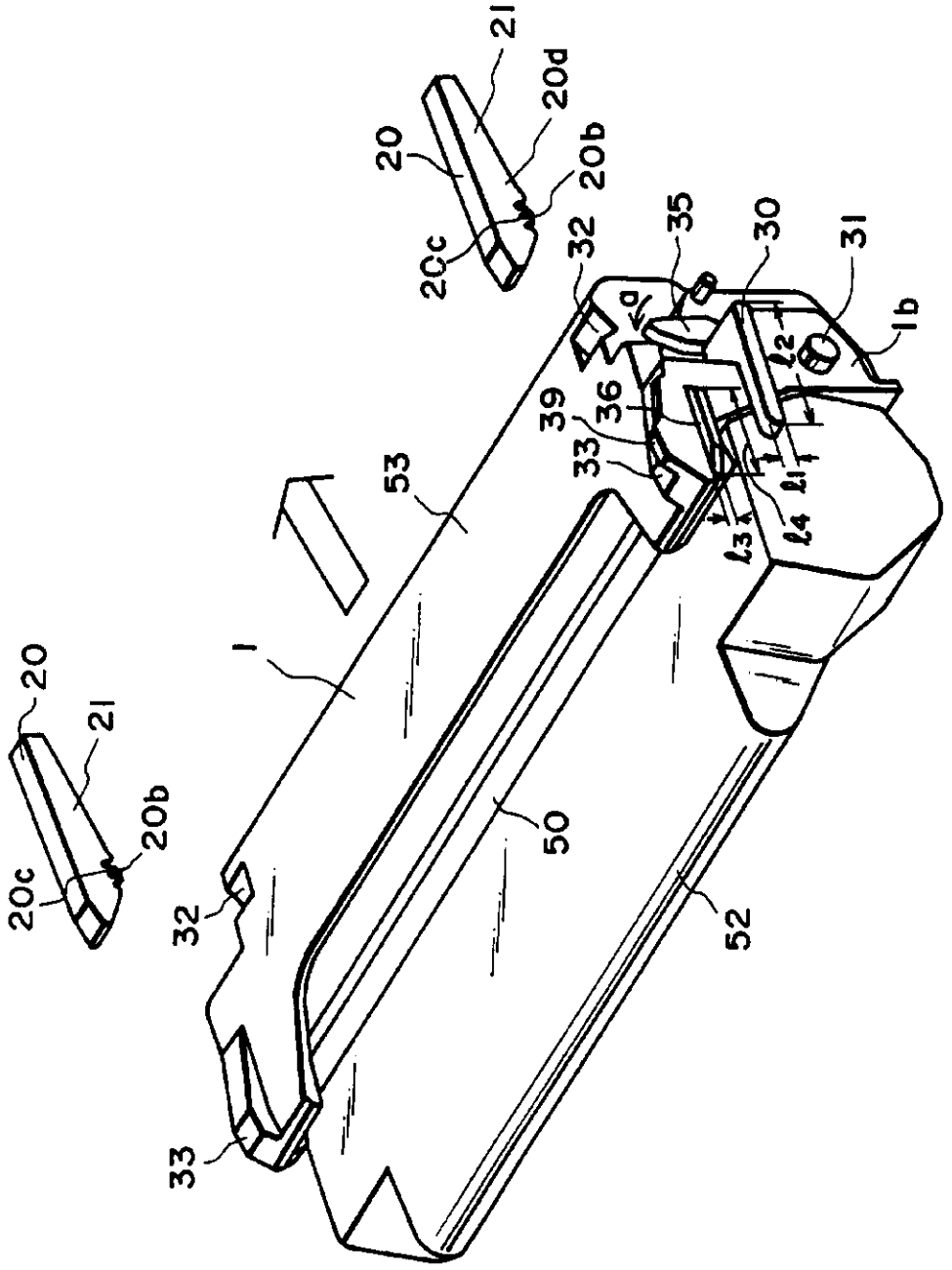
21
20d
20
20b
20c
32
35
30
31
1b
39
36
33
53
1
50
52
33
32
20
21
20b
20c

FIG. 15

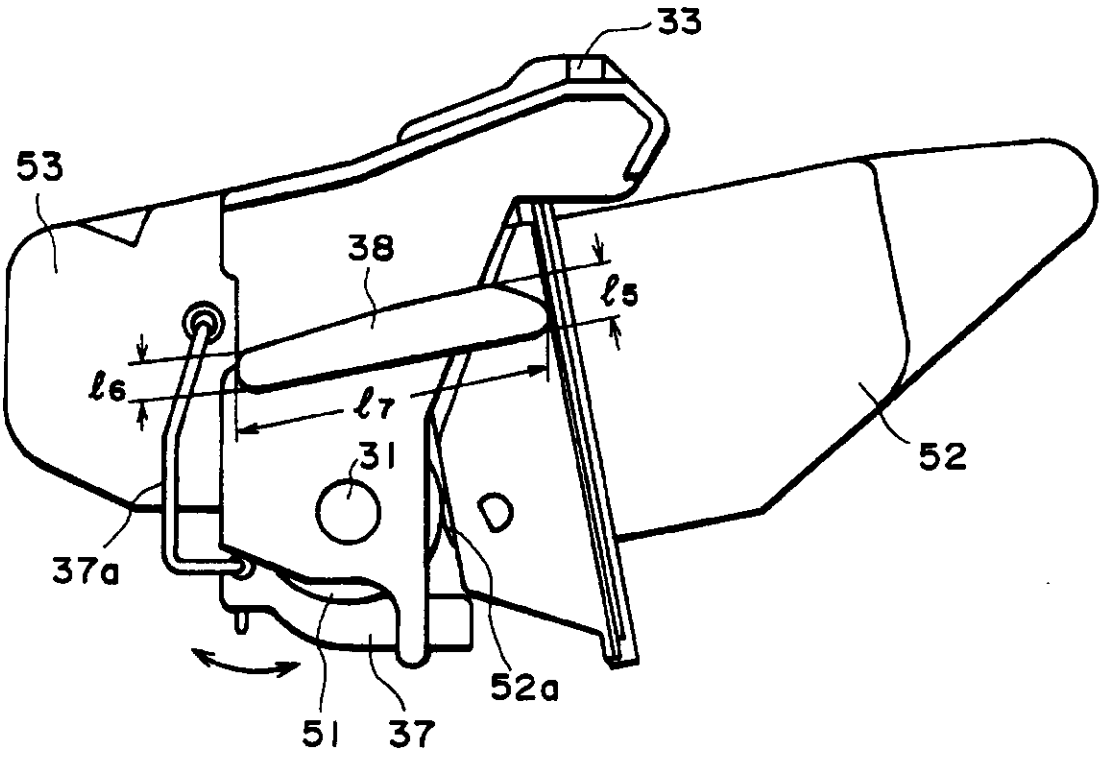

FIG. 16

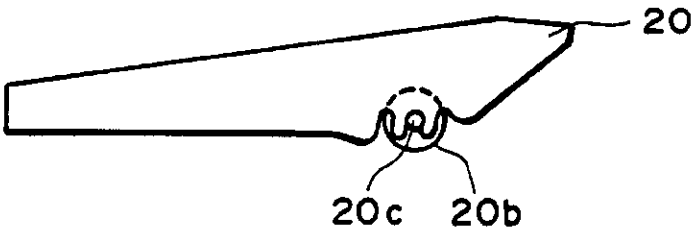

FIG. 17

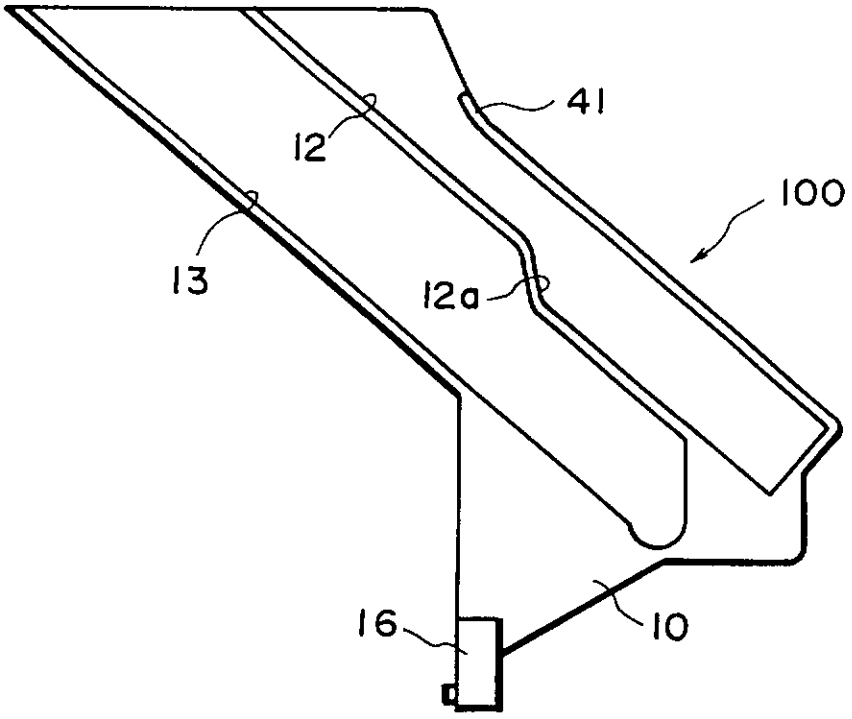

FIG. 18

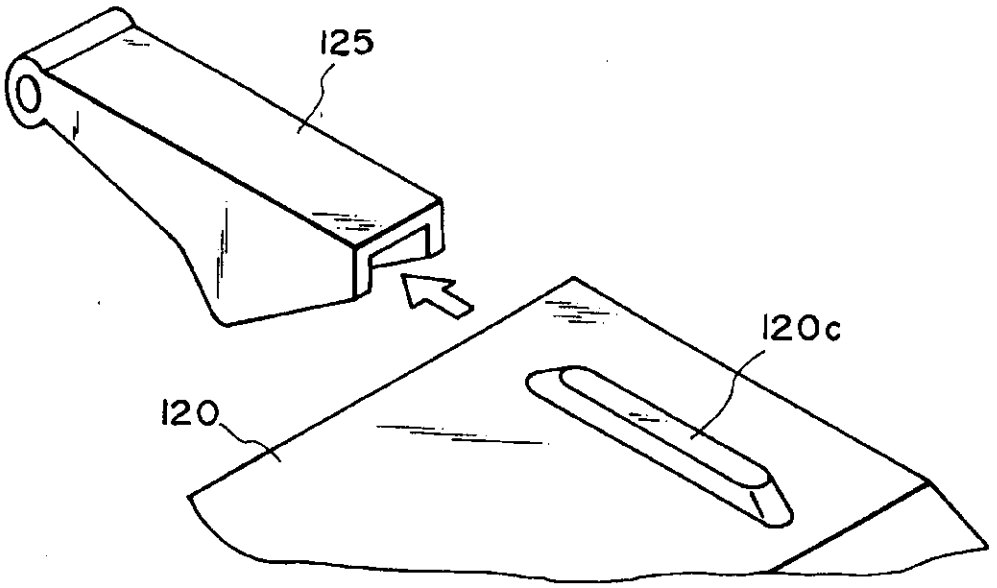
125
120c
120

FIG. 19

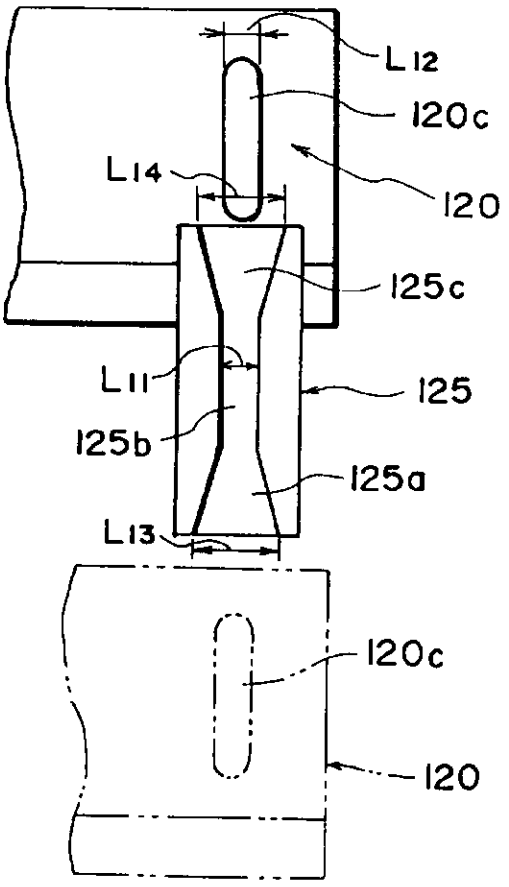
L12
120c
L14
120
125c
L11
125
125b
125a
L13
120c
120

FIG. 20

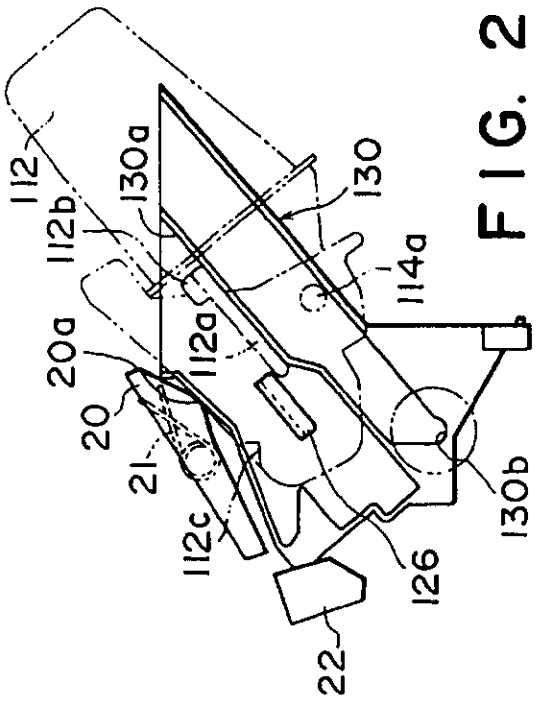

FIG. 21A

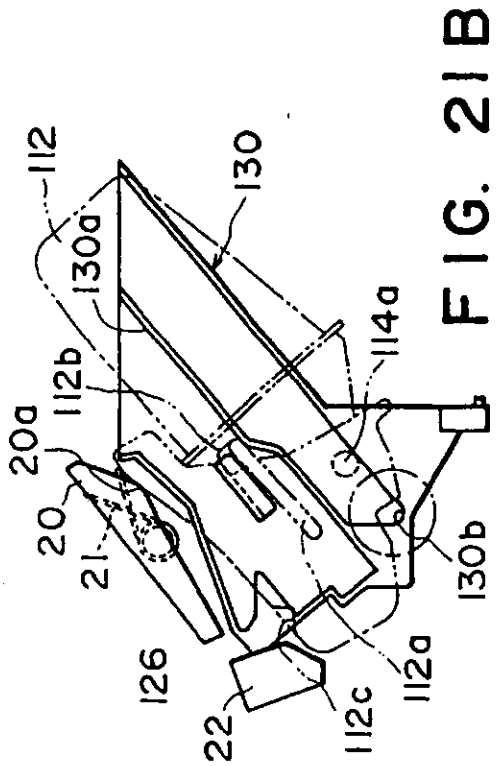

FIG. 21B

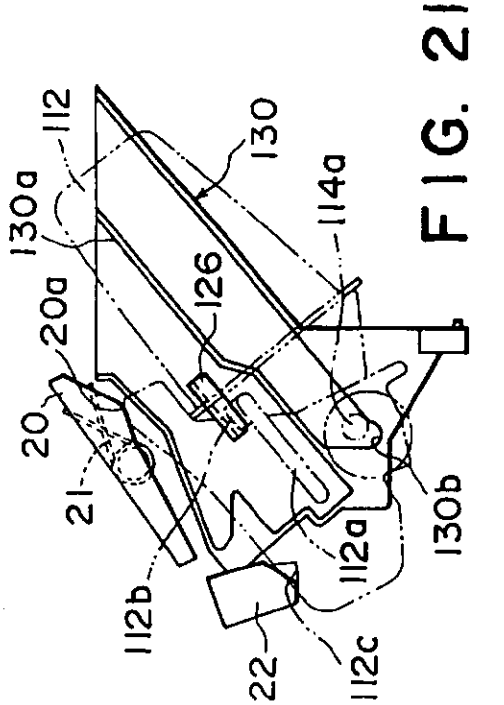

FIG. 21C

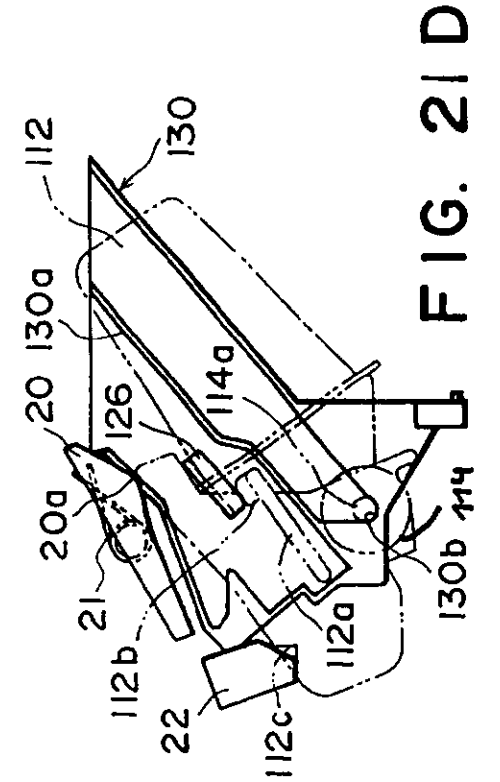

FIG. 21D

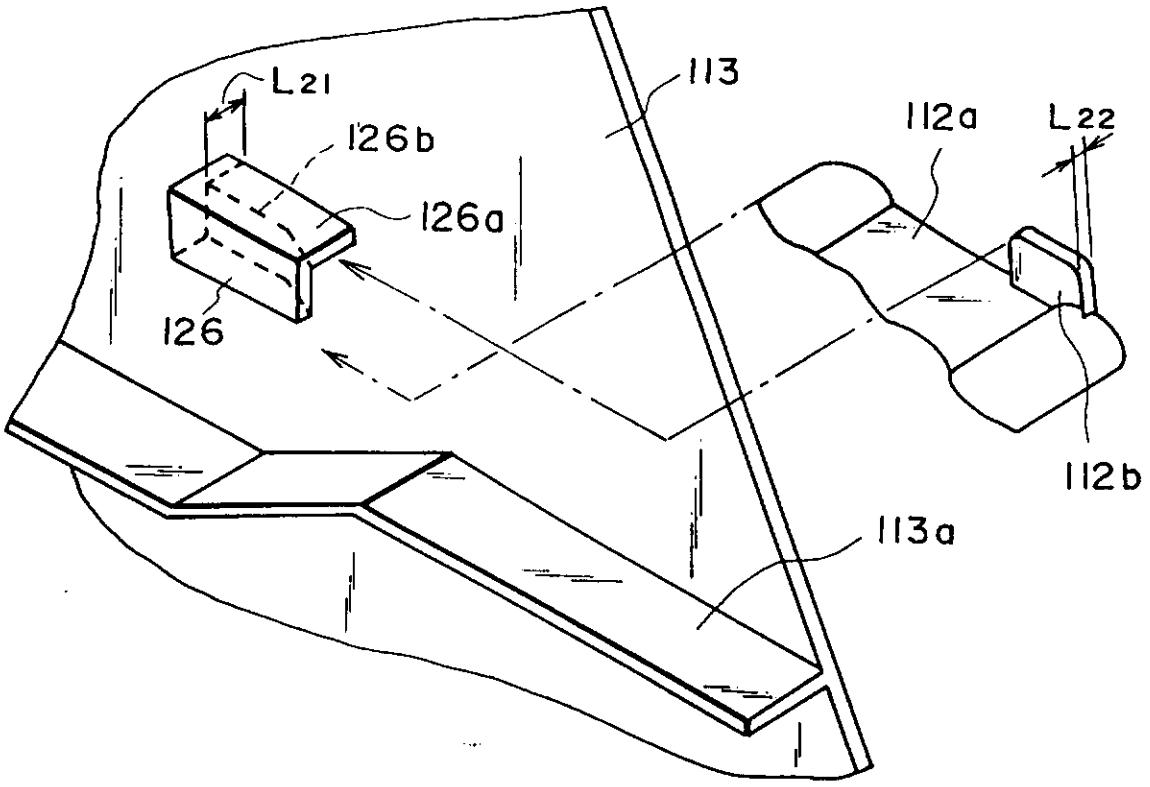
L21
126b
126a
126
113
112a
L22
112b
113a

FIG. 22

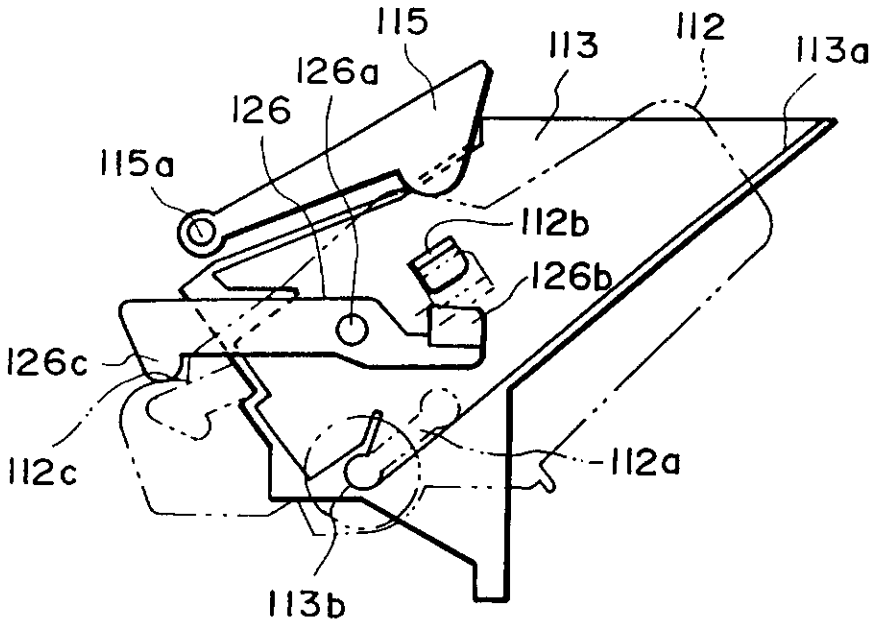
115
113
112
113a
126a
126
115a
112b
126b
126c
112c
112a
113b

FIG. 23

REGISTER ENTRY FOR EP0520802

European Application No EP92305876.2 filing date 25.06.1992

Priorities claimed:
28.06.1991 in Japan - doc: 03183933
28.02.1992 in Japan - doc: 04079243
04.06.1992 in Japan - doc: 04144484

Designated States DE FR GB IT

Title PROCESS CARTRIDGE AND IMAGE FORMING APPARATUS USABLE WITH THIS PROCESS CARTRIDGE.

Applicant/Proprietor
CANON KABUSHIKI KAISHA, 30-2, 3-chome, Shimomaruko, Ohta-ku, Tokyo, Japan
[ADP No. 50366384002]

Inventors
SHINJI GOTO, c/o Canon Kabushiki Kaisha, 3-30-2, Shimomaruko, Ohta-ku, Tokyo, Japan [ADP No. 60443736001]

JUN SAITO, c/o Canon Kabushiki Kaisha, 3-30-2, Shimomaruko, Ohta-ku, Tokyo, Japan [ADP No. 60443744001]

HIROYUKI ISHI, c/o Canon Kabushiki Kaisha, 3-30-2, Shimomaruko, Ohta-ku, Tokyo, Japan [ADP No. 60443751001]

MASAO ANDO, c/o Canon Kabushiki Kaisha, 3-30-2, Shimomaruko, Ohta-ku, Tokyo, Japan [ADP No. 60443769001]

YOSHIAKI WATANABE, c/o Canon Kabushiki Kaisha, 3-30-2, Shimomaruko, Ohta-ku, Tokyo, Japan [ADP No. 60443777001]

YUZO ISODA, c/o Canon Kabushiki Kaisha, 3-30-2, Shimomaruko, Ohta-ku, Tokyo, Japan [ADP No. 60443785001]

Classified to
G03G

Address for Service
CANON KABUSHIKI KAISHA, 30-2, 3-chome, Shimomaruko, Ohta-ku, Tokyo, Japan
[ADP No. 50366384002]

EPO Representative
KEITH DENIS LEWIS BERESFORD, BERESFORD & Co. 2-5 Warwick Court High Holborn, London WC1R 5DJ, United Kingdom [ADP No. 50583137001]

Publication No EP0520802 dated 30.12.1992
Publication in English

Examination requested 04.11.1993

Patent Granted with effect from 22.05.1996 (Section 25(1)) with title PROCESS CARTRIDGE AND IMAGE FORMING APPARATUS USABLE WITH THIS PROCESS CARTRIDGE

10.09.1993 EPO: Search report published on 13.10.1993
Entry Type 25.11 Staff ID. RD06 Auth ID. EPT

**** END OF REGISTER ENTRY ****

RENEWAL DETAILS

PUBLICATION NUMBER EP0520802

PROPRIETOR(S)

CANON KABUSHIKI KAISHA, 30-2, 3-chome, Shimomaruko, Ohta-ku, Tokyo, Japan

DATE FILED 25.06.1992

DATE GRANTED 22.05.1996

DATE NEXT RENEWAL DUE 22.08.1996

DATE NOT IN FORCE

DATE OF LAST RENEWAL

YEAR OF LAST RENEWAL 00

STATUS PATENT IN FORCE

**** END OF REPORT ****