US00D993885S

# (12) United States Design Patent

Baruchin

(10) Patent No.: US D993,885 S
(45) Date of Patent: ** *Aug. 1, 2023

(54) **GROUND STATION**

(71) Applicant: **Matternet, Inc.**, Mountain View, CA (US)

(72) Inventor: **Ido Baruchin**, San Francisco, CA (US)

(73) Assignee: **Matternet, Inc.**, Mountain View, CA (US)

( * ) Notice: This patent is subject to a terminal disclaimer.

(**) Term: **15 Years**

(21) Appl. No.: **29/819,202**

(22) Filed: **Dec. 13, 2021**

**Related U.S. Application Data**

(63) Continuation of application No. 29/727,221, filed on Mar. 9, 2020, now Pat. No. Des. 938,339.

(51) **LOC (14) Cl.** ..... **12-07**

(52) **U.S. Cl.**
USPC ..... **D12/345**; D12/400

(58) **Field of Classification Search**
USPC ..... D10/46, 65, 70; D26/1–4, 88, 129, 130, D26/131, 132, 135; D14/230–238, 299, D14/358; D7/669; D4/114, 135; D12/400
CPC ..... A47J 37/106; B01L 3/021
See application file for complete search history.

(56) **References Cited**

U.S. PATENT DOCUMENTS

| | | | |
|---|---|---|---|
| 5,720,330 | A | 2/1998 | Schmalz, Jr. |
| D401,593 | S | 11/1998 | Nishimura et al. |
| D421,439 | S | 3/2000 | Giuntoli |
| D442,947 | S | 5/2001 | Warner et al. |
| 6,575,204 | B1 | 6/2003 | Godfrey et al. |
| D521,327 | S | 5/2006 | Neal et al. |
| D531,626 | S | 11/2006 | Agrawal et al. |
| D625,299 | S | 10/2010 | Kits et al. |
| D626,667 | S | 11/2010 | Jonsson et al. |

(Continued)

FOREIGN PATENT DOCUMENTS

| | | |
|---|---|---|
| CN | 207759025 U | 8/2018 |

OTHER PUBLICATIONS

International Search Report and Written Opinion received for PCT Patent Application No. PCT/US2021/021396, dated Jun. 11, 2021, 12 pages.

(Continued)

*Primary Examiner* — Susan E Krakower
*Assistant Examiner* — Jerry Shiuan-Hua Hsu
(74) *Attorney, Agent, or Firm* — DLA Piper LLP (US)

(57) **CLAIM**

The ornamental design for a ground station, as shown and described.

**DESCRIPTION**

FIG. **1** is a top, front and right perspective view of a ground station showing our new design;
FIG. **2** is a front elevation view of the ground station of FIG. **1**;
FIG. **3** is a rear elevation view of the ground station of FIG. **1**;
FIG. **4** is a left side elevation view of the ground station of FIG. **1**;
FIG. **5** is a right side elevation view of the ground station of FIG. **1**;
FIG. **6** is a top plan view of the ground station of FIG. **1**;
FIG. **7** is a bottom plan view of the ground station of FIG. **1**; and,
FIG. **8** is a top, front and left side perspective view of the ground station of FIG. **1**.

(Continued)

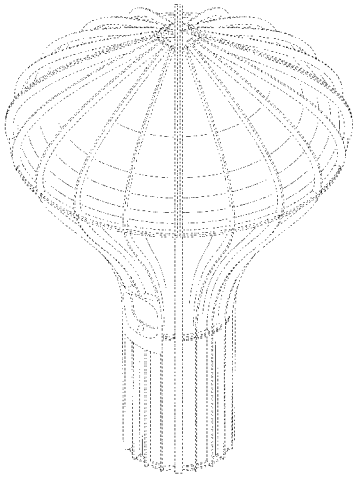

The broken lines illustrate portions of the ground station that form no part of the claimed design.

**1 Claim, 8 Drawing Sheets**

(56) **References Cited**

U.S. PATENT DOCUMENTS

| | | | | | |
|---|---|---|---|---|---|
| D651,327 | S | | 12/2011 | Hsiao et al. | |
| D676,583 | S | | 2/2013 | Holland et al. | |
| D676,984 | S | | 2/2013 | Holland et al. | |
| D836,802 | S | | 12/2018 | Armitage et al. | |
| D857,278 | S | | 8/2019 | Luo | |
| D868,721 | S | * | 12/2019 | Britz | D14/240 |
| D893,765 | S | | 8/2020 | Yang et al. | |
| D895,853 | S | | 9/2020 | Lin | |
| D896,667 | S | | 9/2020 | Chapman et al. | |
| D897,564 | S | * | 9/2020 | Chen | D26/2 |
| D905,875 | S | * | 12/2020 | Choi | D26/2 |
| D926,057 | S | * | 7/2021 | Moses | D10/70 |
| D938,339 | S | * | 12/2021 | Baruchin | D12/345 |
| 2014/0188435 | A1 | | 7/2014 | Coombs et al. | |
| 2016/0244187 | A1 | | 8/2016 | Byers et al. | |
| 2017/0129603 | A1 | | 5/2017 | Raptopoulos et al. | |
| 2018/0148170 | A1 | | 5/2018 | Stamatovski | |
| 2019/0193952 | A1 | | 6/2019 | Zevenbergen et al. | |

OTHER PUBLICATIONS

Non-Final Office Action received for U.S. Appl. No. 29/727,221, dated Mar. 2, 2021, 10 pages.

* cited by examiner

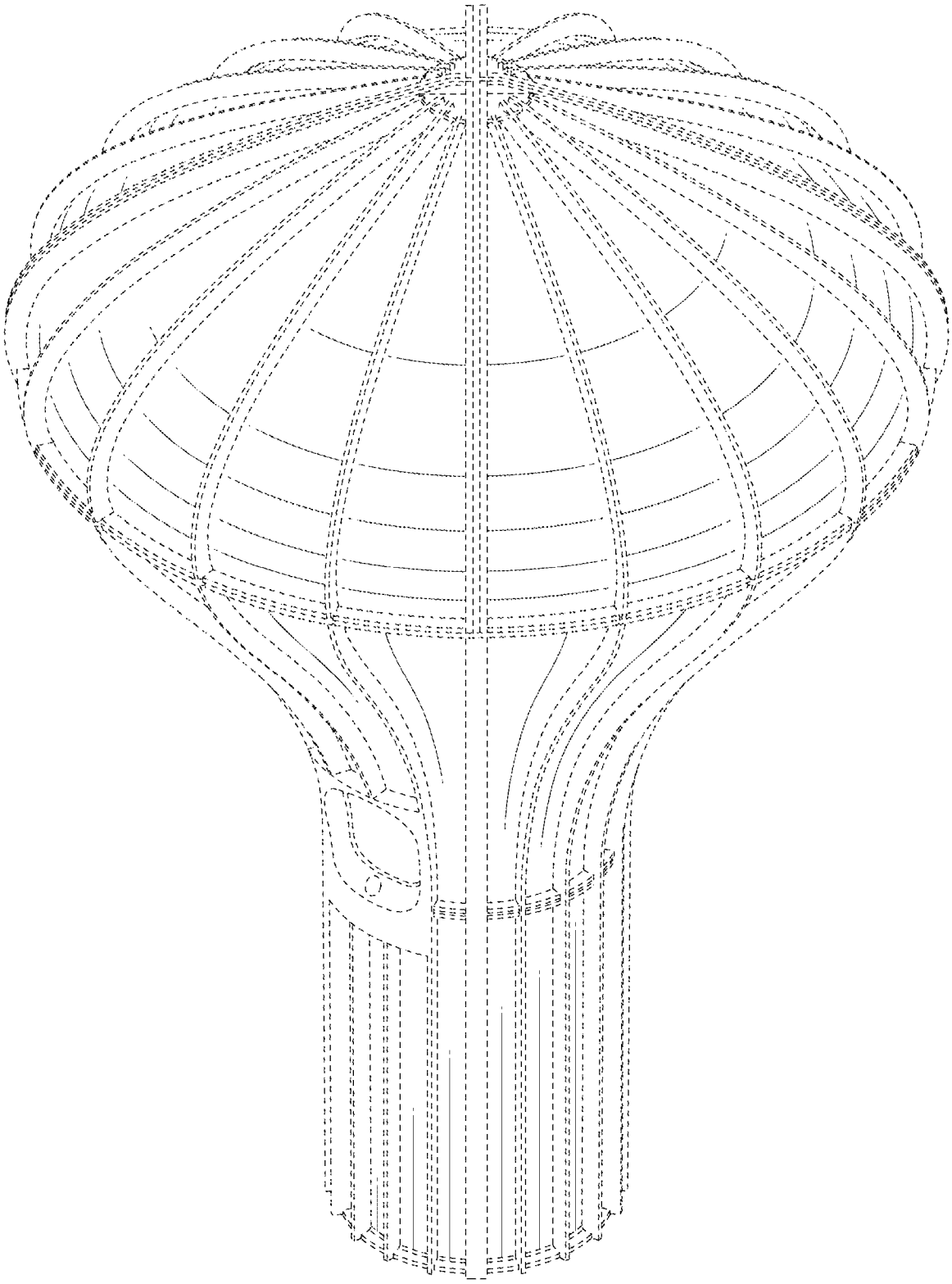

FIG. 1

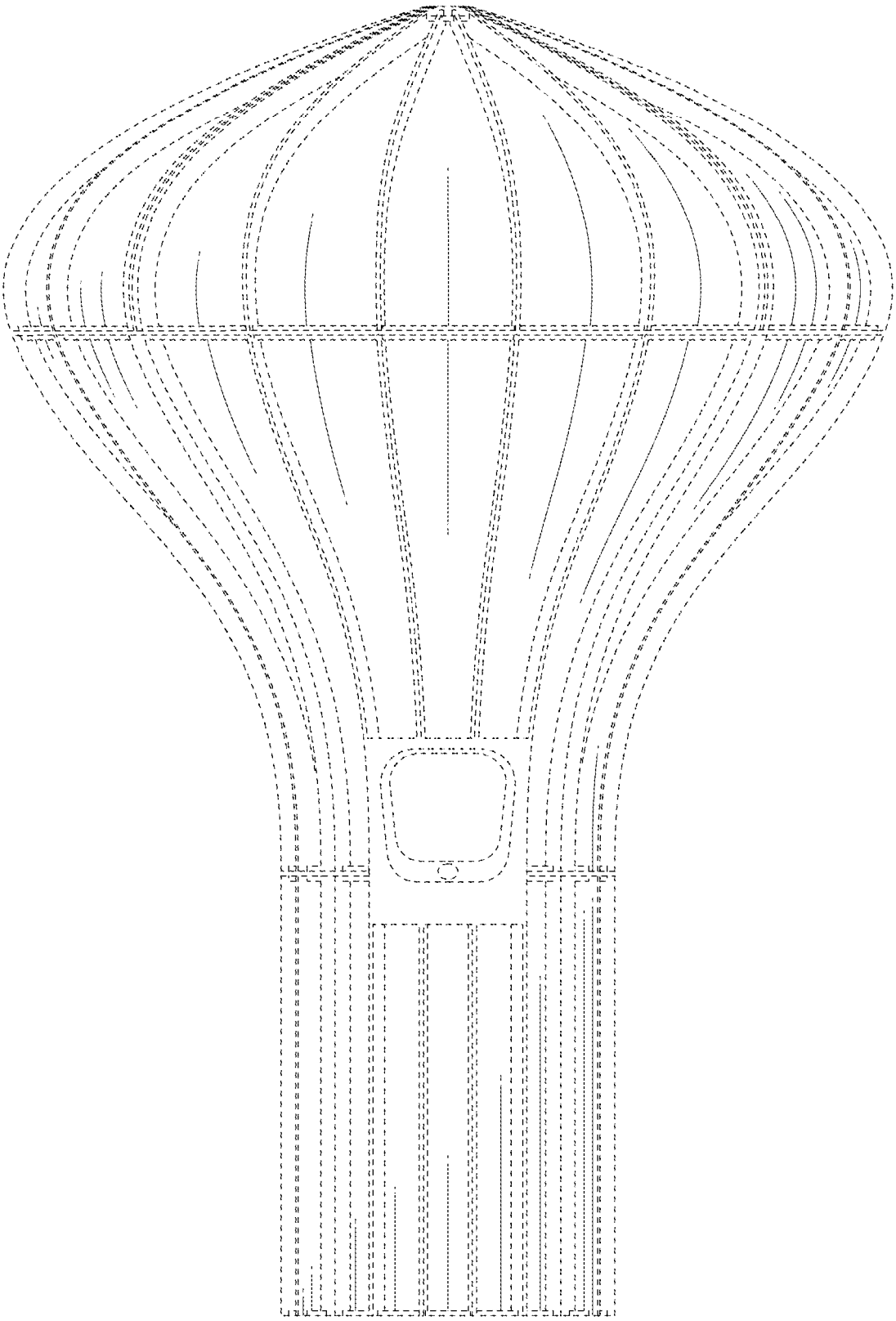

FIG. 2

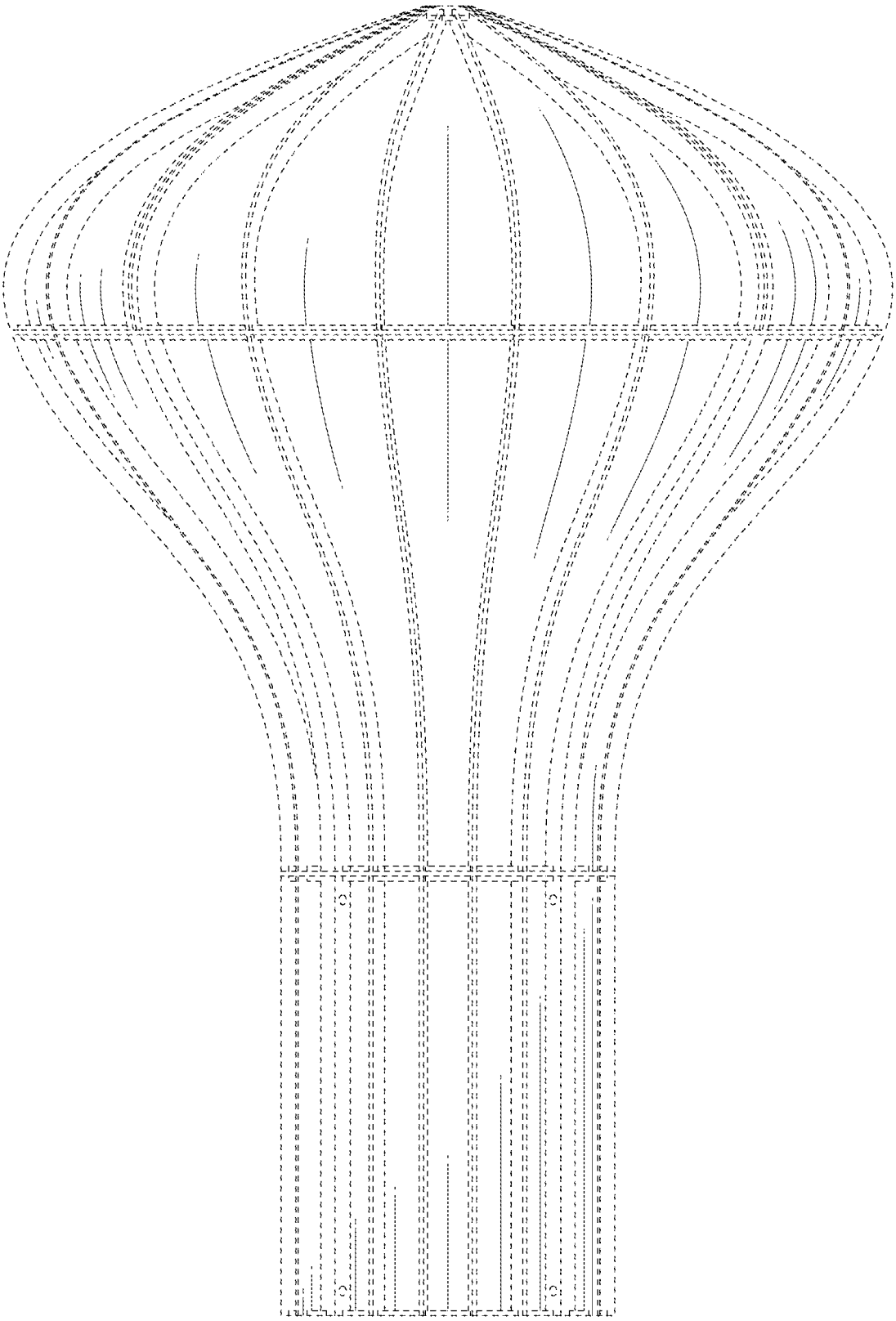

FIG. 3

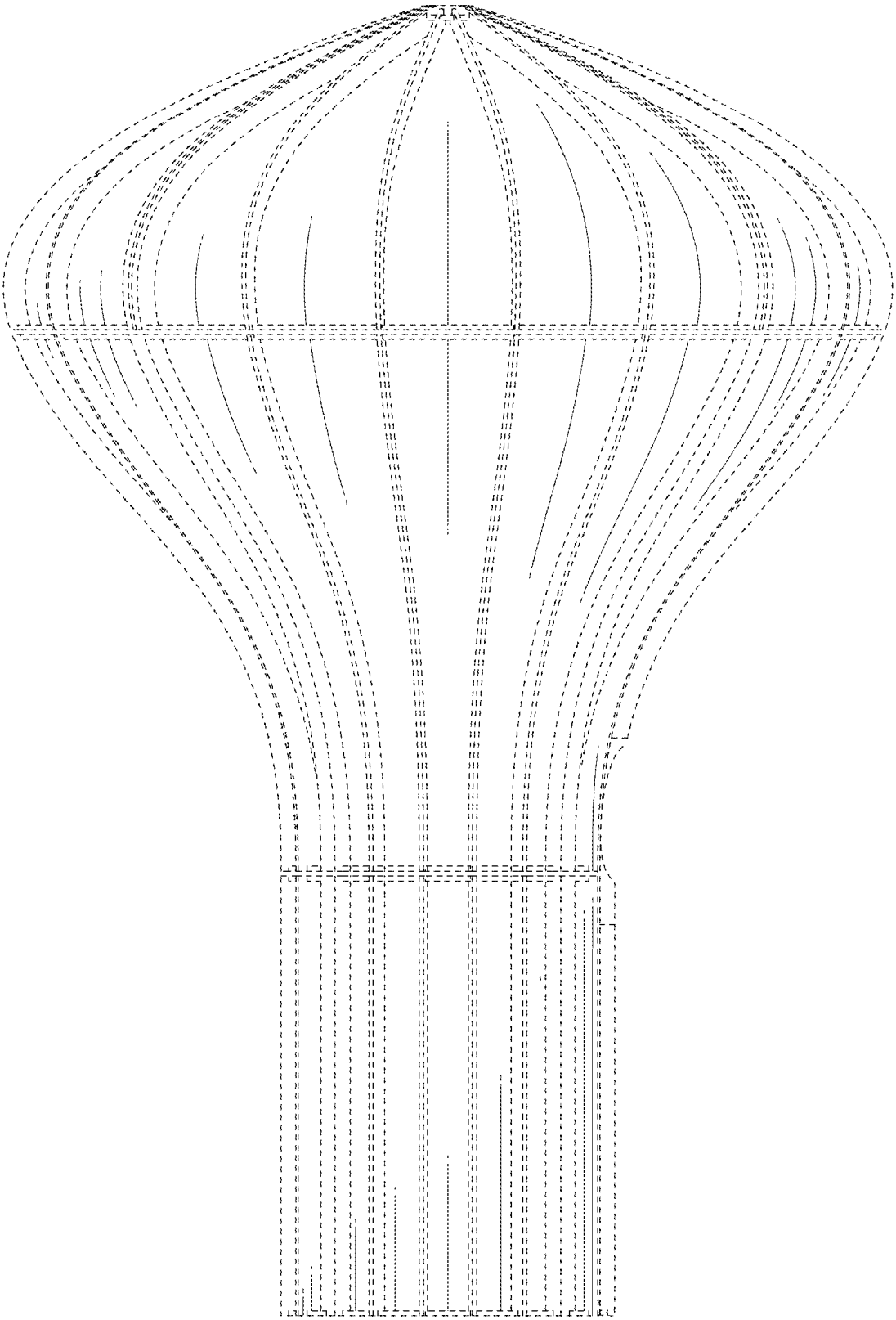

FIG. 4

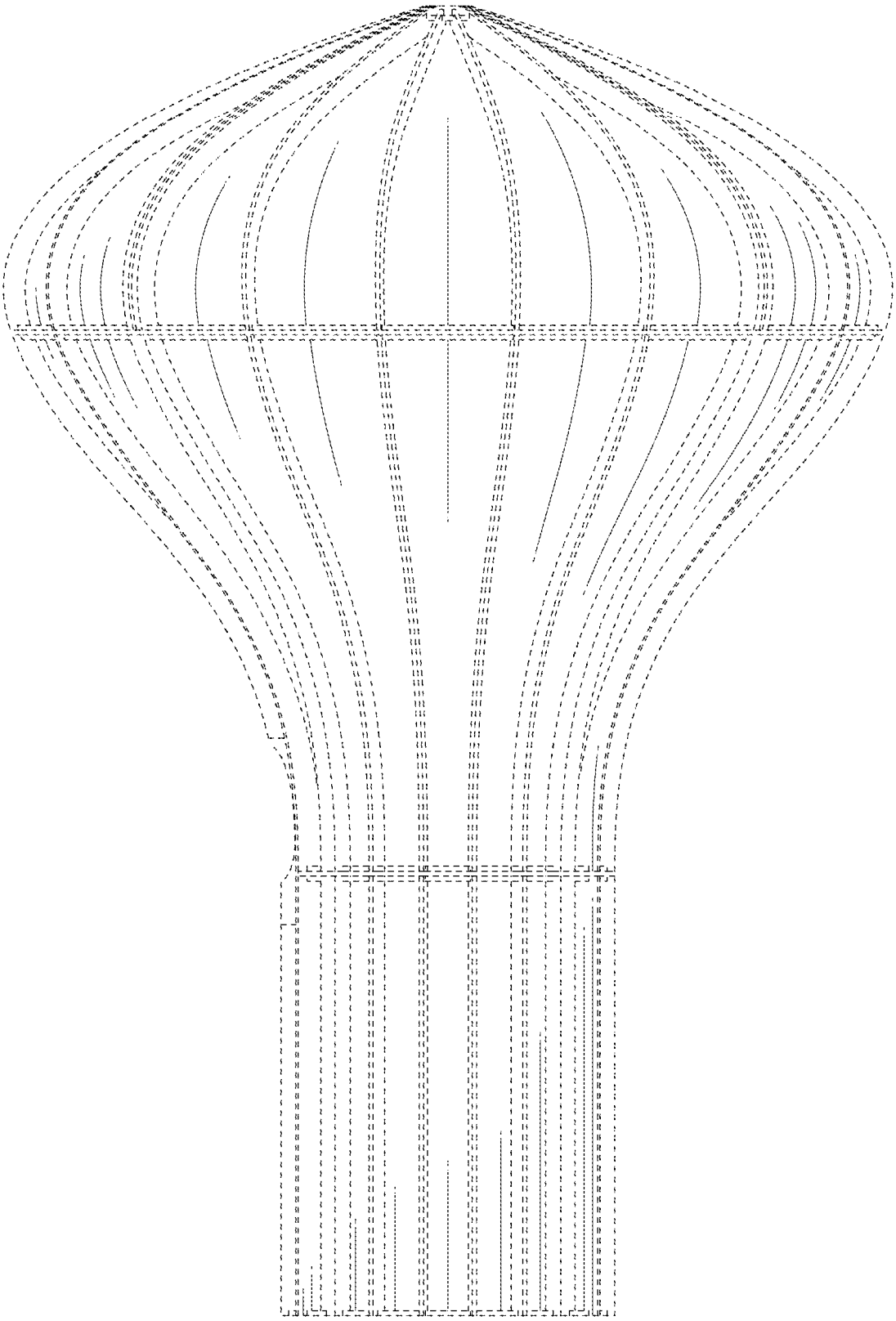

FIG. 5

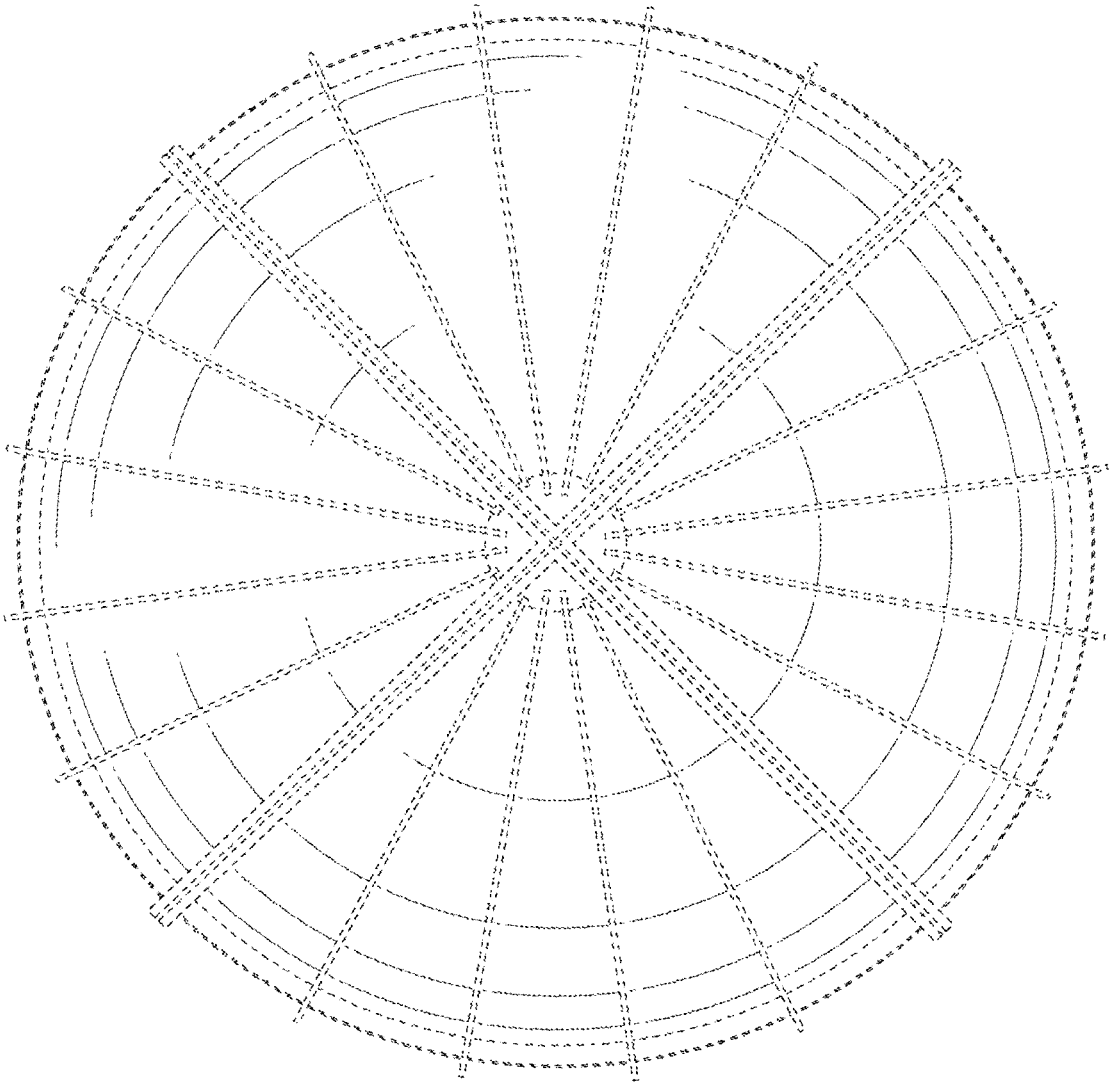

FIG. 6

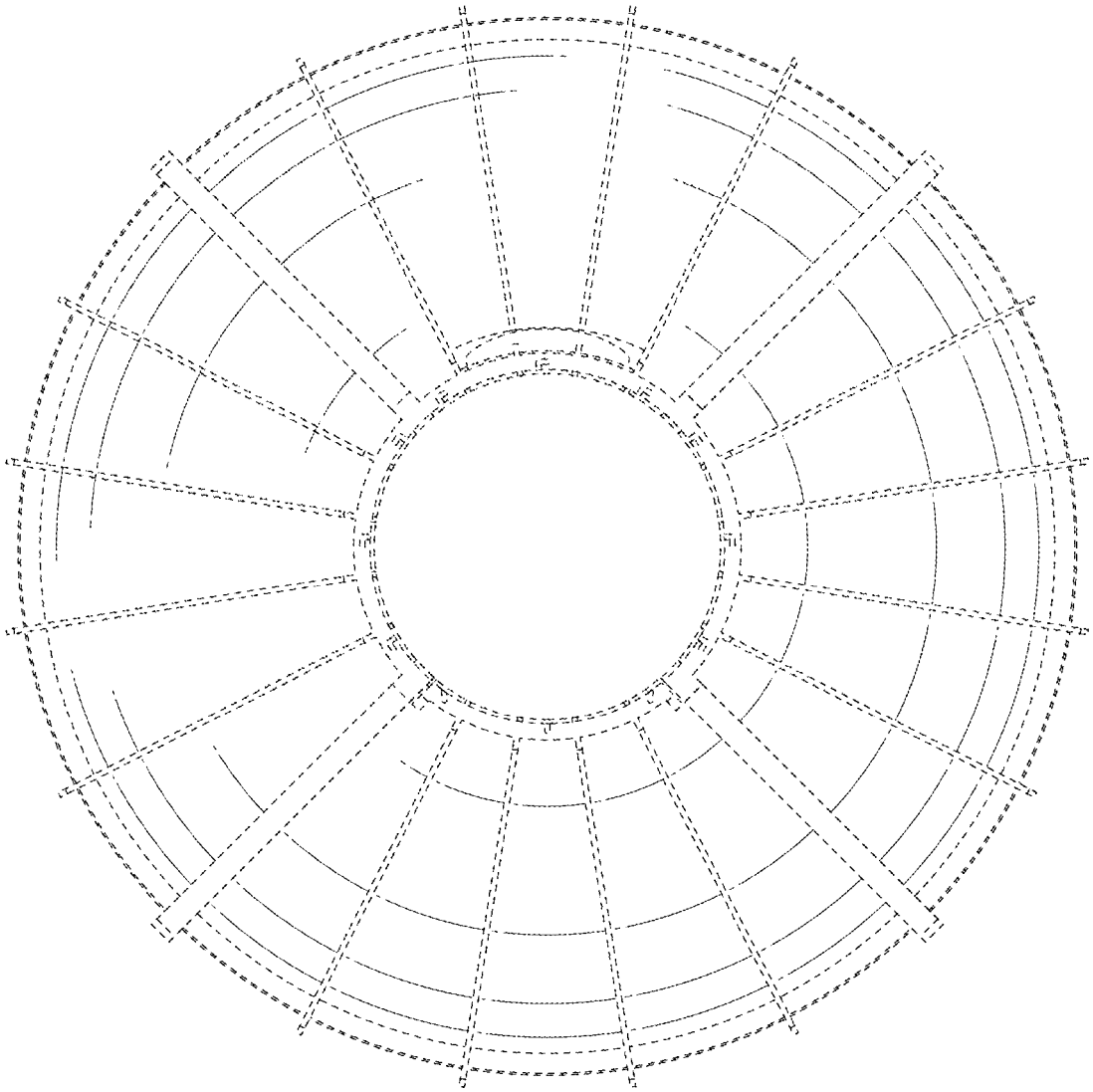

FIG. 7

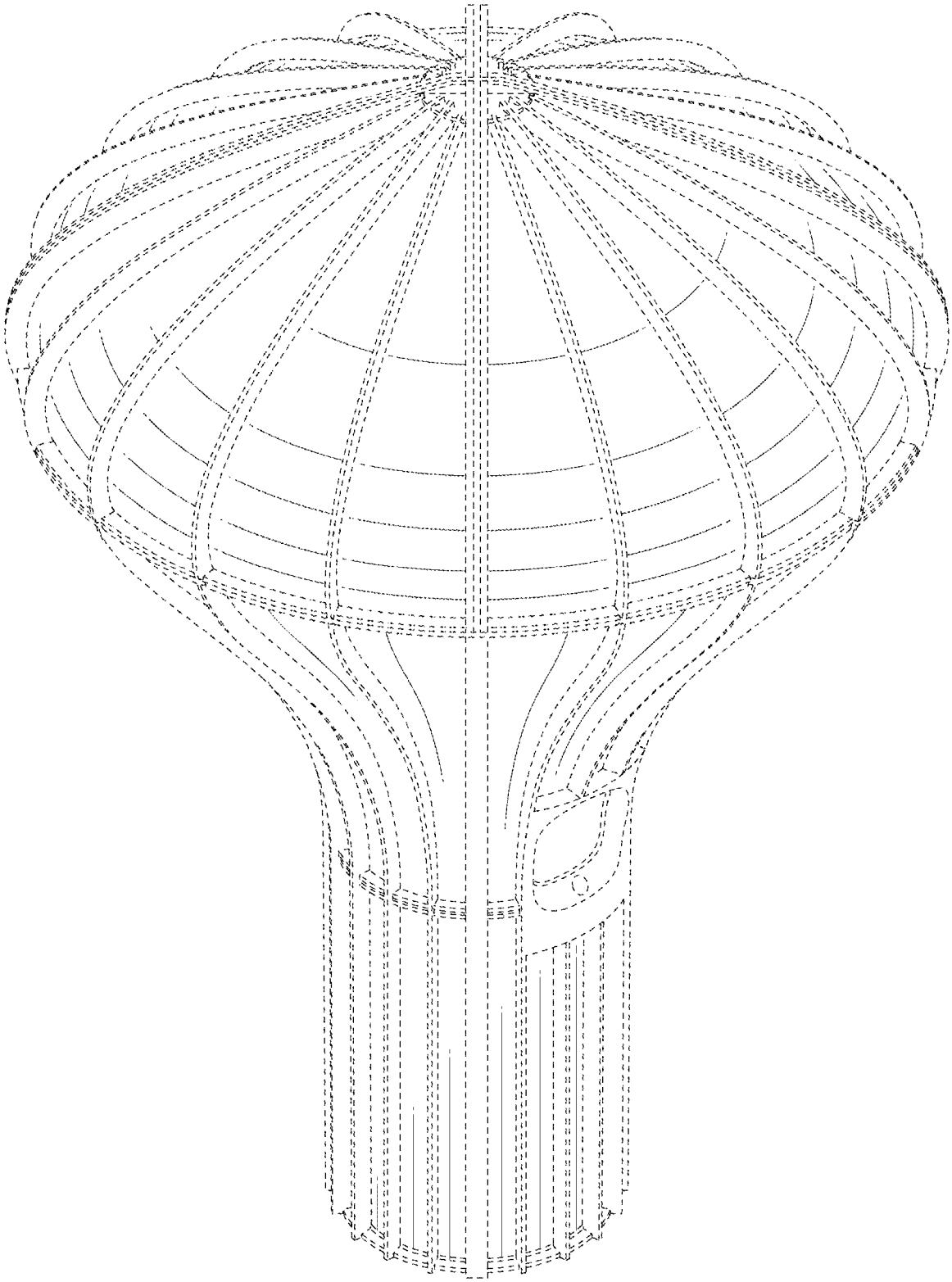

FIG. 8